# TRB140

v1.1

Copyright © 2025, UAB TELTONIKA NETWORKS. Specifications and information given in this document are subject to change by UAB TELTONIKA NETWORKS without prior notice.

# HARDWARE

## FRONT VIEW

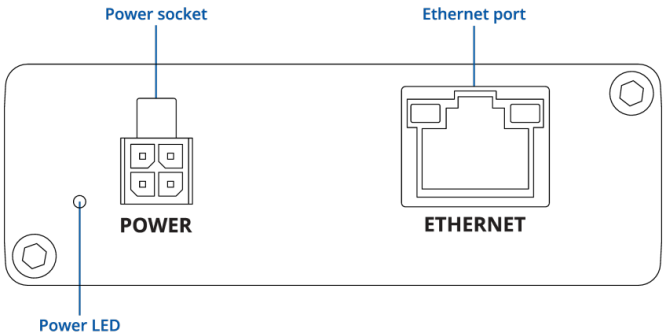


## BACK VIEW

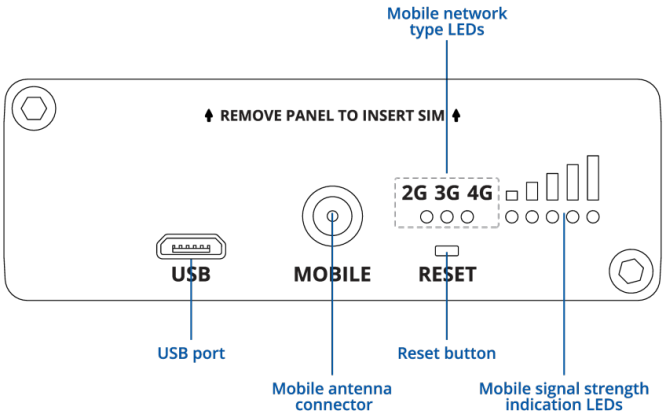


## POWER SOCKET PINOUT

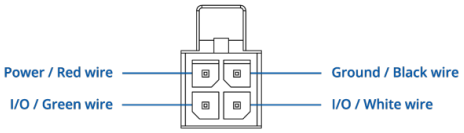


Copyright © 2025, UAB TELTONIKA NETWORKS. Specifications and information given in this document are subject to change by UAB TELTONIKA NETWORKS without prior notice.

## FEATURES

### Mobile

| | |
|---|---|
| **Mobile module** | 4G LTE Cat 4 up to 150 DL/50 UL Mbps; 3G up to 21 DL/5.76 UL Mbps; 2G up to 236.8 DL/236.8 UL kbps |
| **3GPP Release** | Release 11 |
| **Status** | IMSI, ICCID, operator, operator state, data connection state, network type, bandwidth, connected band, signal strength (RSSI), SINR, RSRP, RSRQ, EC/IO, RSCP, data sent/received, LAC, TAC, cell ID, ARFCN, UARFCN, EARFCN, MCC, and MNC |
| **SMS** | SMS status, SMS configuration, EMAIL to SMS, SMS to EMAIL, SMS to HTTP, SMS to SMS, scheduled SMS, SMS autoreply, SMPP |
| **USSD** | Supports sending and reading Unstructured Supplementary Service Data messages |
| **Block/Allow list** | Operator block/allow list (by country or separate operators) |
| **Multiple PDN** | Possibility to use different PDNs for multiple network access and services |
| **Band management** | Band lock, Used band status display |
| **SIM PIN code management** | SIM PIN code management enables setting, changing, or disabling the SIM card's PIN |
| **APN** | Auto APN |
| **Bridge** | Direct connection (bridge) between mobile ISP and device on LAN |
| **Passthrough** | Gateway assigns its mobile WAN IP address to another device on LAN |

### Ethernet

| | |
|---|---|
| **ETH** | 1 x ETH port, 10/100/1000 Mbps, compliance with IEEE 802.3, IEEE 802.3u, 802.3az standards, supports auto MDI/MDIX crossover |

Copyright © 2025, UAB TELTONIKA NETWORKS. Specifications and information given in this document are subject to change by UAB TELTONIKA NETWORKS without prior notice.

## Network

| | |
|---|---|
| **Routing** | Static routing |
| **Network protocols** | TCP, UDP, IPv4, IPv6, ICMP, NTP, DNS, HTTP, HTTPS, SFTP, FTP, SMTP, SSL/TLS, ARP, VRRP, PPP, PPPoE, UPNP, SSH, DHCP, Telnet, SMPP, SNMP, MQTT, Wake On Lan (WOL), VXLAN |
| **VoIP passthrough support** | H.323 and SIP-alg protocol NAT helpers, allowing proper routing of VoIP packets |
| **Connection monitoring** | Ping Reboot, Wget Reboot, Periodic Reboot, LCP and ICMP for link inspection |
| **Firewall** | Port forward, traffic rules, custom rules, TTL target customisation |
| **Firewall status page** | View all your Firewall statistics, rules, and rule counters |
| **Ports management** | View device ports, enable and disable each of them, turn auto-configuration on or off, change their transmission speed, and so on |
| **Network topology** | Visual representation of your network, showing which devices are connected to which other devices |
| **Hotspot** | Captive portal (hotspot), internal/external Radius server, Radius MAC authentication, SMS authorisation, SSO authentication, internal/external landing page, walled garden, user scripts, URL parameters, user groups, individual user or group limitations, user management, 9 default customisable themes and optionality to upload and download customised hotspot themes |
| **DHCP** | Static and dynamic IP allocation, DHCP relay, DHCP server configuration, status, static leases: MAC with wildcards |
| **QoS / Smart Queue Management (SQM)** | Traffic priority queuing by source/destination, service, protocol or port, WMM, 802.11e |
| **DDNS** | Supported >25 service providers, others can be configured manually |
| **DNS over HTTPS** | DNS over HTTPS proxy enables secure DNS resolution by routing DNS queries over HTTPS |
| **Network backup** | Mobile, VRRP, Wired options, each of which can be used as an automatic Failover |
| **SSHFS** | Possibility to mount remote file system via SSH protocol |
| **Traffic Management** | Real-time monitoring, wireless signal charts, traffic usage history |

Copyright © 2025, UAB TELTONIKA NETWORKS. Specifications and information given in this document are subject to change by UAB TELTONIKA NETWORKS without prior notice.

## Security

| | |
|---|---|
| **Authentication** | Pre-shared key, digital certificates, X.509 certificates, TACACS+, Internal & External RADIUS users authentication, IP & login attempts block, time-based login blocking, built-in random password generator |
| **Firewall** | Preconfigured firewall rules can be enabled via WebUI, unlimited firewall configuration via CLI, DMZ, NAT, NAT-T, NAT64 |
| **Attack prevention** | DDOS prevention (SYN flood protection, SSH attack prevention, HTTP/HTTPS attack prevention), port scan prevention (SYN-FIN, SYN-RST, X-mas, NULL flags, FIN scan attacks) |
| **VLAN** | Port and tag-based VLAN separation |
| **Mobile quota control** | Mobile data limit, customizable period, start time, warning limit, phone number |
| **WEB filter** | Blacklist for blocking out unwanted websites, Whitelist for specifying allowed sites only |
| **Access control** | Flexible access control of SSH, Web interface, CLI and Telnet |
| **SSL certificate generation** | Let's Encrypt and SCEP certificate generation methods |

Copyright © 2025, UAB TELTONIKA NETWORKS. Specifications and information given in this document are subject to change by UAB TELTONIKA NETWORKS without prior notice.

## VPN

| | |
|---|---|
| **OpenVPN** | Multiple clients and a server can run simultaneously, 27 encryption methods |
| **OpenVPN Encryption** | DES-CBC 64, RC2-CBC 128, DES-EDE-CBC 128, DES-EDE3-CBC 192, DESX-CBC 192, BF-CBC 128, RC2-40-CBC 40, CAST5-CBC 128, RC2-64-CBC 64, AES-128-CBC 128, AES-128-CFB 128, AES-128-CFB1 128, AES-128-CFB8 128, AES-128-OFB 128, AES-128-GCM 128, AES-192-CFB 192, AES-192-CFB1 192, AES-192-CFB8 192, AES-192-OFB 192, AES-192-CBC 192, AES-192-GCM 192, AES-256-GCM 256, AES-256-CFB 256, AES-256-CFB1 256, AES-256-CFB8 256, AES-256-OFB 256, AES-256-CBC 256 |
| **IPsec** | XFRM, IKEv1, IKEv2, with 14 encryption methods for IPsec (3DES, DES, AES128, AES192, AES256, AES128GCM8, AES192GCM8, AES256GCM8, AES128GCM12, AES192GCM12, AES256GCM12, AES128GCM16, AES192GCM16, AES256GCM16) |
| **GRE** | GRE tunnel, GRE tunnel over IPsec support |
| **PPTP, L2TP** | Client/Server instances can run simultaneously, L2TPv3, L2TP over IPsec support |
| **Stunnel** | Proxy designed to add TLS encryption functionality to existing clients and servers without any changes in the program's code |
| **DMVPN** | Method of building scalable IPsec VPNs, Phase 2 and Phase 3 and Dual Hub support |
| **SSTP** | SSTP client instance support |
| **ZeroTier** | ZeroTier VPN client support |
| **WireGuard** | WireGuard VPN client and server support |
| **Tinc** | Tinc offers encryption, authentication and compression in it's tunnels. Client and server support. |

## OPC UA

| | |
|---|---|
| **Supported modes** | Client, Server |
| **Supported connection types** | TCP |

## MODBUS

| | |
|---|---|
| **Supported modes** | Server, Client |
| **Supported connection types** | TCP |
| **Custom registers** | MODBUS TCP custom register block requests, which read/write to a file inside the router, and can be used to extend MODBUS TCP Client functionality |
| **Supported data formats** | 8-bit: INT, UINT; 16-bit: INT, UINT (MSB or LSB first); 32-bit: float, INT, UINT (ABCD (big-endian), DCBA (little-endian), CDAB, BADC), HEX, ASCII |

Copyright © 2025, UAB TELTONIKA NETWORKS. Specifications and information given in this document are subject to change by UAB TELTONIKA NETWORKS without prior notice.

## DATA TO SERVER

| | |
|---|---|
| **Protocol** | HTTP(S), MQTT, Azure MQTT |
| **Data to server** | Extract parameters from multiple sources and different protocols, and send them all to a single server; Custom LUA scripting, allowing scripts to utilize the router's Data to server feature |

## MQTT Gateway

| | |
|---|---|
| **Modbus MQTT Gateway** | Allows sending commands and receiving data from MODBUS Server through MQTT broker |

## DNP3

| | |
|---|---|
| **Supported modes** | Station, Outstation |
| **Supported connection** | TCP |

## DLMS/COSEM

| | |
|---|---|
| **DLMS Support** | DLMS - standard protocol for utility meter data exchange |
| **Supported modes** | Client |
| **Supported connection types** | TCP |
| **COSEM** | Allows to scan meter COSEM objects for automatic detection and configuration |

## API

| | |
|---|---|
| **Teltonika Networks Web API (beta) support** | Expand your device's possibilities by using a set of configurable API endpoints to retrieve or change data. For more information, please refer to this documentation: https://developers.teltonika-networks.com |

Copyright © 2025, UAB TELTONIKA NETWORKS. Specifications and information given in this document are subject to change by UAB TELTONIKA NETWORKS without prior notice.

## Monitoring & Management

| | |
|---|---|
| **WEB UI** | HTTP/HTTPS, status, configuration, FW update, CLI, troubleshoot, multiple event log servers, firmware update availability notifications, event log, system log, kernel log, Internet status |
| **FOTA** | Firmware update from server, automatic notification |
| **SSH** | SSH (v1, v2) |
| **SMS** | SMS status, SMS configuration |
| **Call** | Reboot, Status, Mobile data on/off, Output on/off, answer/hang-up with a timer |
| **TR-069** | OpenACS, EasyCwmp, ACSLite, tGem, LibreACS, GenieACS, FreeACS, LibCWMP, Friendly tech, AVSystem |
| **MQTT** | MQTT Broker, MQTT publisher |
| **SNMP** | SNMP (v1, v2, v3), SNMP Trap, Brute force protection |
| **JSON-RPC** | Management API over HTTP/HTTPS |
| **RMS** | Teltonika Remote Management System (RMS) |

## IoT Platforms

| | |
|---|---|
| **ThingWorx** | Allows monitoring of: WAN Type, WAN IP, Mobile Operator Name, Mobile Signal Strength, Mobile Network Type |
| **Cumulocity - Cloud of Things** | Allows monitoring of: Device Model, Revision and Serial Number, WAN Type and IP, Mobile Cell ID, ICCID, IMEI, Connection Type, Operator, Signal Strength. Has reboot and firmware upgrade actions |
| **Azure IoT Hub** | Can be configured with Data to Server to send all the available parameters to the cloud. Has Direct method support which allows to execute RutOS API calls on the IoT Hub. Also has Plug and Play integration with Device Provisioning Service that allows zero-touch device provisioning to IoT Hubs |
| **AWS IoT Core** | Utility to interact with the AWS cloud platform. Jobs Support: Call the device's API using AWS Jobs functionality |

## System Characteristics

| | |
|---|---|
| **CPU** | ARM Cortex-A7 1.2 GHz |
| **RAM** | 128 MB, DDR2 |
| **FLASH storage** | 512 MB, SPI Flash |

Copyright © 2025, UAB TELTONIKA NETWORKS. Specifications and information given in this document are subject to change by UAB TELTONIKA NETWORKS without prior notice.

## Firmware / Configuration

| | |
|---|---|
| **WEB UI** | Update FW from file, check FW on server, configuration profiles, configuration backup |
| **FOTA** | Update FW |
| **RMS** | Update FW/configuration for multiple devices at once |
| **Keep settings** | Update FW without losing current configuration |
| **Factory settings reset** | A full factory reset restores all system settings, including the IP address, PIN, and user data to the default manufacturer's configuration |

## FIRMWARE CUSTOMISATION

| | |
|---|---|
| **Operating system** | RutOS (OpenWrt based Linux OS) |
| **Supported languages** | Busybox shell, Lua, C, C++, and Python in Package manager |
| **Development tools** | SDK package with build environment provided |
| **GPL customization** | You can create your own custom, branded firmware and web page application by changing colours, logos, and other elements in our firmware to fit your or your clients' needs |
| **Package Manager** | The Package Manager is a service used to install additional software on the device |

## Input / Output

| | |
|---|---|
| **Input** | 1 x Digital Input, 0 - 6 V detected as logic low, 8 - 30 V detected as logic high |
| **Output** | 1 x Digital Output, Open collector output, max output 30 V, 300 mA |
| **Events** | Email, RMS, SMS |
| **I/O juggler** | Allows to set certain I/O conditions to initiate event |

## Power

| | |
|---|---|
| **Connector** | 4-pin industrial DC power socket |
| **Input voltage range** | 9 – 30 VDC, reverse polarity protection; surge protection >31 VDC 10us max |
| **PoE (passive)** | Possibility to power up through LAN1 port, not compatible with IEEE802.3af, 802.3at and 802.3bt standards, Mode B, 9 - 30 VDC |
| **Power consumption** | < 5 W |

Copyright © 2025, UAB TELTONIKA NETWORKS. Specifications and information given in this document are subject to change by UAB TELTONIKA NETWORKS without prior notice.

## Physical Interfaces

| | |
|---|---|
| **Ethernet** | 1 x RJ45 port, 10/100/1000 Mbps |
| **I/O's** | 1 x Digital Input, 1 x Digital Output on 4-pin power connector |
| **Status LEDs** | 3 x connection type status LEDs, 5 x connection strength LEDs, 2 x LAN status LEDs, 1x Power LED |
| **SIM** | 1 x SIM slot (Mini SIM – 2FF), 1.8 V/3 V |
| **Power** | 1 x 4-pin power connector |
| **Antennas** | 1 x SMA for LTE |
| **USB** | 1 x Virtual network interface via micro USB |
| **Reset** | Reboot/User default reset/Factory reset button |

## Physical Specification

| | |
|---|---|
| **Casing material** | Aluminium housing |
| **Dimensions (W x H x D)** | 74.5 x 25 x 64.4 mm |
| **Weight** | 134 g |
| **Mounting options** | DIN rail, wall mount, flat surface (all require additional kit) |

## Operating Environment

| | |
|---|---|
| **Operating temperature** | -40 °C to 75 °C |
| **Operating humidity** | 10% to 90% non-condensing |
| **Ingress Protection Rating** | IP30 |

## Regulatory & Type Approvals

| | |
|---|---|
| **Regulatory** | CE, UKCA, EAC, UCRF, Anatel, NOM, RCM, Giteki, CITC, Kenya, ICASA, Anatel, Arcotel, NBTC, NTC, IMDA, SIRIM, CB, WEEE, RoHS, REACH |
| **Operator** | Deutsche Telekom AG |
| **Vehicle** | ECE R10 (E-mark) |

Copyright © 2025, UAB TELTONIKA NETWORKS. Specifications and information given in this document are subject to change by UAB TELTONIKA NETWORKS without prior notice.

## EMC Emissions & Immunity

| | |
|---|---|
| **Standards** | EN 55032:2015 + A11:2020 + A1:2020<br>EN 55035:2017 + A11:2020<br>EN 61000-3-3:2013 + A1:2019 + A2:2021<br>EN IEC 61000-3-2:2019 + A1:2021<br>EN 301 489-1 V2.2.3<br>EN 301 489-52 V1.2.1 |
| **ESD** | EN 61000-4-2:2009 |
| **Radiated Immunity** | EN IEC 61000-4-3:2020 |
| **EFT** | EN 61000-4-4:2012 |
| **Surge Immunity (AC Mains Power Port)** | EN 61000-4-4:2014 + A1:2017 |
| **CS** | EN 61000-4-6:2014 |
| **DIP** | EN IEC 61000-4-11:2020 |

## RF

| | |
|---|---|
| **Standards** | EN 301 511 V12.5.1<br>EN 301 908-1 V15.2.1<br>EN 301 908-2 V13.1.1<br>EN 301 908-13 V13.2.1 |

## Safety

| | |
|---|---|
| **Standards** | **CE:** EN IEC 62368-1:2020+A11:2020, EN IEC 62232:2020<br>**RCM:** AS/NZS 62368.1:2018<br>**CB:** IEC 62368-1:2018 |

Copyright © 2025, UAB TELTONIKA NETWORKS. Specifications and information given in this document are subject to change by UAB TELTONIKA NETWORKS without prior notice.

## ORDERING

### STANDARD PACKAGE*

**TRB140**

**9W PSU**

**1 X MOBILE MAGNETIC ANTENNA**

**MICRO-USB CABLE (0.8M)**

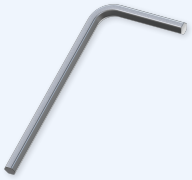

**1 X HEX KEY**

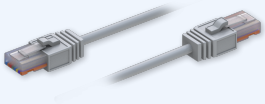

**ETHERNET CABLE (1.5M)**

**QSG (QUICK START GUIDE)**

- TRB140
- 9 W PSU
- 1x Mobile antenna (magnetic mount, SMA male, 3 m cable)
- Micro-USB cable (0.8 m)
- 1x hex key
- LAN cable
- QSG (Quick Start Guide)
- Packaging box

*Standard package contents may differ based on standard order codes.

For more information on all available packaging options – please contact us directly.

Copyright © 2025, UAB TELTONIKA NETWORKS. Specifications and information given in this document are subject to change by UAB TELTONIKA NETWORKS without prior notice.

### CLASSIFICATION CODES

**HS Code:** 851762

**HTS:** 8517.62.00

### AVAILABLE VERSIONS

| | | |
|---|---|---|
| TRB140 **0*****<br>Europe[1], The Middle East[1], Africa, Korea, Thailand, India, Malaysia, Singapore | **4G (LTE-FDD)**: B1, B3, B7, B8, B20, B28A<br>**4G (LTE-TDD)**: B38, B40, B41<br>**3G**: B1, B8<br>**2G**: B3, B8 | TRB140003000 / Standard package with EU PSU<br>TRB140005000 / Standard package with UK PSU<br>TRB14000A900 / Standard package with Universal PSU<br>TRB14000B200 / Mass packing code |
| TRB140 **1*****<br>South America, Australia, New Zealand, Taiwan, Malaysia | **4G (LTE-FDD)**: B1, B2[2], B3, B4, B5, B7, B8, B28<br>**4G (LTE-TDD)**: B40<br>**3G**: B1, B2, B5, B8<br>**2G**: B2, B3, B5, B8 | TRB140107000 / Standard package with AU PSU<br>TRB140106000 / Standard package with US PSU<br>TRB140103000 / Standard package with EU PSU<br>TRB14010A900 / Standard package with Universal PSU<br>TRB14010C100 / Standard package with Power cable with 4-way screw terminal<br>TRB14010B200 / Mass packing code |
| TRB140 **4*****<br>Japan | **4G (LTE-FDD)**: B1, B3, B8, B18, B19, B26<br>**4G (LTE-TDD)**: B41<br>**3G**: B1, B6, B8, B19 | TRB14040C400 / Standard package with JP PSU<br>TRB14040B200 / Mass packing code |

The price and lead-times for region (operator) specific versions may vary. For more information please contact us.

1 - Regional availability - excluding Russia, Belarus & Iran
2 - LTE-FDD B2 does not support Rx-diversity

## TRB140 SPATIAL MEASUREMENTS

Copyright © 2025, UAB TELTONIKA NETWORKS. Specifications and information given in this document are subject to change by UAB TELTONIKA NETWORKS without prior notice.

## TOP VIEW

The figure below depicts the measurements of device and its components as seen from the top:

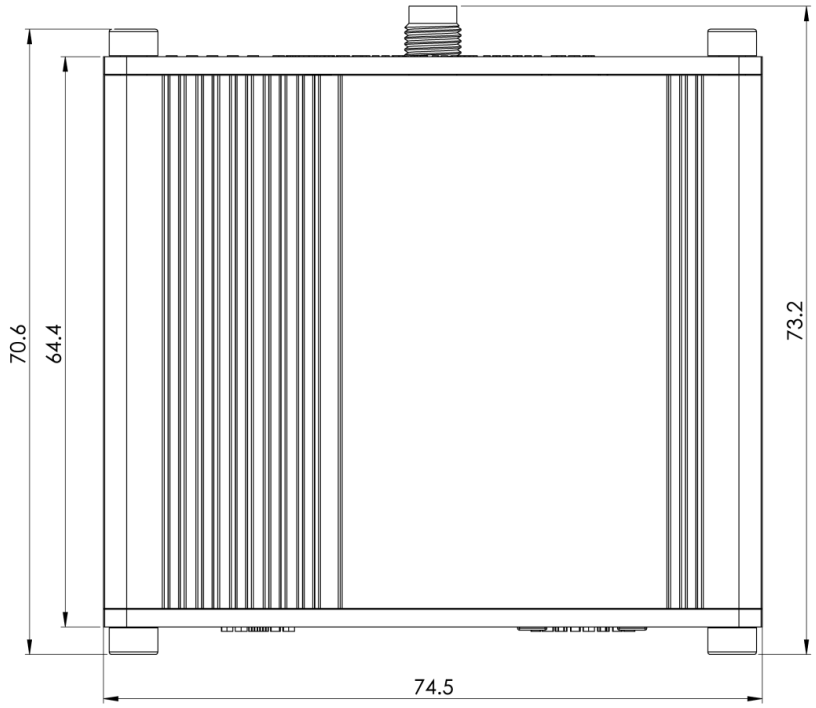


## RIGHT VIEW

The figure below depicts the measurements of device and its components as seen from the right:

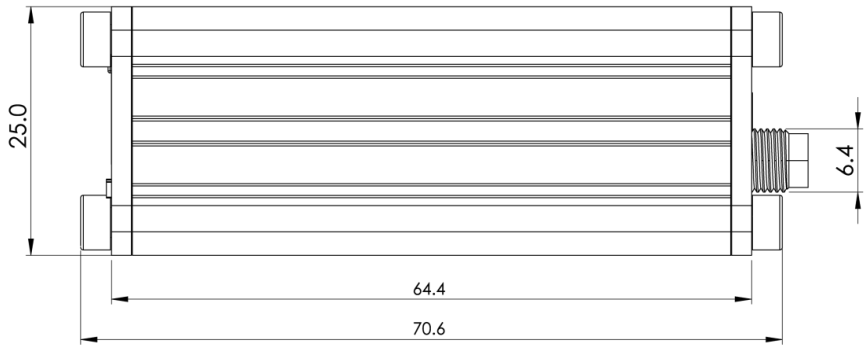


Copyright © 2025, UAB TELTONIKA NETWORKS. Specifications and information given in this document are subject to change by UAB TELTONIKA NETWORKS without prior notice.

## REAR VIEW

The figure below depicts the measurements of device and its components as seen from the back panel side:

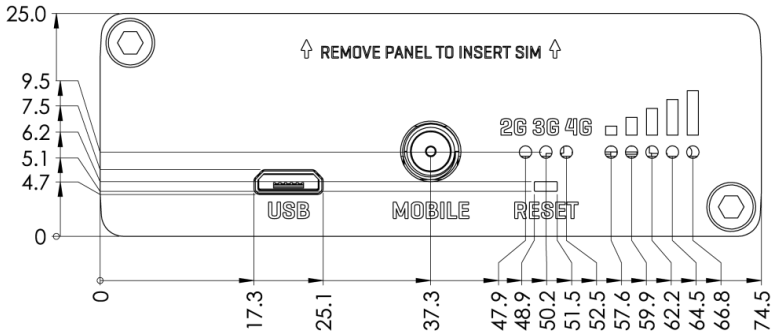


## FRONT VIEW

The figure below depicts the measurements of device and its components as seen from the front panel side:

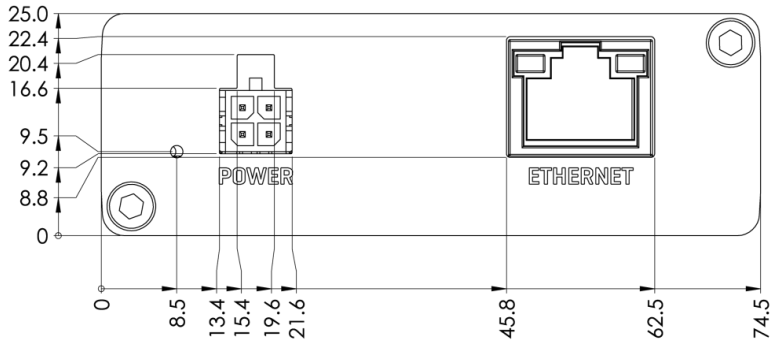


Copyright © 2025, UAB TELTONIKA NETWORKS. Specifications and information given in this document are subject to change by UAB TELTONIKA NETWORKS without prior notice.

## MOUNTING SPACE REQUIREMENTS

The figure below depicts an approximation of the device's dimensions when cables and antennas are attached:

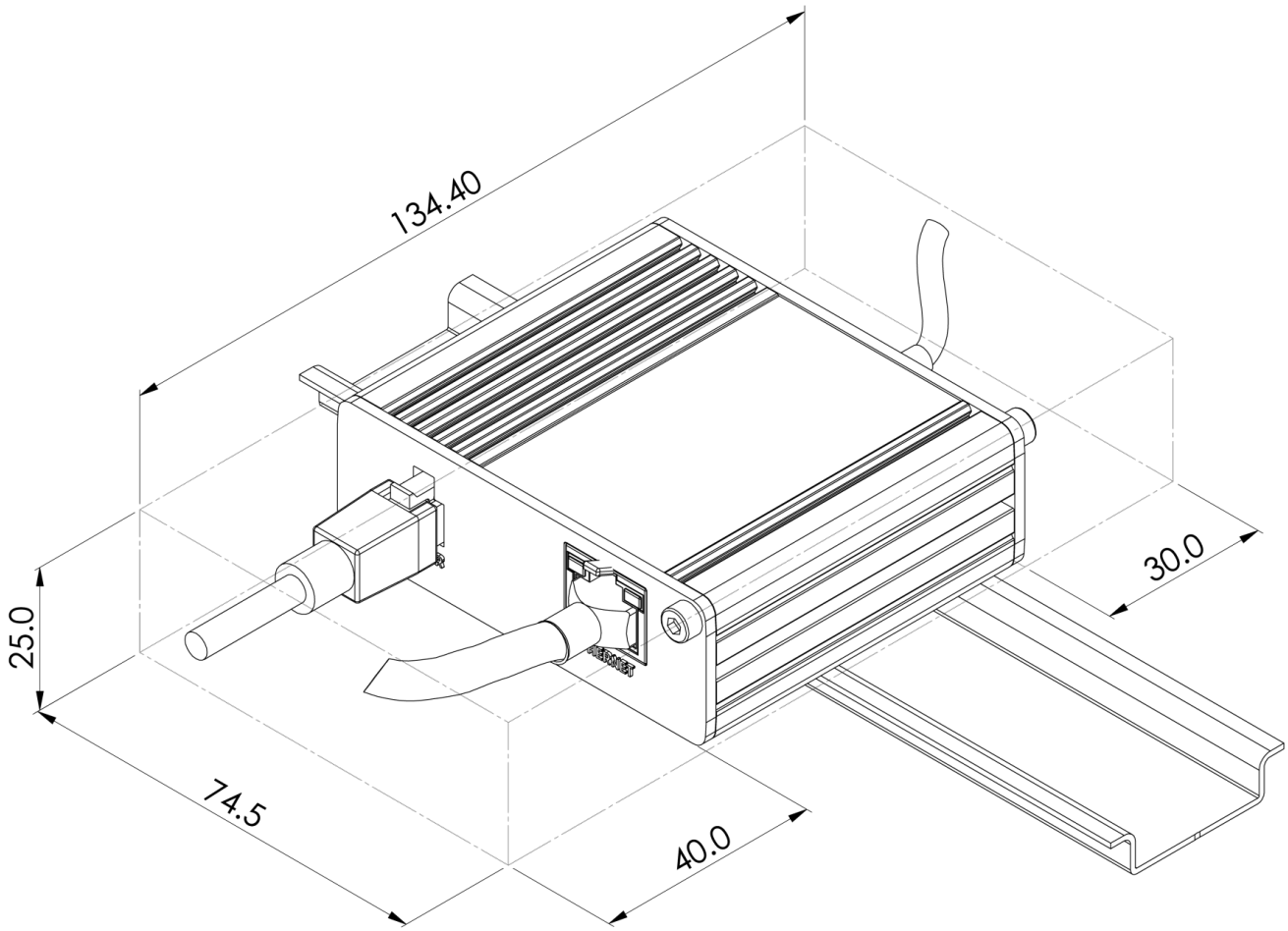


Copyright © 2025, UAB TELTONIKA NETWORKS. Specifications and information given in this document are subject to change by UAB TELTONIKA NETWORKS without prior notice.