FILM CAPACITORS

2026/2027

ISO/TS 16949 CERTIFIED

ENGINEERED SOLUTIONS

JIANGHAI EUROPE
Electronic Components GmbH

© 2026/2027 Jianghai Europe Electronic Components GmbH

Capacitors from Jianghai

JIANGHAI EUROPE ELECTRONIC COMPONENTS GMBH IS THE EUROPEAN SALES ORGANIZATION OF NANTONG JIANGHAI CAPACITOR CO., LTD., NANTONG (CHINA). SINCE 2003, SALES, MARKETING, TECHNICAL SUPPORT, CUSTOMER SERVICE TEAM AND WAREHOUSE OF JIANGHAI EUROPE ELECTRONIC COMPONENTS GMBH ARE LOCATED IN KREFELD AND KEMPEN (GERMANY).

» ELECTROLYTIC CAPACITORS

Jianghai has grown since its foundation in 1958 to become the largest Chinese manufacturer of aluminum capa-citors generating revenues of 1,35 billion USD in 2025. While Jianghai started in the beginning with the production of specialty chemicals (e.g., electrolyte solutions), it entered the production of aluminum electrolytic capacitors already in 1970.

» INTEGRATION OF PREMATERIAL

More recently, Jianghai extended its production range by integrating high and low voltage anode foil etching and forming facilities. All factories are located in mainland China and Japan: the most important ones are in Nantong (north to Shanghai), in Inner Mongolia, and in Xi'An area. Jianghai is well prepared for further expansion due to its successful entrance to the stock market in summer 2010.

» FILM CAPACITORS

In 2012, the product portfolio was com-plemented by a range of power film capacitors. For this new business unit, Jianghai also follows the strategy of vertical integration and thus the production comprises the metallization and slitting of the plastic film as well as the assembly of the finished goods. Highly automated production facilities ensure the efficient mass production of film capacitor modules. Driven by the thriving electric vehicle market in China, Jianghai has attained a leading position for the supply of these customer specific components.

» POLYMER CAPACITORS

The year 2013 was marked by a major breakthrough in R&D for polymer aluminum electrolytic capacitors: the dielectric strength of these products with an extremely low ESR value enables their use in a wide range of applications, e.g. in white goods, industrial automation, telecommunications infrastructure, power supplies and LED ballasts. Hybrid and Stacked (Chip) Polymer Capacitors were added into the product portfolio in the year 2019.

» ENERGY CAPACITORS

For energy storage applications, Jianghai has developed a range of Lithium Ion-Capacitors (Li-C) based on the well-known EDLC technology. Li-C combine the advantage of many hundred thousand charge and discharge cycles and high energy density, allowing for a wide range of applications in energy storage and recuperation. Jianghai offers EDLC as well as Li-C in various form factors, e.g. in radial, snap-in, pouch or module shape.

» CAPACITOR COMPETENCE CENTER

Global presence of experienced sales and technical marketing experts at offices in Europe, Asia and the Americas ensure the local support of our customers based on sound know-how in all project phases. In 2014 Jianghai Europe has established an additional service for its customers in Europe: Experts for capacitors are awaiting telephone calls or emails at the CCCenter as a kind of hotline for all kind of technical requests.

» CUSTOMIZED PRODUCTS

Jianghai's particular strength as a volume manufacturer is to offer customized products. Jianghai focuses on the demanding professional industrial segment with many power electronics applications. Research and development in collaboration with several specialized university institutes as well as the access to all vital pre-materials enable Jianghai to create engineered, customized solutions to fit smoothly into a specific application. Jianghai is continuously improving processes, thereby enhancing the quality of its products and services. The list of certificates awarded to Jianghai reflects its level of achievement. In the year 2013, the Jianghai Europe sales office has become certified according to ISO9001 and ISO14001.

» CONTACT

Jianghai Europe Electronic Components GmbH
Uerdinger Str. 95 · 47799 Krefeld, Germany
T: +49 (21 51) 65 20 88-0 | F: +49 (21 51) 65 20 88-88
info@jianghai-europe.com | www.jianghai-europe.com

GENERAL INFORMATION

About us	3
Overview DC-LINK, Snubber and Modules	5
Handling Precautions Film Capacitors	6

DC-LINK CAPACITORS

SERIES	CODE	INFO	TEMPERATURE	TERMINAL	PAGE
CBB 131	DL	UPDATED	85°C	CYLINDRIC SCREW TERMINAL	10
CBB 132	DH		105°C	CYLINDRIC SOLDERING PIN	20
CBB 136	DP	UPDATED	105°C	PLASTIC CASE MOUNTING	23
CBB 138	DS	UPDATED	105°C	SQUARE SOLDERING PIN	26

SNUBBER CAPACITORS

SERIES	CODE	INFO	TEMPERATURE	TERMINAL	PAGE
CBB 161	IL		105°C	FLANGE CONTACT	34
CBB 162	IP		105°C	SOLDERING PIN	39
CBB 164	IA	NEW	105°C	SOLDERING PIN	44
CBB 165	IS		105°C	FLANGE CONTACT	48
CBB 166	IG		105°C	SOLDERING PIN	52

MODULES

SERIES	CODE	INFO	TEMPERATURE	TERMINAL	PAGE
CBB 133	DM		85°C	METAL HOUSING	56
CBB 135	DV		105°C	PLASTIC HOUSING	59

DC-LINK

APPLICATIONS:

1. High power frequency converters
2. Motion control, welding equipment, elevators
3. Electric and hybrid electric vehicles
4. Photovoltaic and wind inverters
5. Industry high-end power supplies

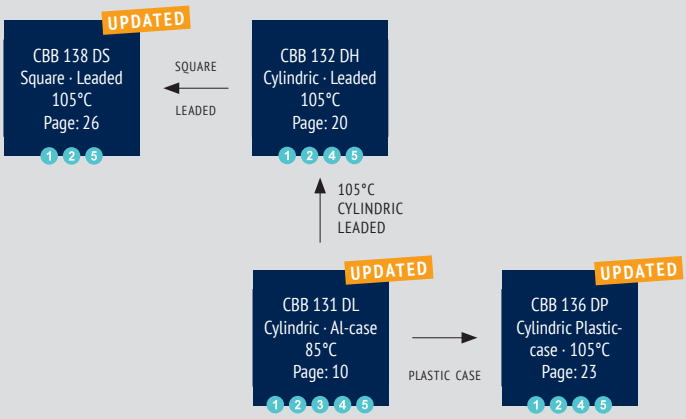

SNUBBER

APPLICATIONS:

1. High pulse and high frequency circuits
2. IGBT mounting

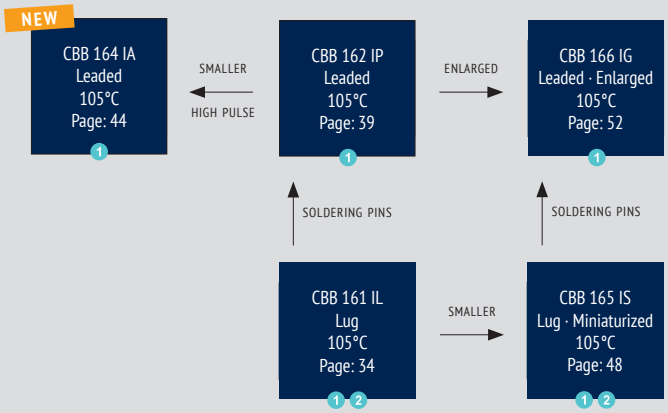

MODULES

APPLICATIONS:

1. High power frequency converters
2. Electric and hybrid electric vehicles
3. Electric and hybrid electric vehicles, traction and trains

WARRANTY The information contained in this datasheet does neither form part of any quotation nor of a contract, it is believed to be accurate, reliable and up to date. Quality data are based on the statistical evaluations of a large quantity of parts and do not constitute a guarantee in a legal sense. However, agreement on these specifications does mean that the customer may claim for replacement of individual defective capacitors within the terms of delivery. We cannot assume any liability beyond the replacement of defective components. This applies in particular to any further consequences of component failure. Furthermore it must be taken into consideration that the figures stated for lifetime and failure rates refer to the average production status and are therefore to be understood as mean values (statistical expectations) for a large number of delivery lots of identical capacitors. These figures are based on application experience and data obtained from preceding tests under normal conditions, or – for purpose of accelerated aging – more severe conditions. JIANGHAI reserves the right to change these specifications without prior notice. Any application information given is advisory and does not form part of any specification. The products are not primarily designed for use in life supporting applications, devices or systems where malfunction of these products can reasonably be expected to result in personal injury. JIANGHAI customers using or selling these products for use in such applications without prior written consent of JIANGHAI do so at their own risk and agree fully to indemnify JIANGHAI for any damage resulting from such improper use or sale. This version of the datasheet supersedes all previous versions.

NOMINAL CAPACITANCE C_R Nominal Capacitance is defined at 20°C and 50Hz (120Hz).

RATED VOLTAGE U_R

DC and Snubber Capacitors:

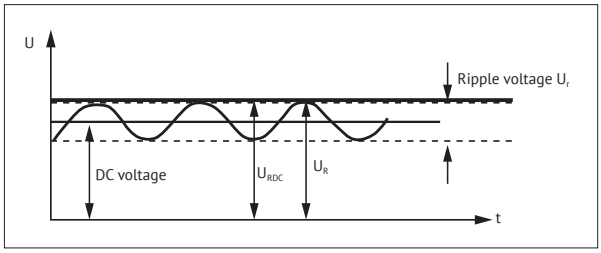

U_{RDC} Maximum operating peak voltage of either polarity but of a non-reversing type waveform, for which the capacitor has been designed, for continuous operation. The maximum DC voltage is the sum of the DC voltage and peak AC voltage. The peak voltage shall not exceed the rated voltage U_{RDC}.In case any AC Voltage U_{RAC} is specified, it is defined as max peak voltage of a repetitive AC voltage.

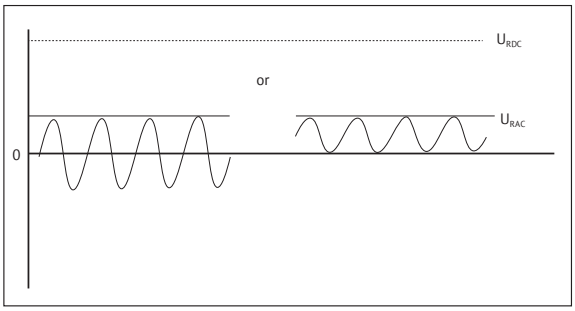

AC Capacitors:

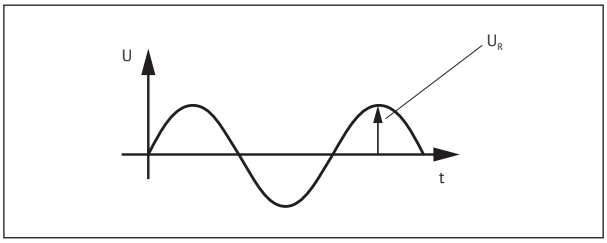

U_{RAC} Maximum operating peak recurrent voltage of either polarity of a reversing type waveform for which the capacitor has been designed.

PEAK-TO-PEAK RIPPLE VOLTAGE U_r (DC Capacitor, Snubber Capacitors) shall not exceed $U_r \leqslant 0{,}3 * U_{RDC}$.

OPERATING VOLTAGE The plastic film capacitor varies in the maximum applicable voltage depending on the applied voltage waveform, current waveform, frequency, ambient temperature (capacitor surface temperature), capacitance value, etc. Be sure to use capacitors within the specified values by checking the voltage waveform, current waveform, and frequency applied to them (In the application of high frequency, the permissible voltage varies with the type of the capacitor. Refer to the specification for details. See also Voltage Derating tables.).

NON-RECURRENT SURGE VOLTAGE U_S Peak voltage induced by a switching or any other disturbance of the system which is allowed for a limited number of times and for durations shorter than the basic period.

- Maximum duration: 50 ms / pulse
- Maximum number of occurrences: 1000 (during load)

MAXIMUM RATE OF VOLTAGE RISE dV/dt Maximum permissible repetitive rate of voltage rise of the operational voltage.

OPERATING CURRENT Due to the fact that the dissipation factor of the capacitor is greater than zero, heat will be generated in any application where alternating currents or pulses occur. The resulting internal temperature rise may cause a severe deterioration of the capacitor's withstanding voltage, or may lead to a breakdown (even smoke or fire may result). Therefore, the safe use of capacitor must be within the rated voltage (or category voltage) and the permissible current ranges. The rated current must be considered by dividing into pulse current (peak current) and continuous current (rms current) depending on the break down mode, and when using, should make sure the both currents are within the permissible range.

MAXIMUM CURRENT I_{MAX} Maximum Rms Current for continuous operation, see Current Derating tables.

MAXIMUM PEAK CURRENT $\hat{I}$ Maximum permissible repetitive peak current which can occur during continuous operation.

$\hat{I} = C_R * (dV/dt)$

MAXIMUM SURGE CURRENT $\hat{I}_S$

- Maximum duration: 50 ms / pulse
- Maximum number of occurrences: 1000 (during load)

SERIES RESISTANCE R_S Effective ohmic resistance of the conducting elements of the capacitor.

EQUIVALENT SERIES RESISTANCE ESR The ESR represents all ohmic resistances: $ESR = \tan\delta/(\omega C) = R_s + \tan\delta_o/(\omega C)$

DIELECTRIC DISSIPATION FACTOR $\tan\delta_0$ Constant dissipation factor of the dielectric material.

LOSS FACTOR $\tan\delta$ The dissipation factor is the ratio between the reactive and effective power.

HOTSPOT TEMPERATURE $\Theta_{HOTSPOT}$ Temperature at the hottest position inside the capacitor. $\Theta_{hotspot} = \Theta_{ambient} + P_{loss} * R_{th}$

R_{th}: thermal resistance, P_{loss}: Powerloss $P_{loss} = ESR * I_{rms}^2$,

$\Theta_{ambient}$ = ambient temperature. The temperature increase due to the powerlosses P_{loss} shall not exceed 15K, if not specified otherwise.

CHARGING AND DISCHARGING Because the charging and discharging current of capacitor is obtained by the product of voltage rise rate (dV/dt) and capacitance, low voltage charging and discharging may also cause deterioration of capacitor such as shorting and open due to sudden charging and discharging current. When charging and discharging, pass through a resistance of 20Ω/V to 1000Ω/V or more to limit the current. When connecting multiple film capacitors in parallel in withstand voltage test or life test, connect a resistance of 20Ω/V to1000Ω/V or more in series to each capacitor. In addition, **capacitors must be discharged via a resistor before handling**. Because the capacitors do not have any discharge resistors built-in, there is a risk of residual voltages and electric energy contents that might be dangerous.

ALTITUDE/m	CURRENT DERATING COEFFICIENT
⩽ 2 000	1,00
2 500	0,95
3 000	0,90
3 500	0,85
4 000	0,80
4 500	0,75
5 000	0,70

TEMPERATURE RANGE AND ALTITUDE Use film capacitors only within the specified operating temperature range. The altitude and barometic pressure have an impact on the functionality of the capacitor. Max. Altitude: 2000m above sea level.

EXPECTED LIFETIME The expected lifetime of the capacitor depends on the applied voltage and the hot spot temperature during operation. For capacitors applied in different situations, the obtainable average service lives are different. Please refer to the life time diagrams of each series.

FAILURE RATE λ (FAILURE IN TIME FIT) 1 FIT = $1/10^{-9}$h (1 failure per 10^9 components test hours), $\lambda = r/(nt)$

r= number of failure, n= test number, t= test time

INSULATION VOLTAGE U_i Rms value of AC voltage designed for the insulation between terminals of the capacitor to case or earth. The insulation voltage is equal to the rated voltage of the capacitor, divided by , unless otherwise specified.

INSULATION RESISTANCE R_i Ration between applied DC Voltage and resulting leakage current after 1 minute of charge. It is defined in MΩ. Typically it is given as time constant R_i*C [μF] in seconds.

VOLTAGE BETWEEN TERMINALS U_{TT} Voltage between terminals.

VOLTAGE BETWEEN TERMINALS AND CASE U_{TC} Voltage between terminals and case.

BUZZING NOISE Any buzzing noise produced by a capacitor is caused by the vibration of the film due to the Coulomb force that is generated between the electrodes with opposite poles. It is of no harm to the capacitor.

DIELECTRICAL ABSORPTION Due to the dielectrical absorption voltages may occure between the terminals. Please discharge the capacitor before usage.

SURFACE OVER TEMPERATURE $\Delta\theta_{case}$ When current continuously flow through the capacitor, the temperature inside the capacitor will rise induced by dissipated heat. If the temperature exceeds the maximum allowed hot-spot temperature, it might cause a short circuit or fire. The limits described in the catalogue must not be exceeded and it's necessary to check the temperature on the capacitor's surface in operation.

FLAME RETARDATION Although flame retarding PU resin or plastic case material is used in the coating or encapsulation of plastic film capacitors, continuous exposure to high temperature ambient or fire will break the coating layer or plastic case of the capacitor, and may lead to melting and ignition of the capacitor element.

HUMID AMBIENT If used for a long time in a humid ambient, the capacitor might absorb humidity and oxidize the electrodes causing damage to the capacitor. In case of AC application, high humidity would increase the corona effect. This phenomenon causes a drop in capacitance and an increase of capacitor losses. Humidity needs to be avoided. If needed please inform Jianghai separately for technical adopted components.

STORAGE CONDITIONS 1) Capacitors must not be stored in corrosive atmospheres, particularly not when chlorides, sulfides, alkali, acids, lye, salts, organic solvents or similar substances are present. 2) It must not be stored in high temperature and/or high humidity environments. The following storage conditions must be kept (applicable only for storage in the original package): Temperature: ⩽ 35 °C; Humidity: ⩽ 80% RH, no dew allowed on the capacitor; Storage time: ⩽ 24 months

MOUNTING Other devices, which are mounted near the capacitor, should not touch the capacitor. Additional heat coming from other components near the capacitor may reduce the lifetime of the capacitor. Do never attempt to bend or twist the capacitor after mounting and avoid any mechanical stress on the terminals. Never exceed the max. permissible torques when tightening the terminal screws or the mounting bolt's cap nuts.

CAUTION & WARNINGS Do not touch the terminals of capacitors. The energy stored in capacitors may be lethal. Ensure that the operating environment of the equipment into which the capacitor has been built, is within the specified conditions. Capacitors must not be used in corrosive atmospheres, particularly not when chlorides, sulfides, alkali, acid, lye, salts, organic solvents or similar substances are present. Electrical or mechanical misapplication may be hazardous. Personal injury or property damage may result from bursting of the capacitors or from expulsion of melted material.

Jianghai Europe E.C. GmbH, v7 0726

GOOD TO KNOW:

Not in the mood for paper?

In that case, feel free to use the product search on our website!

https://jianghai-europe.com/productsearch

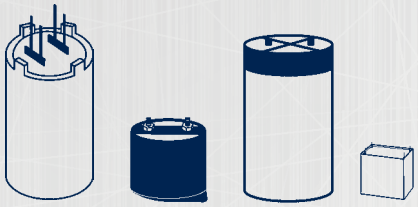

DC LINK CAPACITORS

SERIES	CODE	INFO	TEMPERATURE	TERMINAL	PAGE
CBB 131	DL	UPDATED	85°C	CYLINDRIC SCREW TERMINAL	**10**
CBB 132	DH		105°C	CYLINDRIC SOLDERING PIN	**20**
CBB 136	DP	UPDATED	105°C	PLASTIC CASE MOUNTING	**23**
CBB 138	DS	UPDATED	105°C	SQUARE SOLDERING PIN	**26**

DC LINK

FEATURES

- **DC-Link**
- Very low dissipation factor
- High ripple current capability
- Self-healing
- Long lifetime
- Aluminum case

OVERVIEW

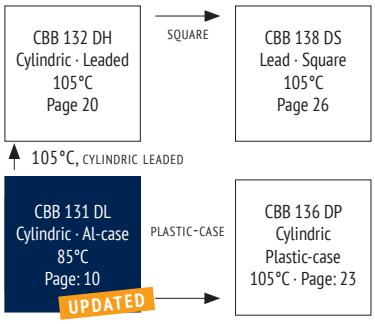

PRODUCT

APPLICATIONS

- High power frequency converters
- Motion control, welding equipment, elevators
- Electric and hybrid electric vehicles
- Photovoltaic and wind inverters

CHARACTERISTICS

ITEM	CHARACTERISTICS
Climatic Category	40/85/56 (IEC 61071)
Operating Temperature	–40 ~ +85°C (θhotspot ≤ 85°C)
Storage Temperature	–40 ~ +85°C
Rated Voltage U_{RDC}	600 ~ 3 600V_{DC}
Capacitance Range	44 ~ 4 300µF
Capacitance Tolerance	±10% (K), ±5% (J)
Voltage between Terminals U_{TT}	1,5 * U_{RDC} (20°C, 10s)
Voltage between Terminals & Case U_{TC}	≥ 3 000V_{AC} (20°C, 50Hz, 10s)
Max. Overvoltage	Please see IEC 61071
Insulation Resistance Ri*C	≥ 10 000 MΩ * µF (20°C, 100 V_{DC}, 1 min)
Dielectric Dissipation Factor tan δ_0	≤ 2 * 10^{-4} (20°C, 100 Hz)
Life Time Expectancy	≥ 100 000h (θhotspot ≤ 70°C, U_{RDC}), failure rate ≤ 50 FIT or 100 FIT (see table)
Reference Standard	IEC 61071:2007

ENVIRONMENTAL

The products are RoHS, WEEE and REACh compliant.

The detailed version please see seperate "Environmental Certificates" document or www.jianghai-europe.com

APPROVALS

UL94-V0:

Plastic & Compound Mass

UL810:

CZDS2.E227010 (Construction)

(except Can Style C & P)

LIFETIME

END OF LIFE: 3% REDUCTION OF CAPACITANCE

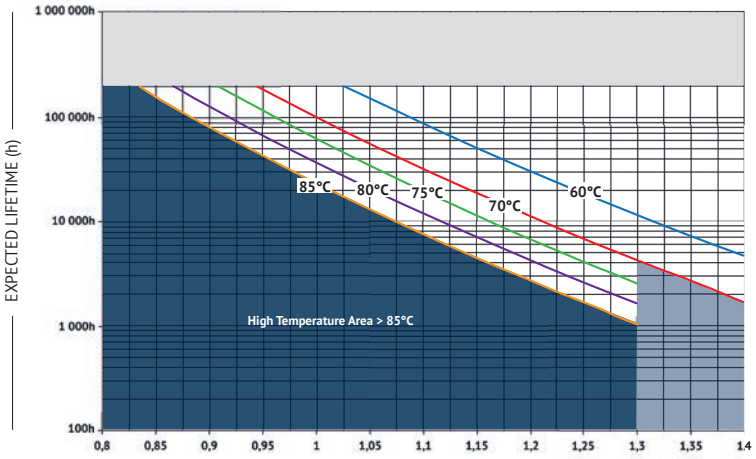

CURRENT DERATING

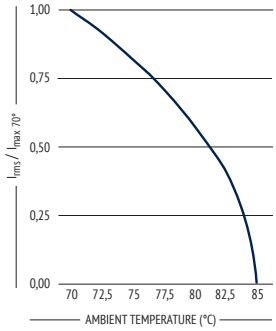

CAN STYLES (OTHERS ON REQUEST)

CAN STYLE B

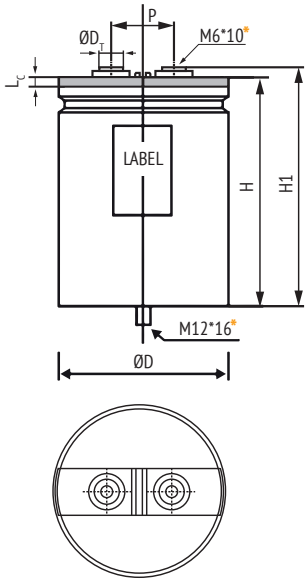

H1=H+5mm

Aluminum Case
with Flanging
Anti-Creep Insulation

D_T = 12mm

M6*10 screw female

CAN STYLE C

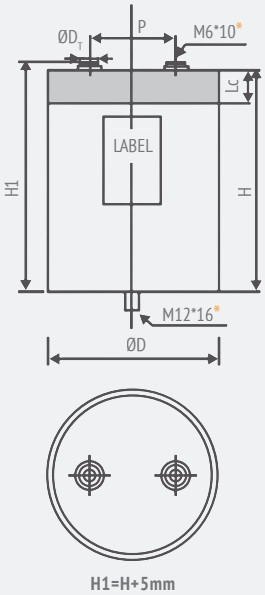

H1=H+5mm

Aluminum/Plastic Case

D_T = 16mm

M6*10 screw female

no UL 810!

not preferred

CAN STYLE D

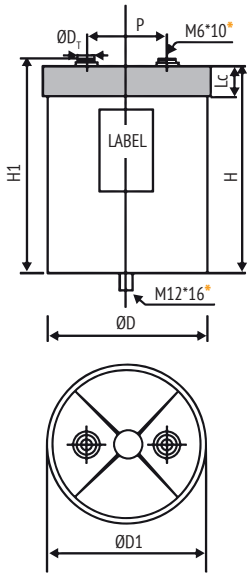

H1=H+5mm

Aluminum/Plastic Case
Enlarged Anti-Creep Insulation

D_T = 12mm

M6*10 screw female

CAN STYLE G

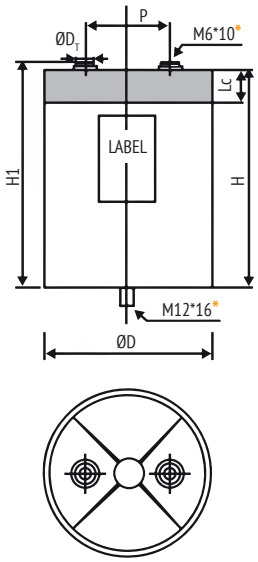

H1=H+5mm

Aluminum/Plastic Case
Anti-Creep Insulation

Can Style **G** D_T = 16mm

Can Style **G** M8*10 screw female
M10*10 screw female

CAN STYLE H/I

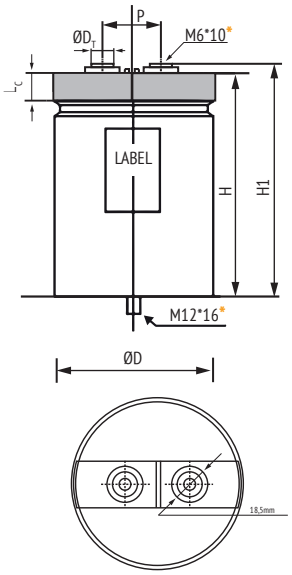

H1=H+5mm

Aluminum/Plastic Case
with Flanging
Anti-Creep Insulation

Can Style **H/I**: D_T = 14mm

M6*10 screw female

CAN STYLE P

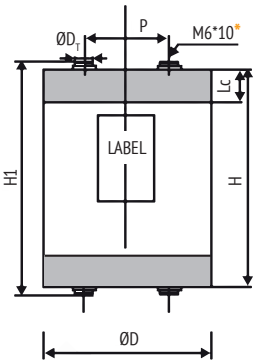

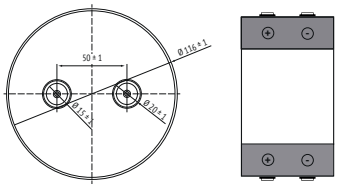

H1=H+5mm

Aluminum/Plastic Case
Double Pole
Anti-Creep Insulation

DT = 16mm

M6*10 screw female

in mm

DC LINK

DIMENSIONS

Diameter D ± 1,0mm	Diameter Cab D_1 ± 1,0mm	Can Style	Pitch P ± 0,5mm	Length Cab L_C ± 1,0mm	Diameter Terminal D_T ± 0,5mm
76	-	B	32	32	12
86	-	B	32	32	12
86	-	C	32	20	16
89	92	D	45	35	12
96	-	B	32	32	12
116	-	H	50	10	14
116	-	I	50	45	14
136	-	G	50	35	16

Max. Torque for terminals: 3Nm (M5), 5Nm (M6), 6Nm (M8), 8Nm (M10)
Max. Torque for stud mounting screws: 12Nm (M12), 15Nm (M16)

INTERNAL CONSTRUCTION

(Example: Can Style C, double inner construction)

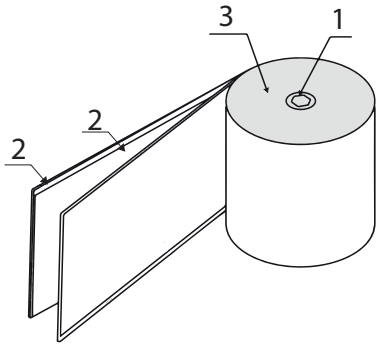

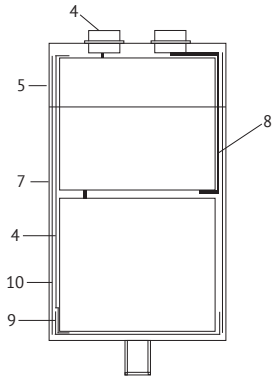

NO.	ITEM	MATERIAL
1	Winding Core	PC
2	Metallized Film	PP + Al, Zn
3	Metal Sprayed Electrode	Zn + Sn/Zn
4	Terminals	Cu, Sn-plated
5	Deck	PC

NO.	ITEM	MATERIAL
6	Aluminum Case	Al
7	Potting Compound	PU resin (+Epoxy)
8	Connection Electrode	Cu
9	Insulation Cover	PPO
10	Winding Insulation	Paper + PP

MARKING

Jianghai	BRAND
CBB 131	SERIES DESIGNATION
540µF ±10%	CAPACITANCE AND TOLERANCE
U_R = 600V_{DC}	U_R RATED VOLTAGE
U_{TC} = 3000V 50/60 HZ	U_{TC} VOLTAGE BETWEEN TERMINALS AND CASE, FREQUENCY
-40~+85°C IEC61071	TEMPERATURE RANGE, REFERENCE STANDARD
Discharge before handling	SAFETY WARNING
E37F26104	DATE CODE

ACCESSOIRES FOR BRACKET MOUNTING (ORDER CODE „Y“)

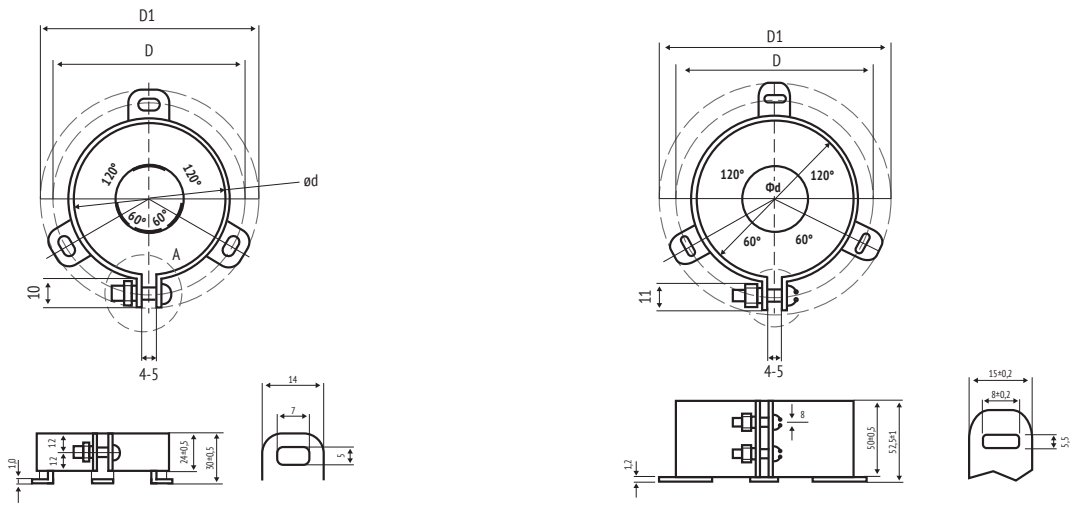

in mm

DC LINK

DC LINK

ORDER CODE

FC	C	A3	DL	427	K	K	136	0	3	1	A	1	E 3
Capacitor type	Product shape	DC rated voltage code (V)	Series code	Capacitance Code Examples (µF)	Capacitance tolerance	Diameter (mm)	Height (mm)	Terminal style	Terminal pitch (mm)	Stud bolt mounting	Can style	Inner Construction	For internal use
Film Cap. = FC	cylindrical = C	600 **2S**	CBB131 **DL**	100 **107**	±5% **J**	76 **H**	95 **095**	Female M5*7 **8**	32 **3**	flat, with Y bracket **Y**	Style B **B**	**1**	
		700 **2Q**		220 **227**	±10% **K**	85 **K**	120 **120**	Female M6*10 **0**	45 **4**	flat, without bracket **0**	Style C **C**	**2**	
		800 **2K**		420 **427**	±20% **M**	86 **L**	136 **136**	Female M8*10 **2**	50 **5**	bolt M12x16 **1**	Style D **D**	**3**	
		900 **R2**		500 **507**		89 **M**	155 **155**	Female M8*12 **6**		bolt M16x25 **2**	Style E **E**		
		1000 **3A**		1000 **108**		96 **W**	175 **175**	Female M10*10 **4**		bolt M12x12 **3**	Style F **F**		
		1100 **A3**		1100 **118**		116 **P**	225 **225**	Female M10*12 **B**			Style G **G**		
		1200 **3B**				136 **T**	230 **230**	Male M6*20 **1**			Style H **H**		
		1300 **O3**						Male M8*12 **9**			Style I **I**		
		1500 **C3**						Male M8*15 **A**			Style L **L**		
		1700 **F3**						Male M8*17 **7**			Style N **N**		
		2000 **3D**						Male M8*20 **3**			Style P **P**		
		2200 **D2**						Male M10*20 **5**					
		2600 **3E**											
		2800 **L3**											
		3000 **3F**											
		3200 **3U**											
		3600 **3V**											

RATINGS

U_R ≤85°C (V_{DC})	C_R (µF)	I_{max} 70°C, 1kHz (A)	I_{max} 60°C, 1kHz (A)	I_{max} 50°C, 1kHz (A)	I_{max} ≤40°C, 1kHz (A)	Î (1) (A)	ESR_{typ} 20°C, 1kHz (mΩ)	R_{th} (2) (K/W)	L_S 20°C (nH)	D ±1,0 (mm)	H ±1,0 (mm)	ORDER CODE "#" to be defined, see ordering code table
600 2S	480	35	50	61	70	4 800	1,6	5,1	≤50	76	95	FCC2SDL487#H095#3##1E3
	650	33	47	58	67	5 200	1,9	4,7	≤60	76	120	FCC2SDL657#H120#3##1E3
		40,3	57	70	81	5 200	1,1	5,6	≤50	86	95	FCC2SDL657#L095#3##1E3
	880	40	57	69	80	6 248	1,3	4,8	≤60	86	120	FCC2SDL887#L120#3##1E3
	950	41	58	71	82	6 650	1,4	4,2	≤60	76	175	FCC2SDL957#H175#3##2E3
	1 100	40	57	70	81	6 600	1,4	4,4	≤50	86	155	FCC2SDL118#L155#3##2E3
	1 200	48	68	83	96	7 200	0,8	5,4	≤50	116	95	FCC2SDL128#P095#5##1E3
	1 300	48	68	84	96	7 800	1,0	4,3	≤60	86	175	FCC2SDL138#L175#3##2E3
	1 600	47	67	82	94	9 600	0,9	5,0	≤60	116	120	FCC2SDL168#P120#5##1E3
	1 800	47	67	83	95	10 800	1,1	4,0	≤60	86	225	FCC2SDL188#L225#3##2E3
	1 900	43	61	75	86	11 400	1,1	4,9	≤60	116	136	FCC2SDL198#P136#5##1E3
	2 100	60	85	100	100	11 550	0,6	4,6	≤60	116	155	FCC2SDL218#P155#5##2E3
	2 400	60	86	100	100	12 000	0,6	4,5	≤60	116	175	FCC2SDL248#P175#5##2E3
	3 000	68	96	100	100	15 000	0,8	2,7	≤60	116	230	FCC2SDL308#P230#5##2E3
700 2Q	350	35	50	61	70	3 600	1,6	5,1	≤60	76	95	FCC2QDL357#H095#3##1E3
	480	31	45	55	64	3 840	2,1	4,7	≤60	76	120	FCC2QDL487#H120#3##1E3
		36	51	62	71	3 840	1,4	5,6	≤60	86	95	FCC2QDL487#L095#3##1E3
	500*	35	50	61	70	1 680	1,6	5,1	≤50	76	95	FCC2QDL507#H095#3##2E3
	580	30	43	52	60	5 800	2,4	4,6	≤60	76	136	FCC2QDL587#H136#3##1E3
	620	39	56	68	79	6 200	1,5	4,3	≤60	76	155	FCC2QDL627#H155#3##1E3
	660*	36	51	62	71	2 200	1,4	5,6	≤50	86	95	FCC2QDL667#L095#3##2E3
	700*	32	46	56	65	1 680	2,0	4,7	≤60	76	120	FCC2QDL707#H120#3##2E3
	700	38	55	67	77	7 200	1,6	4,2	≤60	76	175	FCC2QDL707#H175#3##1E3
	750	32	47	57	66	7 200	2,0	4,6	≤60	86	136	FCC2QDL757#L136#3##1E3
	780	33	48	59	68	7 800	1,9	4,6	≤60	86	136	FCC2QDL787#L136#3##1E3
	850*	31	45	55	64	1 680	2,3	4,3	≤60	76	155	FCC2QDL857#H155#3##2E3
	900*	35	50	61	70	3 350	1,7	4,8	≤60	86	120	FCC2QDL907#L120#3##2E3
	920	41	58	71	82	9 200	1,1	5,4	≤60	116	95	FCC2QDL927#P095#5##1E3
	950	39	56	68	79	9 500	1,5	4,3	≤60	86	175	FCC2QDL957#L175#3##2E3
	1 000*	44	63	70	70	3 200	1,2	4,2	≤60	76	175	FCC2QDL108#H175#3##2E3
	1 200*	43	67	70	70	2 350	1,0	4,4	≤60	86	155	FCC2QDL128#L155#3##1E3
	1 200	37	53	65	75	7 200	1,4	5,0	≤60	116	120	FCC2QDL128#P120#5##2E3

*≤100 FIT Failure Rate

(1) Maximum permissible peak current, (2) Thermal resistance from hotspot to ambient (free convection)

U_R ≤85°C (V_{DC})	C_R (µF)	I_{max} 70°C, 1kHz (A)	I_{max} 60°C, 1kHz (A)	I_{max} 50°C, 1kHz (A)	I_{max} ≤40°C, 1kHz (A)	Î (1) (A)	ESR_{typ} 20°C, 1kHz (mΩ)	R_{th} (2) (K/W)	L_S 20°C (nH)	D ±1,0 (mm)	H ±1,0 (mm)	ORDER CODE "#" to be defined, see ordering code table
700 2Q	1 400*	48	68	70	70	4 500	1,0	4,3	≤50	86	175	FCC2QDL148#L175#3##2E3
	1 500	43	61	75	86	9 000	1,1	4,9	≤60	116	136	FCC2QDL158#P136#5##1E3
		52	74	90	100	9 000	0,8	4,6	≤60	116	155	FCC2QDL158#P155#5##2E3
	1 800	47	67	82	94	10 800	1,0	4,5	≤60	116	175	FCC2QDL188#P175#5##2E3
	2 300	68	96	100	100	13 800	0,8	2,7	≤60	116	230	FCC2QDL238#P230#5##2E3
800 2K	280	34	48	59	68	2 800	1,7	5,1	≤50	76	95	FCC2KDL287#H095#3##1E3
	350*	34	48	59	68	1 550	1,7	5,1	≤50	76	95	FCC2KDL357#H095#3##2E3
	370	35	49	60	69	3 700	1,5	5,6	≤50	86	95	FCC2KDL377#L095#3##1E3
	380	30	41	51	58	3 800	2,2	4,7	≤60	76	120	FCC2KDL387#H120#3##1E3
	430	28	40	49	57	4 300	2,6	4,6	≤60	76	136	FCC2KDL437#H136#3##1E3
	470	38	54	66	76	4 700	1,6	4,3	≤60	76	155	FCC2KDL477#H155#3##2E3
	490*	35	49	60	69	2 000	1,5	5,6	≤50	86	95	FCC2KDL497#L095#3##2E3
	500*	31	45	55	64	1 600	2,1	4,7	≤60	76	120	FCC2KDL507#H120#3##2E3
	510	34	48	59	68	5 100	1,8	4,8	≤60	86	120	FCC2KDL517#L120#3##1E3
	560	35	51	63	73	5 600	1,7	4,2	≤60	76	175	FCC2KDL567#H175#3##2E3
	580	33	47	57	65	5 800	2,0	4,6	≤60	86	136	FCC2KDL587#L136#3##1E3
	640	39	55	67	77	6 400	1,5	4,4	≤50	86	155	FCC2KDL647#L155#3##2E3
	650*	45	65	70	70	3 200	1,1	4,3	≤60	76	155	FCC2KDL657#H155#3##2E3
		34	48	59	68	3 200	1,8	4,8	≤60	86	120	FCC2KDL657#L120#3##2E3
	710	41	58	71	82	7 100	1,1	5,4	≤50	116	95	FCC2KDL717#P095#5##1E3
	730*	44	63	70	70	3 100	1,2	4,2	≤60	76	175	FCC2KDL737#H175#3##2E3
	750	36	54	66	76	7 500	1,3	4,3	≤60	86	175	FCC2KDL757#L175#3##2E3
	770*	33	48	59	68	2 100	1,9	4,6	≤60	86	136	FCC2KDL777#L136#3##2E3
	780*	33	48	58	67	2 150	2,0	4,4	≤60	86	155	FCC2KDL787#L155#3##2E3
	850*	47	67	70	70	4 100	1,0	4,4	≤60	86	155	FCC2KDL857#L155#3##2E3
	950*	45	65	70	70	4 130	1,1	4,3	≤60	86	175	FCC2KDL957#L175#3##2E3
	970	40	58	71	82	7 760	1,2	5,0	≤60	116	120	FCC2KDL977#P120#5##1E3
	1 000	42	60	73	85	8 000	1,4	4,0	≤60	86	225	FCC2KDL108#L225#3##2E3
		38	54	66	76	8 000	1,4	4,9	≤60	116	136	FCC2KDL108#P136#5##1E3
	1 200	52	74	90	100	9 600	0,8	4,6	≤60	116	155	FCC2KDL128#P155#5##2E3
	1 400	44	66	81	94	11 200	0,8	4,5	≤60	116	175	FCC2KDL148#P175#5##2E3
	1 800	60	86	100	100	11 700	1,0	2,7	≤60	116	230	FCC2KDL188#P230#5##2E3
	2 000	63	90	100	100	12 000	0,7	3,5	≤80	136	175	FCC2KDL208#T175#5##2E3
	2 700	65	93	100	100	16 200	0,8	2,9	≤80	136	230	FCC2KDL278#T230#5##2E3
	3 100	70	100	100	100	18 600	1,0	2,0	≤80	136	252	FCC2KDL318#T252#5##2E3
	3 300	71	100	100	100	19 800	0,9	2,2	≤80	116	345	FCC2KDL338#P345#5##3E3
	4 300	78	100	100	100	25 800	0,9	1,8	≤80	136	345	FCC2KDL438#T345#5##3E3
900 R2	280	31	44	54	63	2 800	2,0	5,1	≤50	76	95	FCCR2DL287#H095#3##1E3
	350*	34	48	59	68	1 500	1,7	5,1	≤50	76	95	FCCR2DL357#H095#3##2E3
	370	33	47	58	67	3 700	1,6	5,6	≤50	86	95	FCCR2DL377#L095#3##1E3
	380	28	40	49	56	3 800	2,6	4,7	≤60	76	120	FCCR2DL387#H120#3##1E3
	430	27	39	47	55	4 300	2,9	4,6	≤60	76	136	FCCR2DL437#H136#3##1E3
	470	36	52	64	74	4 700	1,7	4,3	≤60	76	155	FCCR2DL477#H155#3##2E3
	490*	35	49	60	69	2 000	1,5	5,6	≤50	86	95	FCCR2DL497#L095#3##2E3
	500*	31	45	55	64	1 600	2,1	4,7	≤60	76	120	FCCR2DL507#H120#3##2E3
	510	31	44	54	62	5 100	2,1	4,8	≤60	86	120	FCCR2DL517#L120#3##1E3
	560	34	49	60	69	5 600	2,0	4,2	≤60	76	175	FCCR2DL567#H175#3##2E3
	580	31	44	54	62	5 800	2,2	4,6	≤60	86	136	FCCR2DL587#L136#3##1E3
	600*	31	44	54	62	1 580	2,4	4,3	≤60	76	155	FCCR2DL607#H155#3##2E3
	640	39	55	67	77	6 400	1,5	4,4	≤50	86	155	FCCR2DL647#L155#3##2E3
	650*	45	65	70	70	3 100	1,1	4,3	≤60	76	155	FCCR2DL657#H155#3##2E3
		31	44	54	62	3 100	2,1	4,8	≤60	86	120	FCCR2DL657#L120#3##2E3
	710	39	56	68	79	7 100	1,2	5,4	≤50	116	95	FCCR2DL717#P095#5##1E3
	730*	44	63	70	70	3 200	1,2	4,2	≤60	76	175	FCCR2DL737#H175#3##2E3
	750	38	53	66	76	7 500	1,6	4,3	≤60	86	175	FCCR2DL757#L175#3##2E3
	770*	33	48	59	68	2 100	1,9	4,6	≤60	86	136	FCCR2DL777#L136#3##2E3

*≤100 FIT Failure Rate

(1) Maximum permissible peak current, (2) Thermal resistance from hotspot to ambient (free convection)

>>

DC LINK

U_R ≤85°C (V_{DC})	C_R (µF)	I_{max} 70°C, 1kHz (A)	I_{max} 60°C, 1kHz (A)	I_{max} 50°C, 1kHz (A)	I_{max} ≤40°C, 1kHz (A)	Î (1) (A)	ESR_{typ} 20°C, 1kHz (mΩ)	R_{th} (2) (K/W)	L_S 20°C (nH)	D ±1,0 (mm)	H ±1,0 (mm)	ORDER CODE "#" to be defined, see ordering code table
900 R2	780*	33	48	58	67	2 150	2,0	4,4	≤60	86	155	FCCR2DL787#L155#3##2E3
	850*	47	67	70	70	4 000	1,0	4,4	≤60	86	155	FCCR2DL857#L155#3##2E3
	950*	37	52	63	70	4 150	1,7	4,3	≤60	86	175	FCCR2DL957#L175#3##2E3
	970	39	55	68	78	7 600	1,3	5,0	≤60	116	120	FCCR2DL977#P120#5##1E3
	1 000	40	58	71	82	8 000	1,5	4,0	≤60	86	225	FCCR2DL108#L225#3##2E3
		36	52	64	74	8 000	1,5	4,9	≤60	116	136	FCCR2DL108#P136#5##1E3
	1 200	47	66	81	93	9 600	1,0	4,6	≤60	116	155	FCCR2DL128#P155#5##2E3
	1 400	50	70	86	99	11 200	0,9	4,5	≤60	116	175	FCCR2DL148#P175#5##2E3
	1 800	58	82	100	100	11 700	1,1	2,7	≤60	116	230	FCCR2DL188#P230#5##2E3
	2 000	70	100	100	100	12 000	0,8	2,5	≤80	136	175	FCCR2DL208#T175#5##2E3
	2 700	61	88	100	100	16 200	0,9	2,9	≤80	136	230	FCCR2DL278#T230#5##2E3
	3 100	67	95	100	100	18 600	1,1	2,0	≤80	136	252	FCCR2DL318#T252#5##2E3
	3 300	67	95	100	100	19 800	1,0	2,2	≤80	116	345	FCCR2DL338#P345#5##3E3
	4 300	74	100	100	100	25 800	1,0	1,8	≤80	136	345	FCCR2DL438#T345#5##3E3
1000 3A	220	29	40	50	57	2 420	2,4	5,1	≤50	76	95	FCC3ADL227#H095#3##1E3
	290	31	44	64	62	3 190	1,8	5,6	≤50	86	95	FCC3ADL297#L095#3##1E3
	300*	32	45	56	64	1 500	1,9	5,1	≤50	76	95	FCC3ADL307#H095#3##2E3
	330	25	36	44	51	3 630	3,3	4,6	≤60	76	136	FCC3ADL337#H136#3##1E3
	360	35	49	60	69	3 960	1,9	4,3	≤60	76	155	FCC3ADL367#H155#3##2E3
	400*	31	44	54	62	1 580	2,2	4,7	≤60	76	120	FCC3ADL407#H120#3##2E3
		33	47	58	67	1 580	1,6	5,6	≤50	86	95	FCC3ADL407#L095#3##2E3
	420	34	49	60	69	4 620	2,0	4,2	≤60	76	175	FCC3ADL427#H175#3##2E3
	450	32	46	56	64	4 950	2,1	4,6	≤60	86	136	FCC3ADL457#L136#3##1E3
	490*	29	42	52	60	1 600	2,6	4,3	≤60	76	155	FCC3ADL497#H155#3##2E3
	500	37	52	65	75	5 000	1,6	4,4	≤50	86	155	FCC3ADL507#L155#3##2E3
	520*	44	62	70	70	1 600	1,2	4,3	≤60	76	155	FCC3ADL527#H155#3##2E3
	540*	33	47	57	66	2 000	1,9	4,8	≤60	86	120	FCC3ADL547#L120#3##2E3
	540	39	56	68	79	5 400	1,2	5,4	≤50	116	95	FCC3ADL547#P095#5##1E3
	560	37	52	64	73	5 600	1,7	4,3	≤60	86	175	FCC3ADL567#L175#3##2E3
	590*	42	61	70	70	3 000	1,3	4,2	≤60	76	175	FCC3ADL597#H175#3##2E3
	600*	32	47	57	66	3 120	2,0	4,6	≤60	86	136	FCC3ADL607#L136#3##2E3
	640*	32	47	57	66	3 250	2,1	4,4	≤60	86	155	FCC3ADL647#L155#3##2E3
	680*	44	64	70	70	3 280	1,1	4,4	≤60	86	155	FCC3ADL687#L155#3##2E3
	740	39	55	68	79	7 400	1,3	5,0	≤60	116	120	FCC3ADL747#P120#5##1E3
	780*	45	65	70	70	4 000	1,1	4,3	≤60	86	175	FCC3ADL787#L175#3##2E3
	810	39	55	68	79	8 100	1,6	4,0	≤60	86	225	FCC3ADL817#L225#3##2E3
	860	35	51	62	71	8 600	1,6	4,9	≤60	116	136	FCC3ADL867#P136#5##1E3
	900	49	70	85	98	8 760	0,9	4,6	≤60	116	155	FCC3ADL907#P155#5##2E3
	1 100	50	70	86	99	8 800	0,9	4,5	≤60	116	175	FCC3ADL118#P175#5##2E3
	1 400	58	82	100	100	11 200	1,1	2,7	≤60	116	230	FCC3ADL148#P230#5##2E3
	1 500	70	100	100	100	12 000	0,8	2,5	≤80	136	175	FCC3ADL158#T175#5##2E3
	2 100	61	88	100	100	12 600	0,9	2,9	≤80	136	230	FCC3ADL218#T230#5##2E3
	2 200	64	91	100	100	13 200	1,1	2,2	≤80	116	345	FCC3ADL228#P345#5##3E3
	2 400	67	95	100	100	14 400	1,1	2,0	≤80	136	252	FCC3ADL248#T252#5##2E3
	3 200	71	100	100	100	19 200	1,1	1,8	≤80	136	345	FCC3ADL328#T345#5##3E3
1100 A3	170	27	38	47	54	2 040	2,7	5,1	≤50	76	95	FCCA3DL177#H095#3##1E3
	220*	31	44	54	63	1 550	2,0	5,1	≤50	76	95	FCCA3DL227#H095#3##2E3
	240	26	37	45	52	2 880	3,1	4,7	≤60	76	120	FCCA3DL247#H120#3##1E3
		31	43	53	61	2 880	1,9	5,6	≤50	86	95	FCCA3DL247#L095#3##1E3
	270	25	36	44	51	3 240	3,4	4,6	≤60	76	136	FCCA3DL277#H136#3##1E3
	300*	29	41	51	58	1 600	2,5	4,7	≤60	76	120	FCCA3DL307#H120#3##2E3
	300	34	48	59	68	3 600	2,0	4,3	≤60	76	155	FCCA3DL307#H155#3##2E3
	300*	32	46	56	65	1 600	1,7	5,6	≤50	86	95	FCCA3DL307#L095#3##2E3
	320	30	41	51	58	3 840	2,4	4,8	≤60	86	120	FCCA3DL327#L120#3##1E3
	350*	27	39	48	56	1 650	3,0	4,3	≤60	76	155	FCCA3DL357#H155#3##2E3
	350	32	46	56	64	4 200	2,3	4,2	≤60	76	175	FCCA3DL357#H175#3##2E3

*≤100 FIT Failure Rate

(1) Maximum permissible peak current, (2) Thermal resistance from hotspot to ambient (free convection)

U_R ≤85°C (V_{DC})	C_R (µF)	I_{max} 70°C, 1kHz (A)	I_{max} 60°C, 1kHz (A)	I_{max} 50°C, 1kHz (A)	I_{max} ≤40°C, 1kHz (A)	Î (1) (A)	ESR_{typ} 20°C, 1kHz (mΩ)	R_{th} (2) (K/W)	L_S 20°C (nH)	D ±1,0 (mm)	H ±1,0 (mm)	ORDER CODE "#" to be defined, see ordering code table
1100 A3	400*	42	60	70	70	3 100	1,3	4,3	≤60	76	155	FCCA3DL407#H155#3##2E3
		31	45	55	63	3 100	2,1	4,8	≤60	86	120	FCCA3DL407#L120#3##2E3
	420	30	43	52	60	5 040	2,4	4,6	≤60	86	136	FCCA3DL427#L136#3##1E3
		40	57	70	81	5 040	1,4	4,4	≤50	86	155	FCCA3DL427#L155#3##2E3
	430*	30	43	52	60	3 250	2,4	4,6	≤60	86	136	FCCA3DL437#L136#3##2E3
	440*	41	58	70	70	3 280	1,4	4,2	≤60	76	175	FCCA3DL447#H175#3##2E3
	450	37	53	65	75	5 400	1,3	5,4	≤50	116	95	FCCA3DL457#P095#5##1E3
	480	35	50	62	71	5 760	1,8	4,3	≤60	86	175	FCCA3DL487#L175#3##2E3
	500*	43	62	70	70	3 940	1,2	4,4	≤60	86	155	FCCA3DL507#L155#3##2E3
	580*	44	62	70	70	3 980	1,2	4,3	≤60	86	175	FCCA3DL587#L175#3##2E3
	620	36	52	63	73	6 200	1,5	5,0	≤60	116	120	FCCA3DL627#P120#5##1E3
	650	37	53	65	75	6 500	1,8	4,0	≤60	86	225	FCCA3DL657#L225#3##2E3
	690	34	49	60	69	6 900	1,7	4,9	≤60	116	136	FCCA3DL697#P136#5##1E3
	770	47	66	81	93	7 700	1,0	4,6	≤60	116	155	FCCA3DL777#P155#5##2E3
	910	47	67	82	94	9 100	1,0	4,5	≤60	116	175	FCCA3DL917#P175#5##2E3
	1 200	55	79	96	100	9 600	1,2	2,7	≤60	116	230	FCCA3DL128#P230#5##2E3
		66	94	100	100	9 600	0,9	2,5	≤80	136	175	FCCA3DL128#T175#5##2E3
	1 700	58	83	100	100	13 600	1,0	2,9	≤80	136	230	FCCA3DL178#T230#5##2E3
	1 900	67	95	100	100	15 200	1,1	2,0	≤80	136	252	FCCA3DL198#T252#5##2E3
	2 000	59	84	100	100	16 000	1,3	2,2	≤80	116	345	FCCA3DL208#P345#5##3E3
	2 900	74	100	100	100	23 200	1,0	1,8	≤80	136	345	FCCA3DL298#T345#5##3E3
1200 3B	140	26	36	44	51	1 680	3,0	5,1	≤50	76	95	FCC3BDL147#H095#3##1E3
	180*	31	43	53	61	1 520	2,1	5,1	≤60	76	95	FCC3BDL187#H095#3##2E3
	190	29	41	51	58	2 280	2,1	5,6	≤50	86	95	FCC3BDL197#L095#3##1E3
	200	25	35	43	50	2 400	3,4	4,7	≤50	76	120	FCC3BDL207#H120#3##1E3
	220	24	34	42	48	2 640	3,7	4,6	≤60	76	136	FCC3BDL227#H136#3##1E3
	240	32	46	56	65	2 880	2,2	4,3	≤60	76	155	FCC3BDL247#H155#3##2E3
	250*	27	39	48	55	1 980	2,8	4,7	≤60	76	120	FCC3BDL257#H120#3##2E3
		31	45	55	63	1 980	1,8	5,6	≤50	86	95	FCC3BDL257#L095#3##2E3
	260	27	39	48	55	3 120	2,7	4,8	≤60	86	120	FCC3BDL267#L120#3##1E3
	280	30	44	53	62	3 360	2,5	4,2	≤60	76	175	FCC3BDL287#H175#3##2E3
	300	28	41	50	58	3 600	2,6	4,6	≤60	86	136	FCC3BDL307#L136#3##1E3
	330*	42	59	70	70	2 130	1,3	4,3	≤60	76	155	FCC3BDL337#H155#3##2E3
	330	35	50	61	71	3 960	1,8	4,4	≤50	86	155	FCC3BDL337#L155#3##2E3
	360	36	51	63	73	4 320	1,4	5,4	≤50	116	95	FCC3BDL367#P095#5##1E3
	370*	41	58	70	70	2 590	1,4	4,2	≤60	76	175	FCC3BDL377#H175#3##2E3
	380*	29	42	51	59	2 600	2,5	4,6	≤60	86	136	FCC3BDL387#L136#3##2E3
	380	35	51	62	72	4 560	1,8	4,3	≤60	86	175	FCC3BDL387#L175#3##2E3
	400*	29	42	51	59	2 800	2,6	4,4	≤60	86	155	FCC3BDL407#L155#3##2E3
	420*	44	62	70	70	3 000	1,2	4,4	≤60	86	155	FCC3BDL427#L155#3##2E3
	480*	42	60	70	70	3 190	1,3	4,3	≤60	86	175	FCC3BDL487#L175#3##2E3
	500	34	49	59	69	5 500	1,7	5,0	≤60	116	120	FCC3BDL507#P120#5##1E3
	540	35	50	61	71	5 940	2,0	4,0	≤60	86	225	FCC3BDL547#L225#3##2E3
	570	32	46	57	66	6 270	1,9	4,9	≤60	116	136	FCC3BDL577#P136#5##1E3
	620	44	63	77	89	6 820	1,1	4,6	≤60	116	155	FCC3BDL627#P155#5##2E3
	720	43	60	74	86	7 920	1,2	4,5	≤60	116	175	FCC3BDL727#P175#5##2E3
	950	53	75	92	100	9 500	1,3	2,7	≤60	116	230	FCC3BDL957#P230#5##2E3
	1 000	63	89	100	100	10 000	1,0	2,5	≤80	136	175	FCC3BDL108#T175#5##2E3
	1 400	55	79	97	100	14 000	1,1	2,9	≤80	136	230	FCC3BDL148#T230#5##2E3
	1 600	67	95	100	100	16 000	1,0	2,2	≤80	116	345	FCC3BDL168#P345#5##3E3
		64	91	100	100	16 000	1,2	2,0	≤80	136	252	FCC3BDL168#T252#5##2E3
	2 200	74	100	100	100	23 200	1,0	1,8	≤80	136	345	FCC3BDL228#T345#5##3E3
1300 O3	120	24	34	42	49	1 440	3,3	5,1	≤50	76	95	FCCO3DL127#H095#3##1E3
	160	23	34	42	48	1 920	3,7	4,7	≤60	76	120	FCCO3DL167#H120#3##1E3
		28	39	48	56	1 920	2,3	5,6	≤50	86	95	FCCO3DL167#L095#3##1E3
	180	23	33	40	46	2 160	4,1	4,6	≤60	76	136	FCCO3DL187#H136#3##1E3

*≤100 FIT Failure Rate

(1) Maximum permissible peak current, (2) Thermal resistance from hotspot to ambient (free convection)

>>

DC LINK

U_R ≤85°C (V_{DC})	C_R (µF)	I_{max} 70°C, 1kHz (A)	I_{max} 60°C, 1kHz (A)	I_{max} 50°C, 1kHz (A)	I_{max} ≤40°C, 1kHz (A)	Î (1) (A)	ESR_{typ} 20°C, 1kHz (mΩ)	R_{th} (2) (K/W)	L_S 20°C (nH)	D ±1,0 (mm)	H ±1,0 (mm)	ORDER CODE "#" to be defined, see ordering code table
1300 03	210	31	44	54	62	2 520	2,4	4,3	≤60	76	155	FCC03DL217#H155#3##2E3
	220	28	40	49	57	2 640	2,6	4,8	≤60	86	120	FCC03DL227#L120#3##1E3
	240	29	41	51	58	2 880	2,8	4,2	≤60	76	175	FCC03DL247#H175#3##2E3
	250	27	39	47	55	3 000	2,9	4,6	≤60	86	136	FCC03DL257#L136#3##1E3
	280	36	52	63	73	3 360	1,7	4,4	≤50	86	155	FCC03DL287#L155#3##2E3
	310	34	48	59	68	3 720	1,6	5,4	≤50	116	95	FCC03DL317#P095#5##1E3
	320	34	49	61	70	3 840	1,9	4,3	≤60	86	175	FCC03DL327#L175#3##2E3
	420	33	47	58	67	5 040	1,8	5,0	≤60	116	120	FCC03DL427#P120#5##1E3
	450	33	48	58	67	5 400	2,2	4,0	≤60	86	225	FCC03DL457#L225#3##2E3
	480	31	44	54	62	5 760	2,1	4,9	≤60	116	136	FCC03DL487#P136#5##1E3
	530	44	63	77	89	6 360	1,1	4,6	≤60	116	155	FCC03DL537#P155#5##2E3
	630	45	64	78	90	7 560	1,1	4,5	≤60	116	175	FCC03DL637#P175#5##2E3
	820	49	70	86	99	9 840	1,5	2,7	≤60	116	230	FCC03DL827#P230#5##2E3
	880	60	85	100	100	10 560	1,1	2,5	≤80	136	175	FCC03DL887#T175#5##2E3
	1 200	53	76	93	100	13 200	1,2	2,9	≤80	136	230	FCC03DL128#T230#5##2E3
	1 300	62	88	100	100	14 300	1,3	2,0	≤80	136	252	FCC03DL138#T252#5##2E3
	1 400	61	87	100	100	15 400	1,2	2,2	≤80	116	345	FCC03DL148#P345#5##3E3
	1 900	68	96	100	100	20 900	1,2	1,8	≤80	136	345	FCC03DL198#T345#5##3E3
1500 C3	110*	27	39	48	55	1 340	2,6	5,1	≤50	76	95	FCCC3DL117#H095#3##2E3
	140*	28	40	49	57	1 360	2,2	5,6	≤50	86	95	FCCC3DL147#L095#3##2E3
	150*	25	36	44	51	1 420	3,3	4,7	≤60	76	120	FCCC3DL157#H120#3##2E3
	160*	24	34	42	48	1 450	4,0	4,3	≤60	76	155	FCCC3DL167#H155#3##2E3
	170	24	35	43	50	2 040	3,3	4,8	≤60	86	120	FCCC3DL177#L120#3##1E3
	180*	38	54	66	70	1 560	1,6	4,3	≤60	76	155	FCCC3DL187#H155#3##2E3
		28	39	48	56	1 560	2,7	4,8	≤60	86	120	FCCC3DL187#L120#3##2E3
	200*	37	53	65	70	2 200	1,7	4,2	≤60	76	175	FCCC3DL207#H175#3##2E3
	210	33	48	58	67	2 520	2,0	4,4	≤60	86	155	FCCC3DL217#L155#3##2E3
	220*	26	37	46	53	2 460	3,1	4,6	≤60	86	136	FCCC3DL227#L136#3##2E3
	240*	40	57	70	70	2 590	1,4	4,4	≤60	86	155	FCCC3DL247#L155#3##2E3
	270*	39	56	68	70	3 100	1,5	4,3	≤60	86	175	FCCC3DL277#L175#3##2E3
	310	30	44	53	62	3 720	2,1	5,0	≤60	116	120	FCCC3DL317#P120#5##1E3
	330	31	45	55	63	3 960	2,5	4,0	≤60	86	225	FCCC3DL337#L225#3##2E3
	400	39	56	68	79	4 800	1,4	4,6	≤60	116	155	FCCC3DL407#P155#5##2E3
	600	46	66	81	93	7 200	1,7	2,7	≤60	116	230	FCCC3DL607#P230#5##2E3
	1 000	67	95	100	100	12 000	1,0	2,2	≤80	116	345	FCCC3DL108#P345#5##3E3
		70	100	100	100	12 000	1,0	2,0	≤80	136	252	FCCC3DL108#T252#5##2E3
	1 400	74	100	100	100	16 800	1,0	1,8	≤80	136	345	FCCC3DL148#T345#5##3E3
1700 F3	130	24	35	42	49	1 560	3,5	4,8	≤60	86	120	FCCF3DL137#L120#3##1E3
	160	31	44	54	63	1 920	2,3	4,4	≤60	86	155	FCCF3DL167#L155#3##2E3
	240	25	35	43	50	2 880	3,2	5,0	≤60	116	120	FCCF3DL247#P120#5##1E3
	250	29	42	51	59	3 000	2,9	4,0	≤60	86	225	FCCF3DL257#L225#3##2E3
	300	26	38	46	53	3 600	3,0	4,6	≤60	116	155	FCCF3DL307#P155#5##2E3
	460	36	51	62	72	5 520	2,8	2,7	≤60	116	230	FCCF3DL467#P230#5##2E3
	760	44	63	77	89	9 120	2,5	2,0	≤80	136	252	FCCF3DL767#T252#5##2E3
2000 3D	100	23	32	40	46	1 200	4,0	4,8	≤60	86	120	FCC3DDL107#L120#3##1E3
	120	24	34	42	48	1 440	3,8	4,4	≤60	86	155	FCC3DDL127#L155#3##2E3
	190	27	39	48	55	2 280	3,3	4,0	≤60	86	225	FCC3DDL197#L225#3##2E3
	190	27	38	47	54	2 280	2,7	5,0	≤60	116	120	FCC3DDL197#P120#5##1E3
	240	35	49	60	70	2 880	1,8	4,6	≤60	116	155	FCC3DDL247#P155#5##2E3
	370	41	58	71	82	4 440	2,2	2,7	≤60	116	230	FCC3DDL377#P230#5##2E3
	600	61	87	100	100	6 000	1,2	2,2	≤80	116	345	FCC3DDL607#P345#5##3E3
		64	91	100	100	6 000	1,2	2,0	≤80	136	252	FCC3DDL607#T252#5##1E3
	800	71	100	100	100	9 600	1,1	1,8	≤80	136	345	FCC3DDL807#T345#5##3E3
2200 D2	90	24	34	42	48	1 080	3,7	4,6	≤60	86	136	FCCD2DL906#L136#3##1E3
	140	30	43	52	60	1 680	2,2	5,0	≤60	116	120	FCCD2DL147#P120#5##2E3
	150	36	51	63	73	1 800	1,9	4,0	≤60	86	225	FCCD2DL157#L225#3##2E3
	170	29	42	51	59	2 040	2,5	4,6	≤60	116	155	FCCD2DL177#P155#5##2E3

*≤100 FIT Failure Rate

(1) Maximum permissible peak current, (2) Thermal resistance from hotspot to ambient (free convection)

U_R ≤85°C (V_{DC})	C_R (µF)	I_{max} 70°C, 1kHz (A)	60°C, 1kHz (A)	50°C, 1kHz (A)	≤40°C, 1kHz (A)	Î [1] (A)	ESR_{typ} 20°C, 1kHz (mΩ)	R_{th} [2] (K/W)	L_S 20°C (nH)	D ±1,0 (mm)	H ±1,0 (mm)	ORDER CODE "#" to be defined, see ordering code table
2200 D2	210	45	64	78	90	2 520	1,1	4,5	≤60	116	175	FCCD2DL217#P175#5##2E3
	290	51	73	89	100	3 480	1,4	2,7	≤60	116	230	FCCD2DL297#P230#5##2E3
	400	53	76	93	100	4 800	1,2	2,9	≤80	136	230	FCCD2DL407#T230#5##2E3
	450	61	87	100	100	5 400	1,2	2,2	≤80	116	345	FCCD2DL457#P345#5##3E3
	500	62	87	100	100	6 000	1,3	2,0	≤80	136	252	FCCD2DL507#T252#5##2E3
	660	71	100	100	100	7 920	1,1	1,8	≤80	136	345	FCCD2DL667#T345#5##3E3
2600 3E	63	23	33	41	47	756	4,1	4,4	≤60	86	155	FCC3EDL636#L155#3##1E3
	100	32	46	56	65	1 200	2,4	4,0	≤60	86	225	FCC3EDL107#L225#3##1E3
		30,8	44	53	62	1 200	2,1	5,0	≤60	116	120	FCC3EDL107#P120#5##2E3
	120	28	40	49	57	1 440	2,7	4,6	≤60	116	155	FCC3EDL127#P155#5##2E3
	140	43	61	75	86	1 680	1,2	4,5	≤60	116	175	FCC3EDL147#P175#5##2E3
	200	49	70	86	99	2 400	1,5	2,7	≤60	116	230	FCC3EDL207#P230#5##1E3
		60	85	100	100	2 400	1,1	2,5	≤80	136	175	FCC3EDL207#T175#5##2E3
	280	51	73	89	100	3 360	1,3	2,9	≤80	136	230	FCC3EDL287#T230#5##2E3
	320	56	81	99	100	3 840	1,4	2,2	≤80	116	345	FCC3EDL327#P345#5##3E3
	340	59	85	100	100	4 080	1,4	2,0	≤80	136	252	FCC3EDL347#T252#5##2E3
	450	65	92	100	100	5 400	1,3	1,8	≤80	136	345	FCC3EDL457#T345#5##3E3
2800 L3	86	28	40	49	57	1 032	2,5	5,0	≤60	116	120	FCCL3DL866#P120#5##1E3
	88	33	48	58	67	1 056	2,2	4,0	≤60	86	225	FCCL3DL886#L225#3##1E3
	100	26	38	46	53	1 200	2,9	4,9	≤60	116	136	FCCL3DL107#P136#5##1E3
	120	33	46	56	65	1 440	2,1	4,5	≤60	116	175	FCCL3DL127#P175#5##2E3
	170	51	73	89	100	2 040	1,5	2,5	≤80	136	175	FCCL3DL177#T175#5##2E3
	240	49	70	87	100	2 880	1,4	2,9	≤80	136	230	FCCL3DL247#T230#5##2E3
	270	56	81	99	100	3 240	1,4	2,2	≤80	116	345	FCCL3DL277#P345#5##3E3
	290	55	79	97	100	3 480	1,6	2,0	≤80	136	252	FCCL3DL297#T252#5##2E3
	390	68	92	100	100	4 680	1,2	1,8	≤80	136	345	FCCL3DL397#T345#5##3E3
3000 3F	46	21	31	38	43	552	4,6	4,6	≤60	86	136	FCC3FDL466#L136#3##1E3
	74	23	33	41	47	888	3,5	5,0	≤60	116	120	FCC3FDL746#P120#5##1E3
	75	32	47	57	66	900	2,3	4,0	≤60	86	225	FCC3FDL756#L225#3##1E3
	100	41	58	72	83	1 200	1,3	4,5	≤60	116	175	FCC3FDL107#P175#5##2E3
	140	50	71	87	100	1 680	1,6	2,5	≤80	136	175	FCC3FDL147#T175#5##2E3
	200	49	70	86	99	2 400	1,4	2,9	≤80	136	230	FCC3FDL207#T230#5##2E3
	240	64	91	100	100	2 880	1,1	2,2	≤80	116	345	FCC3FDL247#P345#5##3E3
	250	64	91	100	100	3 000	1,2	2,0	≤80	136	252	FCC3FDL257#T252#5##2E3
	330	74	100	100	100	3 960	1,0	1,8	≤80	136	345	FCC3FDL337#T345#5##3E3
3200 3U	64	30	41	50	58	768	2,4	5,0	≤60	116	120	FCC3UDL646#P120#5##1E3
	65	22	32	39	45	780	4,9	4,0	≤60	86	225	FCC3UDL656#L225#3##1E3
	92	41	58	72	83	1 104	1,3	4,5	≤60	116	175	FCC3UDL926#P175#5##2E3
	120	48	69	84	97	1 440	1,7	2,5	≤80	136	175	FCC3UDL127#T175#5##2E3
	180	49	70	86	99	2 160	1,4	2,9	≤80	136	230	FCC3UDL187#T230#5##2E3
	210	59	83	100	100	2 520	1,3	2,2	≤80	116	345	FCC3UDL217#P345#5##3E3
	220	59	85	100	100	2 640	1,4	2,0	≤80	136	252	FCC3UDL227#T252#5##2E3
	300	68	96	100	100	3 600	1,2	1,8	≤80	136	345	FCC3UDL307#T345#5##3E3
3600 3V	44	29	42	51	59	528	2,3	5,0	≤60	116	120	FCC3VDL446#P120#5##1E3
	45	35	50	61	71	540	2,0	4,0	≤60	86	225	FCC3VDL456#L225#3##1E3
	88	51	73	89	100	1 056	1,4	2,7	≤60	116	230	FCC3VDL886#P230#5##2E3
	120	51	73	89	100	1 440	1,3	2,9	≤80	136	230	FCC3VDL127#T230#5##2E3
	160	61	86	100	100	1 920	1,2	2,2	≤80	116	345	FCC3VDL167#P345#5##3E3
	170	62	88	100	100	2 040	1,3	2,0	≤80	136	252	FCC3VDL177#T252#5##2E3
	230	74	100	100	100	2 760	1,0	1,8	≤80	136	345	FCC3VDL237#T345#5##3E3

*≤100 FIT Failure Rate

(1) Maximum permissible peak current, (2) Thermal resistance from hotspot to ambient (free convection)

DC LINK

FEATURES

- **DC-Link**
- 105°C Type
- High ripple current capability
- Self-healing
- Long lifetime
- Plastic case
- Soldering Style

OVERVIEW

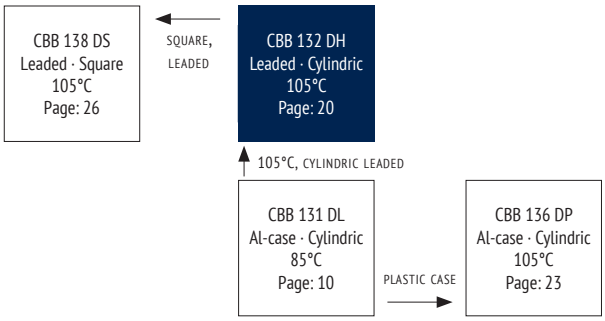

PRODUCT

APPLICATIONS

- High power frequency converters
- Motion control, welding equipment, elevators
- Photovoltaic and wind inverters

CHARACTERISTICS

ITEM	CHARACTERISTICS
Climatic Category	40/105/56 (IEC 61071)
Operating Temperature	−40 ~ +105°C ($\Theta_{hotspot}$ ≤ 105°C) $\Theta_{hotspot}$ = 85~105°C: See Voltage Derating Diagram
Storage Temperature	−40 ~ +105°C
Rated Voltage U_{RDC}	600 ~ 1 200V_{DC}
Capacitance Range	25 ~ 145µF
Capacitance Tolerance	±10% (K), ±5% (J)
Voltage between Terminals U_{TT}	1,5 * U_{RDC} (20°C, 10s)
Voltage between Terminals & Case U_{TC}	≥ 3 000V_{AC} (20°C, 50Hz, 10s)
Max. Overvoltage	Please see IEC 61071
Insulation Resistance R_i*C	≥ 5 000MΩ * µF (20°C, 100V_{DC}, 1 min)
Dielectric Dissipation Factor tan δ_o	≤ 2 * 10^{-4} (20°C, 100Hz)
Life Time Expectancy	≥ 100 000h, failure rate ≤ 50 FIT ($\Theta_{hotspot}$ ≤ 70°C, U_{RDC})
Reference Standard	IEC 61071:2007

ENVIRONMENTAL

The products are RoHS, WEEE and REACh compliant.

The detailed version please see seperate "Environmental Certificates" document or www.jianghai-europe.com

APPROVALS

UL94-V0:

Plastic & Compound Mass

UL810:

CZDS2.E227010 (Construction)

LIFETIME

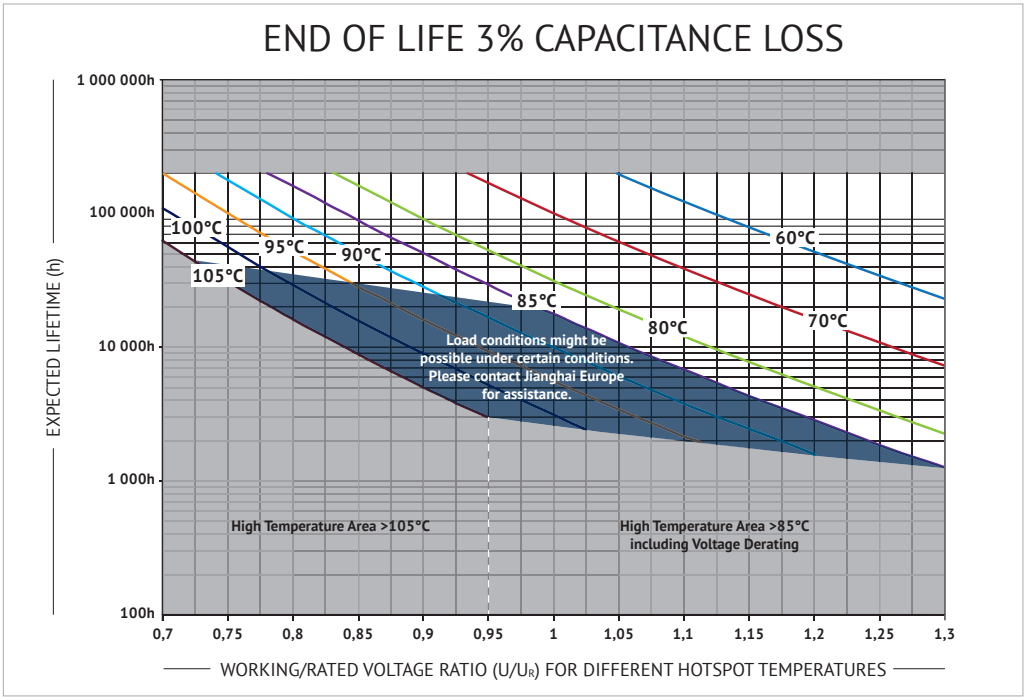

CURRENT DERATING

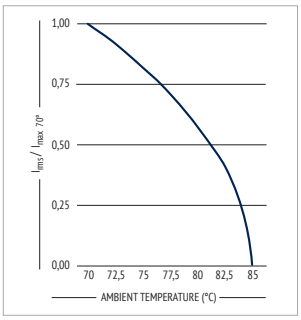

VOLTAGE DERATING

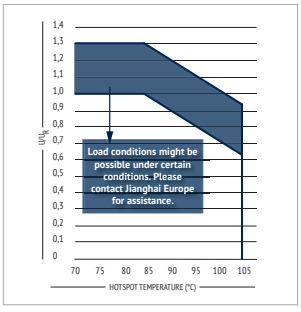

DIMENSIONS

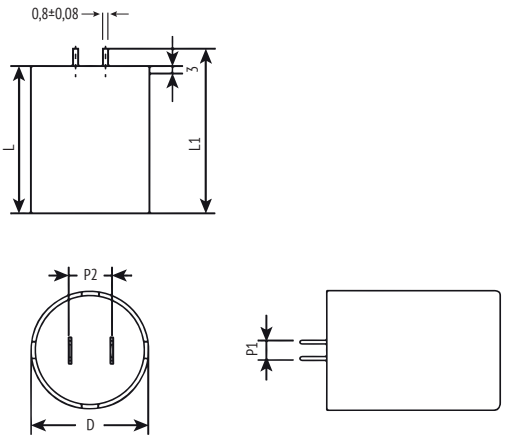

STYLE A

NO SOCKET,
4 SOLDERING PINS

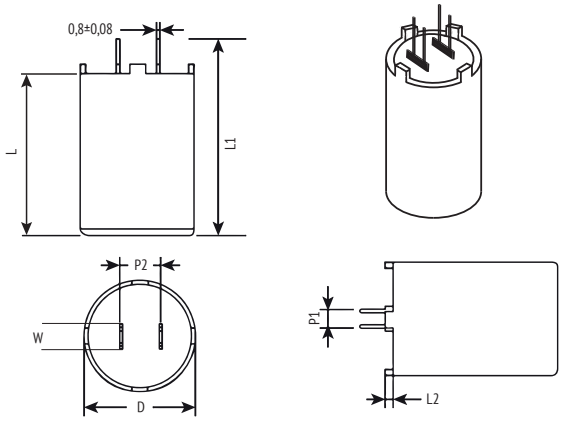

STYLE B

WITH SOCKET,
4 SOLDERING PINS

W TYPICALLY 8MM+/-1MM
L2 TYPICALLY 1,5MM+/-1MM

in mm

INTERNAL CONSTRUCTION

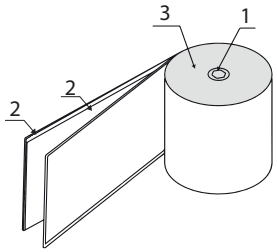

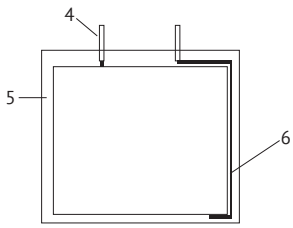

NO.	ITEM	MATERIAL
1	Winding Core	PC
2	Metallized Film	PP + Al, Zn
3	Metal Sprayed Electrode	Zn + Sn/Zn

NO.	ITEM	MATERIAL
4	Terminals	Cu, Sn-plated
5	Potting Compound	Epoxy
6	Connection Electrode Case	Cu

MARKING

Jianghai	BRAND
CBB 132	PRODUCT SERIES
60µF J 800V	CAPACITANCE, TOLERANCE AND RATED VOLTAGE
J02F12	DATE CODE

DC LINK

DC LINK

ORDER CODE

FC	C	3A	DH	117	K	K	061	W	4	A	E 3
Capacitor type	Product shape	DC rated voltage code (V)	Series code	Capacitance Code Examples (µF)	Capacitance tolerance	Diameter (mm)	Height L_1 (mm)	Terminal style P2	Bottom Bolt	Style	For internal use
Film Cap. = **FC**	cylindrical = **C**	600 **2S**	CBB 132 = **DH**	50 **506**	±5% **J**	50 **D**	59,0 **059**	12,7 **W**	M8*10 **4**	A **A**	
		800 **2K**		75 **756**	±10% **K**	56,3 **C**	61,3 **061**		without **0**	B **B**	
		1000 **3A**		80 **806**		63,5 **E**	70,6 **071**				
		1200 **3B**		110 **117**		35,9 **X**					
				120 **127**							
				145 **157**							
				200 **207**							
				220 **227**							

RATINGS

U_R ≤85°C (V_{DC})	C_R (µF)	I_{max} 70°C 10kHz (A)	Î (1) (A)	ESR_{typ} 20°C, 1kHz (mΩ)	R_{th} (2) (K/W)	dV/dt 20°C (V/µs)	D ±0,5 (mm)	L ±0,8 (mm)	L_1 ±1,3 (mm)	P_1 ±0,5 (mm)	P_2 ±0,5 (mm)	ORDER CODE "#" to be defined, see ordering code table
600 2S	30	12,4	847	8,0	8,1	28	35,9	53,7	61,3	5,1	12,7	FCC2SDH306#X061W##E3
	110	25	1650	3,5	4,6	15	50,0	63,0	70,6	5,1	12,7	FCCS2SDH117#D071W##E3
	145	35	2175	2,8	2,9	15	56,3	63,0	70,6	5,1	12,7	FCCS2SDH157#C071W##E3
		35	2900	2,5	3,3	20	63,5	51,4	59,0	5,1	12,7	FCCS2SDH157#E059W##E3
800 2K	60	16	900	5,0	7,8	15	50,0	63,0	70,6	5,1	12,7	FCC2KDH606#D071W##E3
	90	20	1350	4,0	6,3	15	56,3	63,0	70,6	5,1	12,7	FCC2KDH906#C071W##E3
		20	1800	3,0	8,3	20	63,5	51,4	59,0	5,1	12,7	FCC2KDH906#E059W##E3
1000 3A	45	15	675	6,0	7,4	15	50,0	63,0	70,6	5,1	12,7	FCCS3ADH456#D071W##E3
	60	18	900	5,0	6,2	15	56,3	63,0	70,6	5,1	12,7	FCCS3ADH606#C071W##E3
		18	1200	4,5	6,9	20	63,5	51,4	59,0	5,1	12,7	FCCS3ADH606#E059W##E3
1200 3B	25	10	500	8,9	11,2	20	50,0	63,0	70,6	5,1	12,7	FCCS3BDH256#D071W##E3
	35	15	700	6,0	7,4	20	56,3	63,0	70,6	5,1	12,7	FCCS3BDH356#C071W##E3
		15	875	5,5	8,1	25	63,5	51,4	59,0	5,1	12,7	FCCS3BDH356#E059W##E3

(1) Maximum permissible peak current, (2) Thermal resistance from hotspot to ambient (free convection)

FEATURES

- **DC-Link**
- Very low dissipation factor
- High ripple current capability
- Self-healing
- Long lifetime
- Plastic case

OVERVIEW

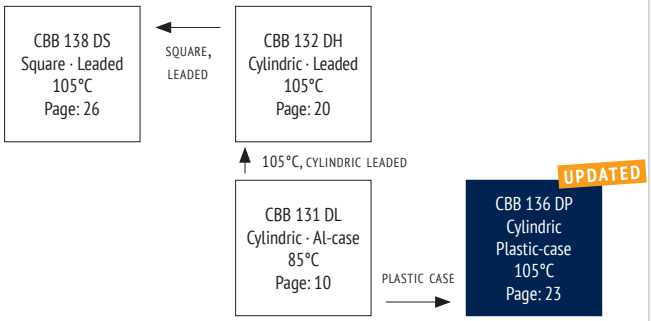

PRODUCT

APPLICATIONS

- High power frequency converters
- Motion control, welding equipment, elevators
- Photovoltaic and wind inverters

CHARACTERISTICS

ITEM	CHARACTERISTICS
Climatic Category	40/105/56 (IEC 61071)
Operating Temperature	−40 ~ +105°C ($\Theta_{hotspot}$ ≤ 105°C) $\Theta_{hotspot}$ = 85−105°C: See Voltage Derating Diagram
Storage Temperature	−40 ~ +105°C
Rated Voltage U_{RDC}	600 ~ 1 500V_{DC}
Capacitance Range	41 ~ 350µF
Capacitance Tolerance	±10% (K), ±5% (J)
Voltage between Terminals U_{TT}	1,5 * U_{RDC} (20°C, 10s)
Voltage between Terminals & Case U_{TC}	≥ 3 000V_{AC} (20°C, 50Hz, 10s)
Max. Overvoltage	Please see IEC 61071
Insulation Resistance R_i*°C	≥ 5 000MΩ * µF (20°C, 100V_{DC}, 1 min)
Dielectric Dissipation Factor tan δ_o	≤ 2 * 10^{-4} (20°C, 100Hz)
Life Time Expectancy	≥ 100 000 h, failure rate ≤ 50 FIT ($\Theta_{hotspot}$ ≤ 70°C, U_{RDC})
Reference Standard	IEC 61071:2007

ENVIRONMENTAL

The products are RoHS, WEEE and REACh compliant.

The detailed version please see seperate "Environmental Certificates" document or www.jianghai-europe.com

APPROVALS

UL94-V0:

Plastic & Compound Mass

UL810:

CZDS2.E227010 (Construction)

LIFETIME

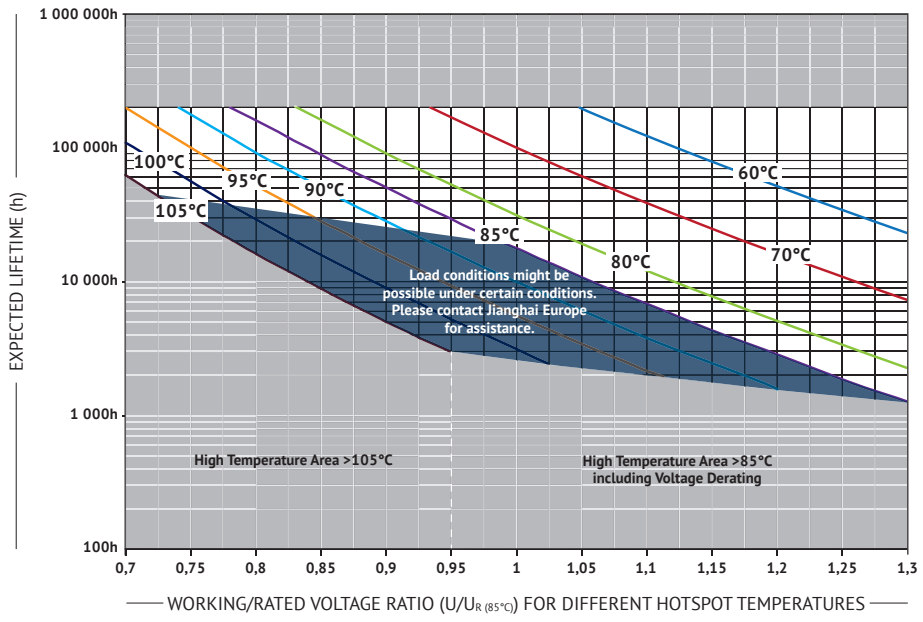

CURRENT DERATING

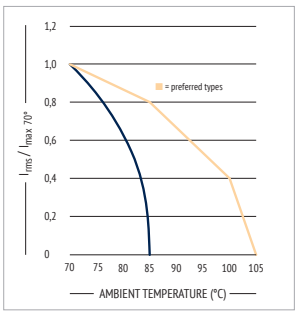

VOLTAGE DERATING

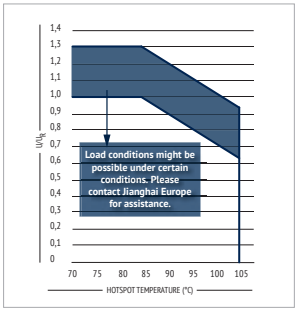

DC LINK

DIMENSIONS

STYLE A

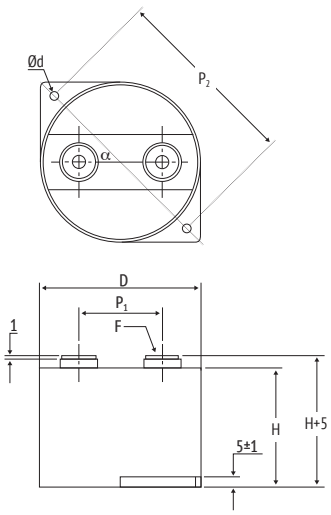

STYLE B

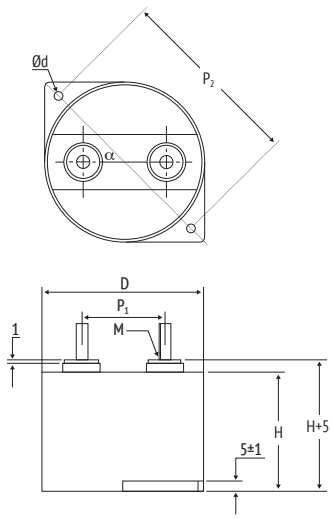

STYLE C

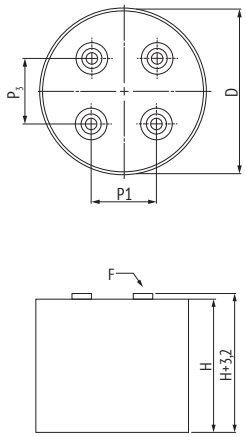

in mm

STYLE	ΦD±1 (mm)	H±1 (mm)	P_1 ± 0.5 (mm)	P_2 ± 0.5 (mm)	P_3 ± 0.5 (mm)	Terminal (mm)		Φd ± 0.5 (mm)
						F Female	M Male	
A/B	84,5	51	45	101	-	**M6*10** [order code 0]	**M8*20** [order code 3]	5,5
A/B	84,5	65	45	101	-	**M6*10** [order code 0]	**M8*20** [order code 3]	5,5
A/B	84,5	76	45	101	-	**M6*10** [order code 0]	**M8*20** [order code 3]	5,5
C	95	83	38	-	38	**M6*10** [order code 0]	-	-

α = 45°C +/- 2°

Max. torque for terminals: 5 Nm (M6), 8 Nm (M8)

Max. torque for mounting screws: 3,5 Nm

Other Terminals on request.

INTERNAL CONSTRUCTION

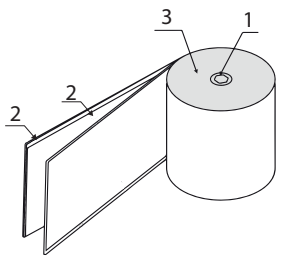

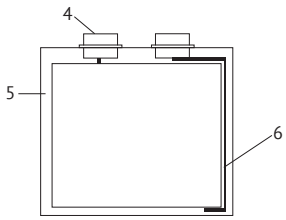

NO.	ITEM	MATERIAL
1	Winding Core	PC
2	Metallized Film	PP + Al, Zn
3	Metal Sprayed Electrode	Zn + Sn/Zn

NO.	ITEM	MATERIAL
4	Terminals	Cu, Sn-plated
5	Potting Compound	Epoxy
6	Connection Electrode Case	Cu

MARKING

Jianghai	BRAND
CBB 136	SERIES DESIGNATION
200µF ±10%	CAPACITANCE AND TOLERANCE
U_R = 600VDC	U_R RATED VOLTAGE
U_{TC} = 3000V 50/60 HZ	U_{TC} VOLTAGE BETWEEN TERMINALS AND CASE, FREQUENCY
-40~+85°C IEC61071	TEMPERATURE RANGE, REFERENCE STANDARD
Discharge before handling	SAFETY WARNING
E304F12104	DATE CODE

ORDER CODE

FC	C	3A	DP	117	K	K	065	0	4	0	A	1E 3
Capacitor type	Product shape	DC rated voltage code (V)	Series code	Capacitance Code Examples (µF)	Capacitance tolerance	Diameter (mm)	Height (mm)	Terminal style	Terminal pitch P_1 (mm)	Fixed Hole	Style	For internal use
Film Cap. = **FC**	cylindrical = **C**	600 **2S**	CBB 136 = **DP**	50 **506**	±5% **J**	84,5 **J**	51 **051**	Female M6*10 **0**	45 **4**	with **0**	Style A **A**	
		800 **2K**		75 **756**	±10% **K**	95 **W**	65 **065**	Male M8*20 **3**	38 **8**	without **1**	Style B **B**	
		1000 **3A**		80 **806**			83 **083**				Style C **C**	
		1100 **A3**		110 **117**								
		1200 **3B**		120 **127**								
		1300 **O3**		200 **207**								
				220 **227**								
				280 **287**								

RATINGS

U_R ≤85°C (V_{DC})	C_R (µF)	I_{max} 85°C, 1kHz (A)	70°C, 1kHz (A)	≤60°C, 1kHz (A)	Î (1) (A)	ESR_{typ} 20°C, 1kHz (mΩ)	R_{th} (2) (K/W)	L_S 20°C (nH)	T hotspot max. (°C)	D ±1,0 (mm)	H ±1,0 (mm)	ORDER CODE "#" to be defined, see ordering code table
600 2S	200	39	62	62	2000	1,1	5,9	≤32	105	84,5	51	FCC2SDP107#J051#40#1E3
	260	0	56	72	2193	0,9	5,3	≤32	85	84,5	51	FCC2SDP267#J051#40#1E3
	280	0	46	60	2100	1,4	5,0	≤40	85	84,5	65	FCC2SDP287#J065#40#1E3
	300	39	62	62	2400	1,3	5,2	≤40	105	84,5	65	FCC2SDP307#J065#40#1E3
	350	30	47	47	2500	2,2	5,2	≤30	105	95	83	FCC2SDP357#W083#81C1E3
	380	0	55	71	2135	1,0	5,0	≤40	85	84,5	65	FCC2SDP387#J065#40#1E3
	460	0	52	67	2216	1,2	4,6	≤45	85	84,5	76	FCC2SDP467#J076#40#1E3
	645	0	47	68	4000	0,84	5,2	≤25	85	95	83	FCC2SDP657#W083#81C1E3
700 2Q	150	36	57	57	2100	1,3	5,9	≤32	105	84,5	51	FCC2QDP157#J051#40#1E3
	220	38	60	60	2200	1,4	5,0	≤40	105	84,5	65	FCC2QDP227#J065#40#1E3
	280	38	60	60	2240	1,5	4,6	≤45	105	84,5	76	FCC2QDP287#J076#40#1E3
800 2K	150	0	53	69	2174	1,0	5,3	≤32	85	84,5	51	FCC2KDP157#J051#40#1E3
	220	0	52	67	2123	1,1	5,0	≤40	85	84,5	65	FCC2KDP227#J065#40#1E3
	280	0	50	64	2203	1,3	4,6	≤45	85	84,5	76	FCC2KDP287#J076#40#1E3
900 R2	140	39	62	62	2240	1,1	5,9	≤32	105	84,5	51	FCCR2DP147#J051#40#1E3
	200	38	60	60	2800	1,4	5,0	≤40	105	84,5	65	FCCR2DP207#J065#40#1E3
1000 3A	100	36	57	57	1900	1,3	5,9	≤32	105	84,5	51	FCC3ADP107#J051#40#1E3
	100	0	47	60	1900	1,3	5,3	≤32	85	84,5	65	FCC3ADP107#J065#40#1E3
	140	37	58	58	1820	1,5	5,0	≤40	105	84,5	65	FCC3ADP147#J065#40#1E3
	190	36	57	57	1900	1,7	4,6	≤45	105	84,5	76	FCC3ADP197#J076#40#1E3
1100 A3	80	34	53	53	1600	1,5	5,9	≤32	105	84,5	51	FCCA3DP806#J051#40#1E3
	100	0	46	60	1936	1,3	5,3	≤32	85	84,5	51	FCCA3DP107#J051#40#1E3
	120	34	54	54	1680	1,7	5,0	≤40	105	84,5	65	FCCA3DP127#J065#40#1E3
	140	0	44	58	1805	1,5	5,0	≤40	85	84,5	65	FCCA3DP147#J065#40#1E3
	190	0	43	56	2003	1,7	4,6	≤45	85	84,5	76	FCCA3DP197#J076#40#1E3
1200 3B	70	34	53	53	1680	1,5	5,9	≤32	105	84,5	51	FCC3BDP706#J051#40#1E3
	100	33	53	53	1600	1,8	5,0	≤40	105	84,5	65	FCC3BDP107#J065#40#1E3
	130	34	53	53	1820	1,9	4,6	≤45	105	84,5	76	FCC3BDP137#J076#40#1E3
1300 O3	70	0	45	58	1853	1,4	5,3	≤32	85	84,5	51	FCCO3DP706#J051#40#1E3
	100	0	40	52	1763	1,8	5,0	≤40	85	84,5	65	FCCO3DP107#J065#40#1E3
	130	0	41	53	1874	1,9	4,6	≤45	85	84,5	76	FCCO3DP137#J076#40#1E3
1400 3O	50	34	53	53	1760	1,5	5,9	≤32	105	84,5	51	FCC3ODP506#J051#40#1E3
	75	33	53	53	1763	1,8	5,0	≤40	105	84,5	65	FCC3ODP756#J065#40#1E3
1500 C3	41	31	49	49	1760	1,8	5,9	≤32	105	84,5	51	FCCC3DP416#J051#40#1E3
	70	31	49	49	1700	2,1	5,0	≤40	105	84,5	65	FCCC3DP706#J065#40#1E3

= preferred

(1) Maximum permissible peak current, (2) Thermal resistance from hotspot to ambient (free convection)

DC LINK

FEATURES

- **DC-Link**
- Design for DC Link Application
- Metal sprayed contacts for low ESR
- Self-healing

OVERVIEW

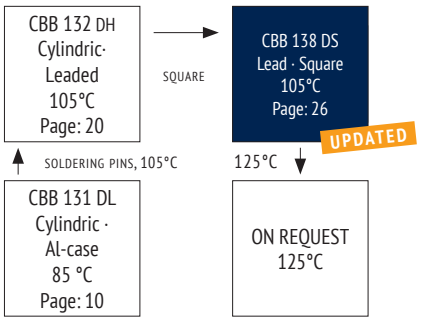

PRODUCT

APPLICATIONS

- Frequency inverter and intermediate circuits
- Industry high-end power supplies

CHARACTERISTICS

ITEM	CHARACTERISTICS
Climatic Category	40/105/56 (IEC 61071)
Operating Temperature	−40 ~ +105°C ($\Theta_{hotspot}$ ⩽ 105°C) $\Theta_{hotspot}$ = 85~105°C: See Voltage Derating Diagram
Storage Temperature	−40 ~ +105°C
Rated Voltage U_{RDC} (70°C)	600 ~ 1 600V_{DC}
Capacitance Range	1 ~ 150µF
Capacitance Tolerance	±10% (K), ±5% (J)
Voltage between Terminals U_{TT}	1,5 * U_{RDC} (20°C, 10s)
Voltage between Terminals & Case U_{TC}	⩾ 3 000V_{AC} (20°C, 50Hz, 10s)
Dielectric Dissipation Factor tan δ_o	⩽ 2 * 10^{-4} (20°C, 1kHz)
Insulator Resistance R_i*C	⩾ 10 000MΩ * µF (20°C, 100V_{DC}, 1min)
Max. Overvoltage	Please see IEC 61071
Life Time Expectancy	⩾ 100.000h, failure rate ⩽ 50 FIT (70°C)
Reference Standard	IEC 61071:2007

ENVIRONMENTAL

The products are RoHS, WEEE and REACh compliant.

The detailed version please see seperate "Environmental Certificates" document or www.jianghai-europe.com

APPROVALS

UL94-V0:

Plastic & Compound Mass

UL810:

CZDS2.E227010 (Construction)

LIFETIME

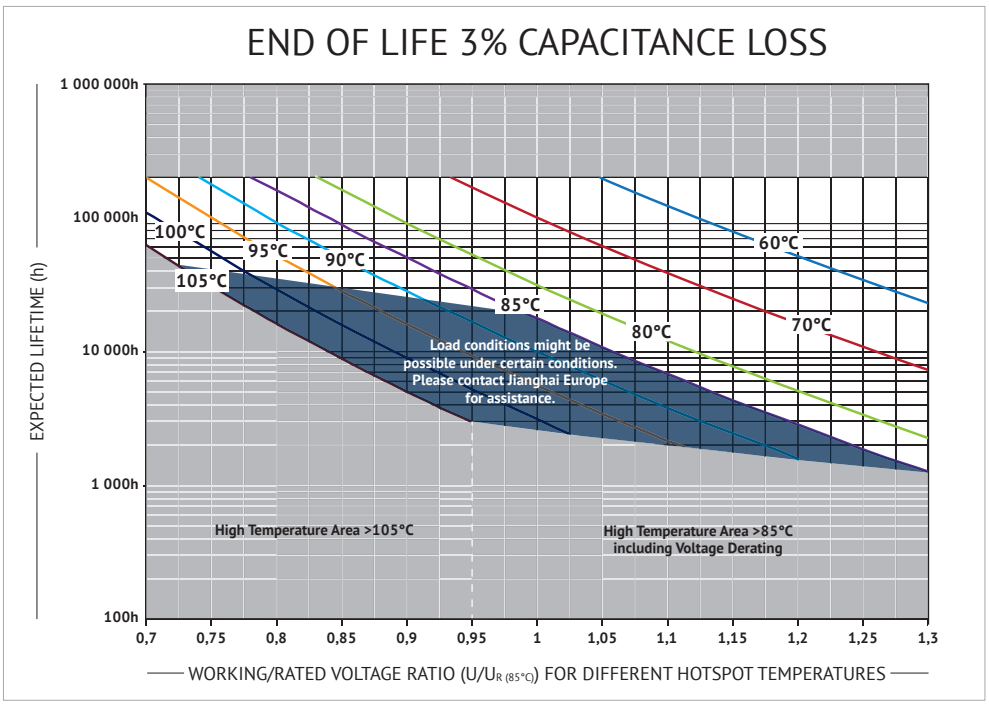

CURRENT DERATING

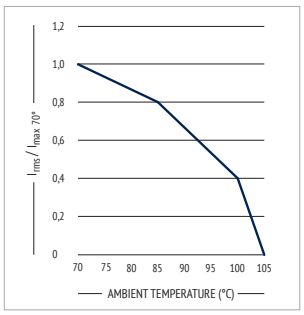

VOLTAGE DERATING

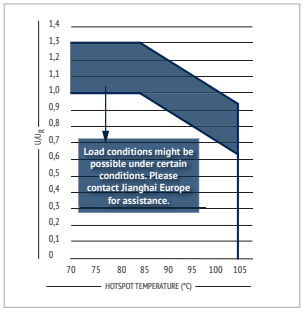

DIMENSIONS

4 PIN TYPE

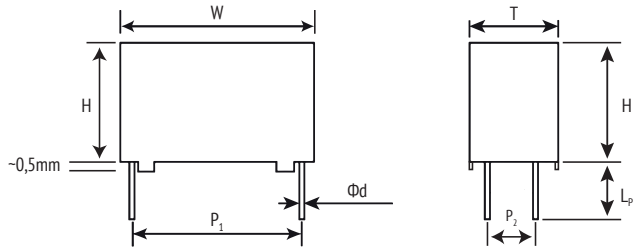

2 PIN TYPE

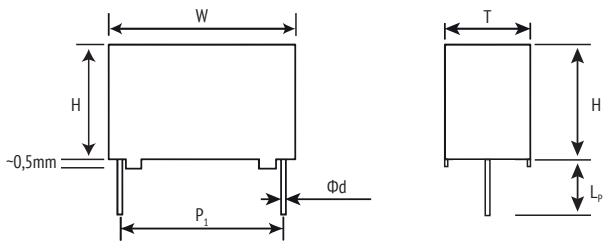

Lp = 5,0 ±1mm · other styles on request

INTERNAL CONSTRUCTION (EXAMPLE)

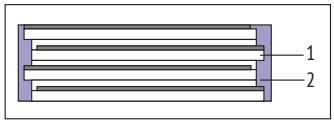

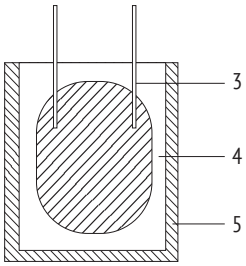

NO.	ITEM	MATERIAL
1	Single-sided Metallized Film	PP + Al, Zn
2	Metal Sprayed Contact	Zn + Sn/Zn
3	Terminals	Sn-coated Cu
4	Potting Compound	Epoxy
5	Case	Flame retardant PBT

MARKING

CBB 138

50µF J 800V

G02F12

BRAND

PRODUCT SERIES

CAPACITANCE, TOLERANCE AND RATED VOLTAGE

DATE CODE

HUMIDITY IMPROVEMENT

Capacitors in THB design are available on request.

ORDER CODE

FC	S	3B	DS	105	K	0	50	FK	9	0	C	E 3
Capacitor type	Product shape	DC rated voltage code (V)	Series code	Capacitance Code (µF)	Capacitance tolerance	Pin Style (mm)	Pin Length (mm)	Dimension Code WxHxT (mm)	Pitch P_1 (mm)	Pitch P_2 (mm)	Leadwire Diameter Ød	For internal use
Film Cap. = FC	Square = S	500 **2H**	CBB 138 = DS	0,68 **684**	±5% **J**	2 Pin, straight leads cut **0**	Long Leads **00**	32 x 18 x 9 **I1**	27,5 **9**	10,2 **3**	0,8 **B**	
		600 **2S**		0,82 **824**	±10% **K**	2 Pin, long leads **1**	3,0 **30**	32 x 20 x 11 **I4**	37,5 **C**	12,7 **4**	1,0 **C**	
		700 **2Q**		1,0 **105**		4 Pin, straight leads cut **2**	3,2 **32**	32 x 22 x 13 **I7**	52,5 **F**	20,3 **9**	1,2 **D**	
		800 **2K**		1,2 **125**			3,5 **35**	32 x 24,5 x 15 **IJ**		- **0**		
		900 **R2**		2,0 **205**			5,0 **50**	32 x 28 x 14 **IC**				
		1000 **3A**		5,0 **505**			6,0 **60**	32 x 28 x 18 **ID**				
		1100 **A3**		10 **106**			13,0 **A0**	32 x 33 x 18 **IF**				
		1200 **3B**		20 **206**			15 **A1**	32 x 37 x 22 **II**				
		1500 **C3**					17,5 **A2**	42 x 42 x 28 **FH**				
								42 x 50 x 35 **FK**				
								42,5 x 18 x 24 **FL**				
								42,5 x 32 x 19 **F5**				
								42,5 x 34 x 20 **WY**				
								42,5 x 37 x 22 **FQ**				
								42,5 x 37 x 28 **F1**				
								42,5 x 40 x 20 **F2**				
								42,5 x 44 x 24 **F9**				
								42,5 x 45 x 30 **FF**				
								42,5 x 50 x 35 **FK**				
								57,5 x 45 x 30 **HH**				
								57,5 x 50 x 35 **HL**				
								57,5 x 55 x 45 **HS**				
								57,5 x 60 x 35 **H6**				
								57,5 x 60 x 45 **H2**				
								57,5 x 65 x 35 **KA**				
								57,5 x 65 x 45 **H7**				
								57,5 x 70 x 35 **H8**				

DC LINK

U_R (VDC)	C_R (µF)	I_{max} ≤85°C, 10kHz (A)	I_{max} ≤70°C 10kHz (A)	Î (1) (A)	ESR_{typ} 70°C 10kHz (mΩ)	R_{th}(2) (K/W)	dV/dt 20°C (V/µs)	Ls_{typ} 25°C 1MHz (nH)	W +1/-1,5 (mm)	H +1/-1,5 (mm)	T +1/-1,5 (mm)	P_1 ±0,5 (mm)	P_2 ±0,5 (mm)	Ød ±0,05 (mm)	ORDER CODE ◊ = Tolerance Δ = Pin Style ## = Pin Length
500 (≤85°C) 2H	3	3,1	4,1	195	26,5	44	65	25	32	20	11	27,5	\	0,8	FCS2HDS305◊Δ##I490BE3
	5	3,8	5,0	325	20,2	40	65	25	32	22	13	27,5	\	0,8	FCS2HDS505◊Δ##I790BE3
	8	5,2	6,8	520	13,0	33	65	25	32	28	14	27,5	\	0,8	FCS2HDS805◊Δ##IC90BE3
600 (≤70°C)	10	7,0	9,3	650	8,6	27	65	25	32	33	18	27,5	\	0,8	FCS2HDS106◊Δ##IF90BE3
	15	9,1	11,9	975	6,1	23	65	25	32	37	22	27,5	\	0,8	FCS2HDS156◊Δ##II90BE3
		9,4	12,4	975	5,6	23	65	25	32	37	22	27,5	10,2	0,8	FCS2HDS156◊Δ##II93BE3
	20	9,3	12,2	600	6,7	20	30	30	42,5	40	20	37,5	10,2	1	FCS2HDS206◊Δ##F2C3CE3
	22	9,7	12,8	660	6,1	20	30	30	42,5	40	20	37,5	10,2	1	FCS2HDS226◊Δ##F2C3CE3
	25	9,6	12,6	750	6,3	20	30	30	42,5	40	20	37,5	10,2	1	FCS2HDS256◊Δ##F2C3CE3
	30	12,1	16,0	900	4,6	17	30	30	42,5	44	24	37,5	10,2	1	FCS2HDS306◊Δ##F9C3CE3
	35	14,1	18,5	1050	3,9	15	30	30	42,5	45	30	37,5	20,3	1,2	FCS2HDS356◊Δ##FFC9DE3
	40	15,0	19,7	1200	3,4	15	30	30	42,5	45	30	37,5	20,3	1,2	FCS2HDS406◊Δ##FFC9DE3
	50	17,7	23,3	1500	2,8	13	30	30	42,5	50	35	37,5	20,3	1,2	FCS2HDS506◊Δ##FKC9DE3
	60	14,3	18,9	900	4,7	12	15	35	57,5	45	30	52,5	20,3	1,2	FCS2HDS606◊Δ##HHF9DE3
	75	17,4	22,9	1125	3,8	10	15	35	57,5	50	35	52,5	20,3	1,2	FCS2HDS756◊Δ##HLF9DE3
	100	22,1	29,1	1500	2,9	8	15	35	57,5	55	45	52,5	20,3	1,2	FCS2HDS107◊Δ##HSF9DE3
	110	26,5	34,9	1650	2,7	6	15	35	57,5	60	45	52,5	20,3	1,2	FCS2HDS117◊Δ##H2F9DE3
	130	24,7	32,5	1950	2,7	7	15	35	57,5	60	35	52,5	20,3	1,2	FCS2HDS137◊Δ##H6F9DE3
	140	27,4	36,1	2100	2,6	6	15	35	57,5	65	35	52,5	20,3	1,2	FCS2HDS147◊Δ##KAF9DE3
	150	28,1	37,0	2250	2,4	6	15	35	57,5	70	35	52,5	20,3	1,2	FCS2HDS157◊Δ##H8F9DE3
600 (≤85°C) 2S	3	3,1	4,1	195	26,5	44	65	25	32	20	11	27,5	\	0,8	FCS2SDS305◊Δ##I490BE3
	4	3,6	4,8	260	20,1	44	65	25	32	20	11	27,5	\	0,8	FCS2SDS405◊Δ##I490BE3
	5	4,6	6,1	325	16,3	33	65	25	32	28	14	27,5	\	0,8	FCS2SDS505◊Δ##IC90BE3
700 (≤70°C)	8	5,4	7,1	520	12,1	33	65	25	32	28	14	27,5	\	0,8	FCS2SDS805◊Δ##IC90BE3
	10	7,0	9,3	650	8,6	27	65	25	32	33	18	27,5	\	0,8	FCS2SDS106◊Δ##IF90BE3
	12	7,1	9,4	780	8,4	27	65	25	32	33	18	27,5	\	0,8	FCS2SDS126◊Δ##IF90BE3
		6,1	8,1	360	12,8	24	30	30	42,5	18	24	37,5	\	1	FCS2SDS126◊Δ##FLC0CE3
	15	9,1	11,9	975	6,1	23	65	25	32	37	22	27,5	\	0,8	FCS2SDS156◊Δ##II90BE3
		6,6	8,7	975	11,0	24	65	30	42,5	18	24	37,5	\	1	FCS2SDS156◊Δ##FLC0CE3
	20	9,3	12,2	600	6,7	20	30	30	42,5	40	20	37,5	10,2	1	FCS2SDS206◊Δ##F2C3CE3
	30	11,9	15,6	900	4,6	18	30	30	42,5	37	28	37,5	10,2	1	FCS2SDS306◊Δ##F1C3CE3
	35	12,1	16,0	1050	4,6	17	30	30	42,5	44	24	37,5	10,2	1	FCS2SDS356◊Δ##F9C3CE3
	40	15,0	19,7	1200	3,4	15	30	30	42,5	45	30	37,5	20,3	1,2	FCS2SDS406◊Δ##FFC9DE3
	50	16,9	22,2	750	4,0	10	15	35	57,5	50	35	52,5	20,3	1,2	FCS2SDS506◊Δ##HLF9DE3
	60	18,4	24,2	900	3,4	10	15	35	57,5	50	35	52,5	20,3	1,2	FCS2SDS606◊Δ##HLF9DE3
	70	19,7	26,0	1050	3,0	10	15	35	57,5	50	35	52,5	20,3	1,2	FCS2SDS706◊Δ##HLF9DE3
	80	23,3	30,7	1200	2,6	8	15	35	57,5	55	45	52,5	20,3	1,2	FCS2SDS806◊Δ##HSF9DE3
	90	24,6	32,4	1350	2,4	8	15	35	57,5	55	45	52,5	20,3	1,2	FCS2SDS906◊Δ##HSF9DE3
	100	29,5	38,9	1500	2,2	6	15	35	57,5	60	45	52,5	20,3	1,2	FCS2SDS107◊Δ##H2F9DE3
	110	30,8	40,5	1650	2,0	6	15	35	57,5	60	45	52,5	20,3	1,2	FCS2SDS117◊Δ##H2F9DE3
	120	27,6	36,4	1800	2,2	7	15	35	57,5	60	35	52,5	20,3	1,2	FCS2SDS127◊Δ##H6F9DE3
	130	28,5	37,5	1950	2,0	7	15	35	57,5	65	35	52,5	20,3	1,2	FCS2SDS137◊Δ##KAF9DE3
	140	29,4	38,6	2100	1,9	7	15	35	57,5	65	45	52,5	20,3	1,2	FCS2SDS147◊Δ##H7F9DE3
		31,5	41,4	2100	1,9	6	15	35	57,5	70	35	52,5	20,3	1,2	FCS2SDS147◊Δ##H8F9DE3
700 (≤85°C) 2Q	1	2,0	2,6	65	62,3	46	65	25	32	18	9	27,5	\	0,8	FCS2QDS105◊Δ##I190BE3
	2	2,5	3,3	130	39,5	46	65	25	32	18	9	27,5	\	0,8	FCS2QDS205◊Δ##I190BE3
	3	3,1	4,1	195	26,5	44	65	25	32	20	11	27,5	\	0,8	FCS2QDS305◊Δ##I490BE3
800 (≤70°C)	3,3	4,2	5,6	215	19,5	33	65	25	32	28	14	27,5	\	0,8	FCS2QDS335◊Δ##IC90BE3
	5	4,9	6,4	325	14,7	33	65	25	32	28	14	27,5	\	0,8	FCS2QDS505◊Δ##IC90BE3
	6	5,7	7,5	390	12,4	29	65	25	32	28	18	27,5	\	0,8	FCS2QDS605◊Δ##ID90BE3
	8	6,7	8,8	520	9,6	27	65	25	32	33	18	27,5	\	0,8	FCS2QDS805◊Δ##IF90BE3
	10	7,0	9,3	650	8,6	27	65	25	32	33	18	27,5	\	0,8	FCS2QDS106◊Δ##IF90BE3
		8,0	10,5	650	7,9	23	65	25	32	37	22	27,5	\	0,8	FCS2QDS106◊Δ##II90BE3
		6,1	8,0	300	13,1	24	30	30	42,5	18	24	37,5	\	1	FCS2QDS106◊Δ##FLC0CE3
	12	8,6	11,4	780	6,7	23	65	25	32	37	22	27,5	\	0,8	FCS2QDS126◊Δ##II90BE3
		6,6	8,7	360	11,0	24	30	30	42,5	18	24	37,5	\	1	FCS2QDS126◊Δ##FLC0CE3
	15	8,5	11,2	450	8,0	20	30	30	42,5	40	20	37,5	10,2	1	FCS2QDS156◊Δ##F2C3CE3
	20	10,9	14,4	600	5,4	18	30	30	42,5	37	28	37,5	10,2	1	FCS2QDS206◊Δ##F1C3CE3
	22	11,1	14,6	660	5,6	17	30	30	42,5	44	24	37,5	10,2	1	FCS2QDS226◊Δ##F9C3CE3
	25	11,8	15,5	750	4,9	17	30	30	42,5	44	24	37,5	10,2	1	FCS2QDS256◊Δ##F9C3CE3
	30	13,8	18,1	900	4,1	15	30	30	42,5	45	30	37,5	20,3	1,2	FCS2QDS306◊Δ##FFC9DE3
	35	16,8	22,1	1050	3,2	13	30	30	42,5	50	35	37,5	20,3	1,2	FCS2QDS356◊Δ##FKC9DE3
	40	14,7	19,3	600	4,5	12	15	35	57,5	45	30	52,5	20,3	1,2	FCS2QDS406◊Δ##HHF9DE3
	45	15,5	20,4	675	4,0	12	15	35	57,5	45	30	52,5	20,3	1,2	FCS2QDS456◊Δ##HHF9DE3
	50	18,8	24,7	750	3,3	10	15	35	57,5	50	35	52,5	20,3	1,2	FCS2QDS506◊Δ##HLF9DE3
	55	18,6	24,4	825	3,4	10	15	35	57,5	50	35	52,5	20,3	1,2	FCS2QDS556◊Δ##HLF9DE3
	60	19,3	25,5	900	3,1	10	15	35	57,5	50	35	52,5	20,3	1,2	FCS2QDS606◊Δ##HLF9DE3

(1) Maximum permissible peak current, (2) Thermal resistance from hotspot to ambient (free convection)

U_R (VDC)	C_R (µF)	I_{max} ≤85°C, 10kHz (A)	I_{max} ≤70°C 10kHz (A)	Î (1) (A)	ESR_{typ} 70°C 10kHz (mΩ)	R_{th} (2) (K/W)	dV/dt 20°C (V/µs)	Ls_{typ} 25°C 1MHz (nH)	W +1/-1,5 (mm)	H +1/-1,5 (mm)	T +1/-1,5 (mm)	P_1 ±0,5 (mm)	P_2 ±0,5 (mm)	Ød ±0,05 (mm)	ORDER CODE ◊ = Tolerance Δ = Pin Style ## = Pin Length
700 (≤85°C) 2Q	65	23,6	31,1	975	2,6	8	15	35	57,5	55	45	52,5	20,3	1,2	FCS2QDS656◊Δ##HSF9DE3
	70	24,4	32,1	1050	2,4	8	15	35	57,5	55	45	52,5	20,3	1,2	FCS2QDS706◊Δ##HSF9DE3
	75	23,8	31,4	1125	2,5	8	15	35	57,5	55	45	52,5	20,3	1,2	FCS2QDS756◊Δ##HSF9DE3
800 (≤70°C)	80	29,7	39,1	1200	2,2	6	15	35	57,5	60	45	52,5	20,3	1,2	FCS2QDS806◊Δ##H2F9DE3
		26,0	34,2	1200	2,4	7	15	35	57,5	60	35	52,5	20,3	1,2	FCS2QDS806◊Δ##H6F9DE3
	90	29,6	39,0	1350	2,2	6	15	35	57,5	60	45	52,5	20,3	1,2	FCS2QDS906◊Δ##H2F9DE3
		26,2	34,4	1350	2,4	7	15	35	57,5	60	35	52,5	20,3	1,2	FCS2QDS906◊Δ##H6F9DE3
	100	31,0	40,8	1500	2,0	6	15	35	57,5	60	45	52,5	20,3	1,2	FCS2QDS107◊Δ##H2F9DE3
		27,2	35,8	1500	2,2	7	15	35	57,5	65	35	52,5	20,3	1,2	FCS2QDS107◊Δ##KAF9DE3
	110	30,5	40,1	1650	2,1	6	15	35	57,5	70	35	52,5	20,3	1,2	FCS2QDS117◊Δ##H8F9DE3
	120	29,5	38,8	1800	1,9	7	15	35	57,5	65	45	52,5	20,3	1,2	FCS2QDS127◊Δ##H7F9DE3
	130	30,4	40,0	1950	1,8	7	15	35	57,5	65	45	52,5	20,3	1,2	FCS2QDS137◊Δ##H7F9DE3
800 (≤85°C) 2K	1	1,9	2,5	65	70,3	46	65	25	32	18	9	27,5	\	0,8	FCS2KDS105◊Δ##I190BE3
	2	2,7	3,6	130	35,5	44	65	25	32	20	11	27,5	\	0,8	FCS2KDS205◊Δ##I490BE3
	3	3,5	4,6	195	23,9	40	65	25	32	22	13	27,5	\	0,8	FCS2KDS305◊Δ##I790BE3
1000 (≤70°C)	3,3	4,0	5,3	215	21,9	33	65	25	32	28	14	27,5	\	0,8	FCS2KDS335◊Δ##IC90BE3
	5	4,9	6,4	325	14,7	33	65	25	32	28	14	27,5	\	0,8	FCS2KDS505◊Δ##IC90BE3
	6	5,7	7,5	390	12,4	29	65	25	32	28	18	27,5	\	0,8	FCS2KDS605◊Δ##ID90BE3
	8	6,7	8,8	520	9,6	27	65	25	32	33	18	27,5	\	0,8	FCS2KDS805◊Δ##IF90BE3
	9	7,1	9,3	585	8,6	27	65	25	32	33	18	27,5	\	0,8	FCS2KDS905◊Δ##IF90BE3
	10	8,0	10,5	650	7,9	23	65	25	32	37	22	27,5	\	0,8	FCS2KDS106◊Δ##II90BE3
		6,2	8,2	300	12,0	25	30	30	42,5	32	19	37,5	\	1	FCS2KDS106◊Δ##F5C0CE3
	15	8,5	11,2	450	8,0	20	30	30	42,5	40	20	37,5	10,2	1	FCS2KDS156◊Δ##F2C3CE3
	20	10,3	13,6	600	6,0	18	30	30	42,5	37	28	37,5	10,2	1	FCS2KDS206◊Δ##F1C3CE3
		10,6	13,9	600	6,1	17	30	30	42,5	44	24	37,5	10,2	1	FCS2KDS206◊Δ##F9C3CE3
	22	11,1	14,6	660	5,6	17	30	30	42,5	44	24	37,5	10,2	1	FCS2KDS226◊Δ##F9C3CE3
	25	12,6	16,6	750	4,8	15	30	30	42,5	45	30	37,5	20,3	1,2	FCS2KDS256◊Δ##FFC9DE3
	30	13,8	18,1	900	4,1	15	30	30	42,5	45	30	37,5	20,3	1,2	FCS2KDS306◊Δ##FFC9DE3
	35	13,8	18,1	525	5,1	12	15	35	57,5	45	30	52,5	20,3	1,2	FCS2KDS356◊Δ##HHF9DE3
	40	14,7	19,3	600	4,5	12	15	35	57,5	45	30	52,5	20,3	1,2	FCS2KDS406◊Δ##HHF9DE3
	45	15,5	20,4	675	4,0	12	15	35	57,5	45	30	52,5	20,3	1,2	FCS2KDS456◊Δ##HHF9DE3
	47	18,3	24,0	705	3,5	10	15	35	57,5	50	35	52,5	20,3	1,2	FCS2KDS476◊Δ##HLF9DE3
	50	17,8	23,4	750	3,7	10	15	35	57,5	50	35	52,5	20,3	1,2	FCS2KDS506◊Δ##HLF9DE3
	55	18,6	24,4	825	3,4	10	15	35	57,5	50	35	52,5	20,3	1,2	FCS2KDS556◊Δ##HLF9DE3
	65	23,8	31,3	975	2,9	7	15	35	57,5	60	35	52,5	20,3	1,2	FCS2KDS656◊Δ##H6F9DE3
		23,6	31,1	975	2,6	8	15	35	57,5	55	45	52,5	20,3	1,2	FCS2KDS656◊Δ##HSF9DE3
	70	23,1	30,4	1050	2,7	8	15	35	57,5	55	45	52,5	20,3	1,2	FCS2KDS706◊Δ##HSF9DE3
		24,6	32,3	1050	2,7	7	15	35	57,5	60	35	52,5	20,3	1,2	FCS2KDS706◊Δ##H6F9DE3
	75	23,8	31,4	1125	2,5	8	15	35	57,5	55	45	52,5	20,3	1,2	FCS2KDS756◊Δ##HSF9DE3
		25,3	33,2	1125	2,6	7	15	35	57,5	65	35	52,5	20,3	1,2	FCS2KDS756◊Δ##KAF9DE3
	80	28,1	37,0	1200	2,4	6	15	35	57,5	60	45	52,5	20,3	1,2	FCS2KDS806◊Δ##H2F9DE3
		27,9	36,7	1200	2,5	6	15	35	57,5	70	35	52,5	20,3	1,2	FCS2KDS806◊Δ##H8F9DE3
	90	29,6	39,0	1350	2,2	6	15	35	57,5	60	45	52,5	20,3	1,2	FCS2KDS906◊Δ##H2F9DE3
	100	28,6	37,6	1500	2,0	7	15	35	57,5	65	45	52,5	20,3	1,2	FCS2KDS107◊Δ##H7F9DE3
900 (≤85°C) R2	1	2,1	2,7	70	59,3	46	70	25	32	18	9	27,5	\	0,8	FCSR2DS105◊Δ##I190BE3
	2	3,0	3,9	140	30,0	44	70	25	32	20	11	27,5	\	0,8	FCSR2DS205◊Δ##I490BE3
	3	3,8	5,0	210	20,2	40	70	25	32	22	13	27,5	\	0,8	FCSR2DS305◊Δ##I790BE3
1100 (≤70°C)	3,3	4,2	5,6	231	18,5	35	70	25	32	24,5	15	27,5	\	0,8	FCSR2DS335◊Δ##IJ90BE3
	5	5,6	7,4	350	12,5	29	70	25	32	28	18	27,5	\	0,8	FCSR2DS505◊Δ##ID90BE3
	6	6,3	8,3	420	10,6	27	70	25	32	33	18	27,5	\	0,8	FCSR2DS605◊Δ##IF90BE3
	8	7,8	10,3	560	8,3	23	70	25	32	37	22	27,5	\	0,8	FCSR2DS805◊Δ##II90BE3
	10	8,6	11,3	700	6,8	23	70	25	32	37	22	27,5	\	0,8	FCSR2DS106◊Δ##II90BE3
		7,4	9,8	350	10,4	20	35	30	42,5	40	20	37,5	\	1	FCSR2DS106◊Δ##F2C0CE3
		7,6	9,9	350	10,1	20	35	30	42,5	40	20	37,5	10,2	1	FCSR2DS106◊Δ##F2C3CE3
	15	9,7	12,8	525	7,2	17	35	30	42,5	44	24	37,5	\	1	FCSR2DS156◊Δ##F9C0CE3
	18	10,5	13,8	630	6,1	17	35	30	42,5	44	24	37,5	\	1	FCSR2DS186◊Δ##F9C0CE3
		10,8	14,2	630	5,8	17	35	30	42,5	44	24	37,5	10,2	1	FCSR2DS186◊Δ##F9C3CE3
	20	11,7	15,4	700	5,6	15	35	30	42,5	45	30	37,5	\	1	FCSR2DS206◊Δ##FFC0CE3
		12,2	16,1	700	5,1	15	35	30	42,5	45	30	37,5	20,3	1,2	FCSR2DS206◊Δ##FFC9DE3
	25	13,6	17,9	875	4,2	15	35	30	42,5	45	30	37,5	20,3	1,2	FCSR2DS256◊Δ##FFC9DE3
	30	15,9	20,9	1050	3,5	13	35	30	42,5	50	35	37,5	20,3	1,2	FCSR2DS306◊Δ##FKC9DE3
		11,6	15,3	450	7,1	12	15	35	57,5	45	30	52,5	20,3	1,2	FCSR2DS306◊Δ##HHF9DE3
	35	13,7	18,0	525	6,2	10	15	35	57,5	50	35	52,5	20,3	1,2	FCSR2DS356◊Δ##HLF9DE3
	40	14,6	19,2	600	5,4	10	15	35	57,5	50	35	52,5	20,3	1,2	FCSR2DS406◊Δ##HLF9DE3
	50	16,2	21,3	750	4,4	10	15	35	57,5	50	35	52,5	20,3	1,2	FCSR2DS506◊Δ##HLF9DE3
	55	20,5	27,0	825	3,9	7	15	35	57,5	60	35	52,5	20,3	1,2	FCSR2DS556◊Δ##H6F9DE3
		18,9	24,9	825	4,0	8	15	35	57,5	55	45	52,5	20,3	1,2	FCSR2DS556◊Δ##HSF9DE3

(1) Maximum permissible peak current, (2) Thermal resistance from hotspot to ambient (free convection)

>>

DC LINK

U_R (VDC)	C_R (µF)	I_{max} ≤85°C, 10kHz (A)	I_{max} ≤70°C 10kHz (A)	Î (1) (A)	ESR_{typ} 70°C 10kHz (mΩ)	R_{th} (2) (K/W)	dV/dt 20°C (V/µs)	Ls_{typ} 25°C 1MHz (nH)	W +1/-1,5 (mm)	H +1/-1,5 (mm)	T +1/-1,5 (mm)	P_1 ±0,5 (mm)	P_2 ±0,5 (mm)	Ød ±0,05 (mm)	ORDER CODE ◊ = Tolerance Δ = Pin Style ## = Pin Length
900 (≤85°C) R2	60	20,1	26,4	900	3,6	8	15	35	57,5	55	45	52,5	20,3	1,2	FCSR2DS606◊Δ##HSF9DE3
		20,9	27,5	900	3,8	7	15	35	57,5	65	35	52,5	20,3	1,2	FCSR2DS606◊Δ##KAF9DE3
	65	23,8	31,3	975	3,4	6	15	35	57,5	70	35	52,5	20,3	1,2	FCSR2DS656◊Δ##H8F9DE3
1100 (≤70°C)	70	24,8	32,6	1050	3,1	6	15	35	57,5	60	45	52,5	20,3	1,2	FCSR2DS706◊Δ##H2F9DE3
	80	24,3	31,9	1200	2,8	7	15	35	57,5	65	45	52,5	20,3	1,2	FCSR2DS806◊Δ##H7F9DE3
1000 (≤85°C) 3A	1	2,2	2,9	75	53,3	44	75	25	32	20	11	27,5	\	0,8	FCS3ADS105◊Δ##I490BE3
	2	3,3	4,3	150	27,0	40	75	25	32	22	13	27,5	\	0,8	FCS3ADS205◊Δ##I790BE3
	3	4,2	5,5	225	18,3	36	75	25	32	24,5	15	27,5	\	0,8	FCS3ADS305◊Δ##IJ90BE3
1200 (≤70°C)	5	6,1	8,1	375	11,4	27	75	25	32	33	18	27,5	\	0,8	FCS3ADS505◊Δ##IF90BE3
	8	8,2	10,8	600	7,5	23	75	25	32	37	22	27,5	\	0,8	FCS3ADS805◊Δ##II90BE3
	10	7,8	10,3	370	9,4	20	37	30	42,5	40	20	37,5	\	1	FCS3ADS106◊Δ##F2C0CE3
		8,0	10,5	370	9,1	20	37	30	42,5	40	20	37,5	10,2	1	FCS3ADS106◊Δ##F2C3CE3
	12	9,4	12,4	444	7,7	17	37	30	42,5	44	24	37,5	10,2	1	FCS3ADS126◊Δ##F9C3CE3
	15	10,2	13,4	555	6,5	17	37	30	42,5	44	24	37,5	\	1	FCS3ADS156◊Δ##F9C0CE3
		10,5	13,8	555	6,2	17	37	30	42,5	44	24	37,5	10,2	1	FCS3ADS156◊Δ##F9C3CE3
		11,2	14,8	555	6,1	15	37	30	42,5	45	30	37,5	20,3	1,2	FCS3ADS156◊Δ##FFC9DE3
	20	12,9	17,0	740	4,6	15	37	30	42,5	45	30	37,5	20,3	1,2	FCS3ADS206◊Δ##FFC9DE3
	25	15,3	20,2	925	3,8	13	37	30	42,5	50	35	37,5	20,3	1,2	FCS3ADS256◊Δ##FKC9DE3
	30	12,2	16,1	510	6,4	12	17	35	57,5	45	30	52,5	20,3	1,2	FCS3ADS306◊Δ##HHF9DE3
	35	14,4	18,9	595	5,6	10	17	35	57,5	50	35	52,5	20,3	1,2	FCS3ADS356◊Δ##HLF9DE3
	40	15,4	20,2	680	4,9	10	17	35	57,5	50	35	52,5	20,3	1,2	FCS3ADS406◊Δ##HLF9DE3
		18,3	24,0	680	4,9	7	17	35	57,5	60	35	52,5	20,3	1,2	FCS3ADS406◊Δ##H6F9DE3
	50	19,0	25,0	850	4,0	8	17	35	57,5	55	45	52,5	20,3	1,2	FCS3ADS506◊Δ##HSF9DE3
		20,2	26,6	850	4,0	7	17	35	57,5	65	35	52,5	20,3	1,2	FCS3ADS506◊Δ##KAF9DE3
	55	22,7	29,9	935	3,7	6	17	35	57,5	70	35	52,5	20,3	1,2	FCS3ADS556◊Δ##H8F9DE3
	60	23,8	31,3	1020	3,4	6	17	35	57,5	60	45	52,5	20,3	1,2	FCS3ADS606◊Δ##H2F9DE3
		21,9	28,9	1020	3,4	7	17	35	57,5	65	45	52,5	20,3	1,2	FCS3ADS606◊Δ##H7F9DE3
1100 (≤85°C) A3	1	2,3	3,1	80	48,4	44	80	25	32	20	11	27,5	\	0,8	FCSA3DS105◊Δ##I490BE3
	1,5	3,0	3,9	120	32,5	40	80	25	32	22	13	27,5	\	0,8	FCSA3DS155◊Δ##I790BE3
	2	3,6	4,8	160	24,6	36	80	25	32	24,5	15	27,5	\	0,8	FCSA3DS205◊Δ##IJ90BE3
1300 (≤70°C)	2,2	3,9	5,2	176	22,5	33	80	25	32	28	14	27,5	\	0,8	FCSA3DS225◊Δ##IC90BE3
	3,3	5,1	6,7	264	15,2	29	80	25	32	28	18	27,5	\	0,8	FCSA3DS335◊Δ##ID90BE3
	4	5,8	7,6	320	12,8	27	80	25	32	33	18	27,5	\	0,8	FCSA3DS405◊Δ##IF90BE3
	5	6,9	9,1	400	10,5	23	80	25	32	37	22	27,5	\	0,8	FCSA3DS505◊Δ##II90BE3
	6,8	6,5	8,6	272	12,3	22	40	30	42,5	34	20	37,5	10,2	1	FCSA3DS685◊Δ##WYC3CE3
	8	7,4	9,7	320	10,6	20	40	30	42,5	40	20	37,5	\	1	FCSA3DS805◊Δ##F2C0CE3
		7,5	9,9	320	10,3	20	40	30	42,5	40	20	37,5	10,2	1	FCSA3DS805◊Δ##F2C3CE3
		7,5	9,9	320	10,3	20	40	30	42,5	37	22	37,5	10,2	1	FCSA3DS805◊Δ##FQC3CE3
	9	7,9	10,5	360	9,2	20	40	30	42,5	37	22	37,5	10,2	1	FCSA3DS905◊Δ##FQC3CE3
	10	9,2	12,1	400	8,0	17	40	30	42,5	44	24	37,5	\	1	FCSA3DS106◊Δ##F9C0CE3
		9,4	12,4	400	7,6	17	40	30	42,5	44	24	37,5	10,2	1	FCSA3DS106◊Δ##F9C3CE3
	12	11,0	14,5	480	6,3	15	40	30	42,5	45	30	37,5	20,3	1,2	FCSA3DS126◊Δ##FFC9DE3
	15	12,0	15,8	600	5,4	15	40	30	42,5	45	30	37,5	20,3	1,2	FCSA3DS156◊Δ##FFC9DE3
	18	14,0	18,4	720	4,5	13	40	30	42,5	50	35	37,5	20,3	1,2	FCSA3DS186◊Δ##FKC9DE3
	20	14,7	19,4	400	4,1	13	20	30	42,5	50	35	37,5	20,3	1,2	FCSA3DS206◊Δ##FKC9DE3
		11,0	14,5	400	7,9	12	20	35	57,5	45	30	52,5	20,3	1,2	FCSA3DS206◊Δ##HHF9DE3
	25	13,4	17,6	500	6,4	10	20	35	57,5	50	35	52,5	20,3	1,2	FCSA3DS256◊Δ##HLF9DE3
	30	14,0	18,5	600	5,9	10	20	35	57,5	50	35	52,5	20,3	1,2	FCSA3DS306◊Δ##HLF9DE3
	35	18,0	23,6	700	5,1	7	20	35	57,5	60	35	52,5	20,3	1,2	FCSA3DS356◊Δ##H6F9DE3
	40	19,1	25,1	800	4,5	7	20	35	57,5	65	35	52,5	20,3	1,2	FCSA3DS406◊Δ##KAF9DE3
		18,2	24,0	800	4,3	8	20	35	57,5	55	45	52,5	20,3	1,2	FCSA3DS406◊Δ##HSF9DE3
	45	22,1	29,0	900	4,0	6	20	35	57,5	70	35	52,5	20,3	1,2	FCSA3DS456◊Δ##H8F9DE3
	50	21,5	28,3	1000	3,6	7	20	35	57,5	65	45	52,5	20,3	1,2	FCSA3DS506◊Δ##H7F9DE3
1200 (≤85°C) 3B	1	2,4	3,2	90	44,3	44	90	25	32	20	11	27,5	\	0,8	FCS3BDS105◊Δ##I490BE3
	2	4,0	5,3	180	23,7	30	90	25	32	24,5	15	27,5	\	0,8	FCS3BDS205◊Δ##IJ90BE3
	2,2	4,4	5,8	198	20,6	29	90	25	32	28	18	27,5	\	0,8	FCS3BDS225◊Δ##ID90BE3
1400 (≤70°C)	3	5,1	6,7	270	15,3	29	90	25	32	28	18	27,5	\	0,8	FCS3BDS305◊Δ##ID90BE3
	3,3	5,5	7,3	297	14,1	27	90	25	32	33	18	27,5	\	0,8	FCS3BDS335◊Δ##IF90BE3
	5	7,2	9,5	450	9,7	23	90	25	32	37	22	27,5	\	0,8	FCS3BDS505◊Δ##II90BE3
	6	6,7	8,8	270	12,8	20	45	30	42,5	40	20	37,5	\	1	FCS3BDS605◊Δ##F2C0CE3
	7	7,3	9,7	315	10,7	20	45	30	42,5	37	22	37,5	10,2	1	FCS3BDS705◊Δ##FQC3CE3
	8	8,5	11,2	360	9,5	17	45	30	42,5	44	24	37,5	10,2	1	FCS3BDS805◊Δ##F9C3CE3
	10	9,4	12,4	450	7,6	17	45	30	42,5	44	24	37,5	10,2	1	FCS3BDS106◊Δ##F9C3CE3
		10,1	13,3	450	7,5	15	45	30	42,5	45	30	37,5	20,3	1,2	FCS3BDS106◊Δ##FFC9DE3
	15	13,2	17,3	675	5,1	13	45	30	42,5	50	35	37,5	20,3	1,2	FCS3BDS156◊Δ##FKC9DE3
	20	11,0	14,5	460	7,9	12	23	35	57,5	45	30	52,5	20,3	1,2	FCS3BDS206◊Δ##HHF9DE3

(1) Maximum permissible peak current, (2) Thermal resistance from hotspot to ambient (free convection)

U_R (VDC)	C_R (µF)	I_{max} ≤85°C, 10kHz (A)	I_{max} ≤70°C 10kHz (A)	Î (1) (A)	ESR_{typ} 70°C 10kHz (mΩ)	R_{th}(2) (K/W)	dV/dt 20°C (V/µs)	Ls_{typ} 25°C 1MHz (nH)	W +1/-1,5 (mm)	H +1/-1,5 (mm)	T +1/-1,5 (mm)	P_1 ±0,5 (mm)	P_2 ±0,5 (mm)	Ød ±0,05 (mm)	ORDER CODE ◊ = Tolerance Δ = Pin Style ## = Pin Length
1200 (≤85°C) 3B	25	13,4	17,6	575	6,4	10	23	35	57,5	50	35	52,5	20,3	1,2	FCS3BDS256◊Δ##HLF9DE3
	30	16,3	21,5	690	5,4	8	23	35	57,5	55	45	52,5	20,3	1,2	FCS3BDS306◊Δ##HSF9DE3
		17,4	22,9	690	5,4	7	23	35	57,5	60	35	52,5	20,3	1,2	FCS3BDS306◊Δ##H6F9DE3
1400 (≤70°C)	35	17,6	23,1	805	4,7	8	23	35	57,5	55	45	52,5	20,3	1,2	FCS3BDS356◊Δ##HSF9DE3
		20,9	27,5	805	4,4	6	23	35	57,5	70	35	52,5	20,3	1,2	FCS3BDS356◊Δ##H8F9DE3
	40	21,5	28,3	920	4,2	6	23	35	57,5	60	45	52,5	20,3	1,2	FCS3BDS406◊Δ##H2F9DE3
	45	21,0	27,6	1035	3,8	7	23	35	57,5	65	45	52,5	20,3	1,2	FCS3BDS456◊Δ##H7F9DE3
1500 (≤85°C) C3	6,5	8,7	11,4	293	9,0	17	45	30	42	42	28	37,5	10,2	1	FCSC3DS655◊Δ##FHC3CE3
	11	12,8	16,9	330	5,4	13	30	30	42	50	35	37,5	20,3	1,2	FCSC3DS116◊Δ##FKC9DE3
	12	10,8	14,3	300	9,8	10	25	35	57,5	50	35	52,5	20,3	1,2	FCSC3DS126◊Δ##HLF9DE3
1600 (≤70°C)															

(1) Maximum permissible peak current, (2) Thermal resistance from hotspot to ambient (free convection)

125°C DC Link Capacitors:

Please contact our Sales Office team.
Jianghai Europe Electronic Components GmbH
Tel.: 0049 (0) 21 51 / 65 20 88-0
info@jianghai-europe.com

GOOD TO KNOW:

Next to the possibility to subscribe to our newsletter, our website offers a lot of interesting technical information for you.

Just have a look!

https://jianghai-europe.com

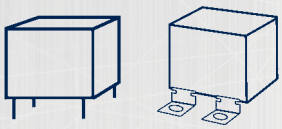

SNUBBER CAPACITORS

SERIES	CODE	INFO	TEMPERATURE	TERMINAL	PAGE
CBB 161	IL		105°C	FLANGE CONTACT	**34**
CBB 162	IP		105°C	SOLDERING PIN	**39**
CBB 164	IA	NEW	105°C	SOLDERING PIN	**44**
CBB 165	IS		105°C	FLANGE CONTACT	**48**
CBB 166	IG		105°C	SOLDERING PIN	**52**

FEATURES

- 105°C
- Very low dissipation factor
- Highest peak pulse capability
- Double-sided metallized electrodes
- Internal series connection
- Metal sprayed contacts for low ESL
- Plates for direct IGBT connection
- Self-healing

OVERVIEW

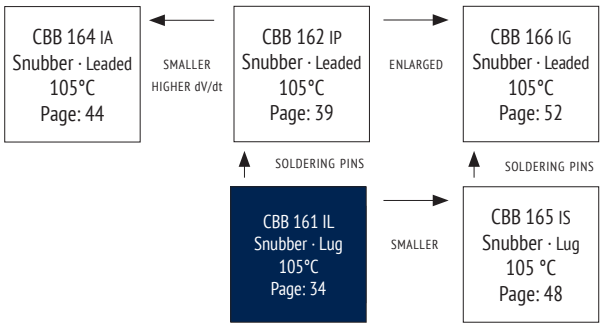

PRODUCT

APPLICATIONS

- High pulse and high frequency circuits
- IGBT applications

CHARACTERISTICS

ITEM	CHARACTERISTICS
Climatic Category	40/105/56 (IEC 61071)
Operating Temperature	−40 ~ +105°C ($\Theta_{hotspot}$ ⩽ 105°C) $\Theta_{hotspot}$ = 85~105°C: See Voltage Derating Diagram
Storage Temperature	−40 ~ +105°C
Rated Voltage U_{RDC}	700 ~ 2 000V_{DC}
Capacitance Range	0,2 ~ 7,5µF
Capacitance Tolerance	±10% (K), ±5% (J)
Voltage between Terminals U_{TT}	1,5 * U_{RDC} (20°C, 10s)
Voltage between Terminals & Case U_{TC}	3 000V_{AC} (20°C, 50Hz, 10s)
Capacitor Dissipation Factor tan ∂	⩽ 10 * 10^{-4} (20°C, 1kHz)
Dielectric Dissipation Factor tan ∂_o	⩽ 20 * 10^{-4} (20°C, 1kHz)
Insulation Resistance R_i*C_R	C_R ⩽ 0,33µF: R_i ⩾ 100 000MΩ C_R > 0,33µF: R_i*C_R ⩾ 30 000MΩ * µF (20°C, 100V_{DC}, 1 min)
Max. Overvoltage	Please see IEC 61071
Life Time Expectancy	⩾ 100.000h, failure rate ⩽ 50 FIT (70°C)
Reference Standard	IEC 61071:2007, REACH, RoHS

ENVIRONMENTAL

The products are RoHS, WEEE and REACh compliant.

The detailed version please see seperate "Environmental Certificates" document or www.jianghai-europe.com

APPROVALS

UL94-V0:

Plastic & Compound Mass

LIFETIME

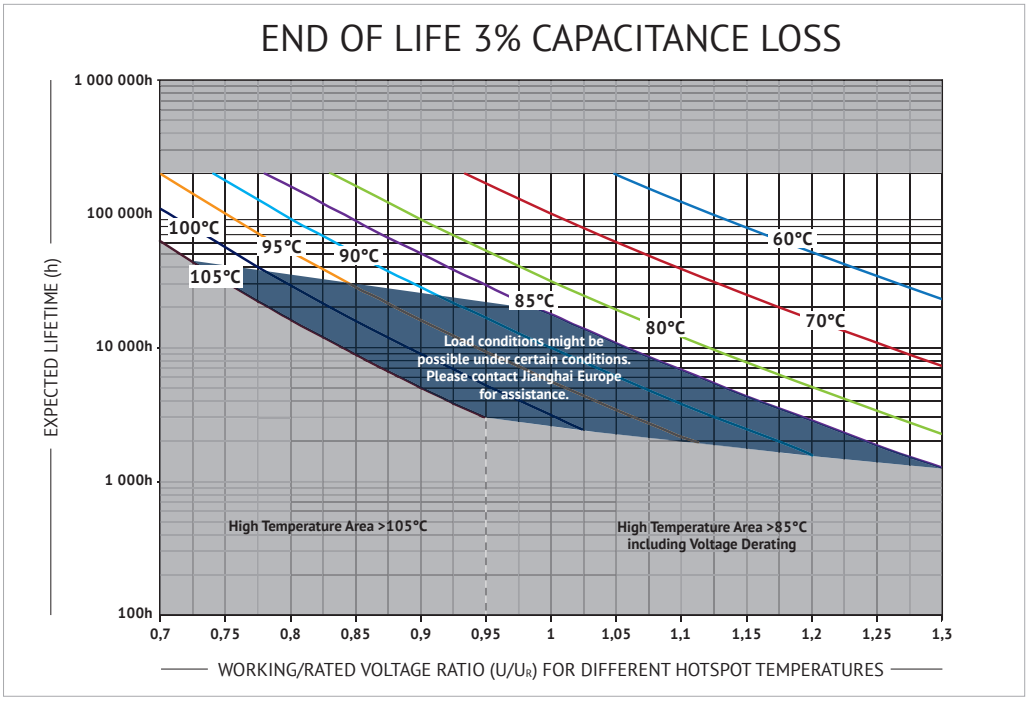

CURRENT DERATING

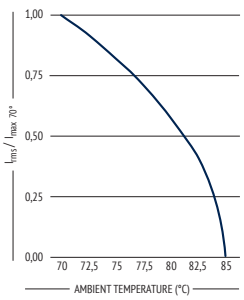

VOLTAGE DERATING

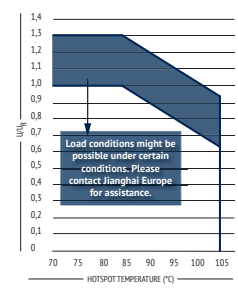

SNUBBER

DIMENSIONS

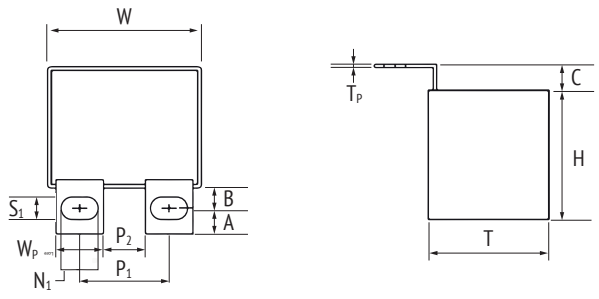

STYLE A

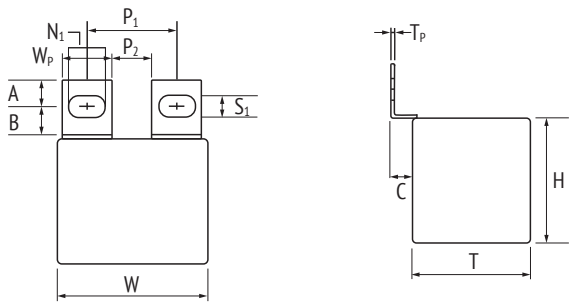

STYLE B

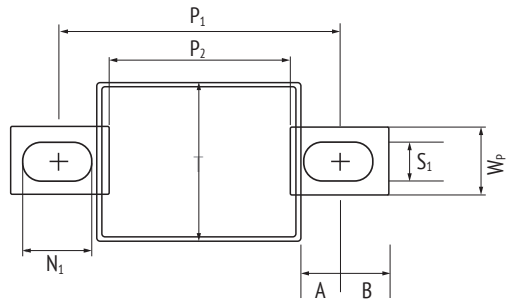

STYLE C

Terminal Style	Length of Case W+1/-1,5 (mm)	Mounting Hole Pitch P_1±0,5 (mm)	Gap between Terminals P_2±0,5 (mm)	Width Terminal Plate W_P±0,3 (mm)	Thickness Terminal T_P±0,1 (mm)	Distance of Terminal C±1 (mm)	Width of Hole S_1±0,1 (mm)	Length of Hole N_1±0,3 (mm)	Position of Hole A±0,2 (mm)	Distance of Hole B±0,2 (mm)
Style A/B	42,5	24,0	10,0	14,0	1,0	6,0	M6: 6,5 M8: 8,5	M6: 8,5 M8: 10,5	7,0	7,0
Style A/B	42,5	26,0	12,0	14,0	1,0	6,0	M6: 6,5 M8: 8,5	M6: 8,5 M8: 10,5	7,0	7,0
Style A/B	57,5	24,0	10,0	14,0	1,0	6,0	M6: 6,5 M8: 8,5	M6: 8,5 M8: 10,5	7,0	7,0
Style A/B	57,5	37,0	23,0	14,0	1,0	6,0	M6: 6,5 M8: 8,5	M6: 8,5 M8: 10,5	7,0	7,0
Style C	42,5	60,0	38,0	14,0	1,0	6,0	M8: 8,2	M8: 14	8,5	10,0
Style C	57,5	75,0	53,0	14,0	1,0	6,0	M8: 8,2	M8: 14	8,5	10,0

INTERNAL CONSTRUCTION (EXAMPLE)

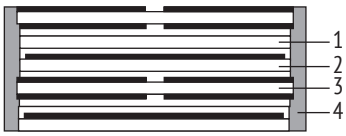

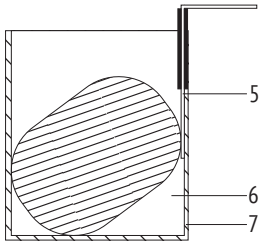

NO.	ITEM	MATERIAL
1	Dielectric Film	Polypropylene
2	Single-sided Metallized Film	PP + Al
3	Double-sided Metallized Carrier Film	PET + Al
4	Metal Sprayed Contact	Zn + Sn/Zn
5	Terminal	Sn-coated Cu
6	Potting Compound	Epoxy
7	Case	Flame retardant PBT/PPS

MARKING

ORDER CODE

FC	S	3B		IL	105		K		A		FA		40		26		19		1		E 3
Capacitor type	Product shape	DC rated voltage code (V)		Series code	Capacitance Code (μF)		Capacitance tolerance		Plate Style (mm)		Dimension Code (mm)		Pitch P_1 (mm)		Gap P_2 (mm)		Width of plates Wp (mm)		Hole Shape		For internal use
Film Cap. = **FC**	Square box = **S**	700	**2Q**	CBB 161 = **IL**	0,22	**224**	±5%	**J**	Style A	**A**	42,5 x 28 x 24	**FA**	24	**24**	10	**10**	14	**14**	Circular M6	**0**	
		850	**K2**		0,33	**334**	±10%	**K**	Style B	**B**	42,5 x 33 x 33	**FB**	26	**26**	12	**12**			Oval M6: 6,5x8,5	**1**	
		1000	**3A**		0,47	**474**			Style C	**C**	42,5 x 35,5 x 33,5	**FC**	37	**37**	23	**23**			Circular M8	**2**	
		1200	**3B**		0,68	**684**					42,5 x 36 x 24	**FD**	60	**60**	38	**38**			Oval M8: 8,5x10,5	**3**	
		1600	**3C**		0,82	**824**					42,5 x 43 x 42	**FE**	75	**75**	53	**53**			Oval M6: 6,5x10,5	**7**	
		2000	**3D**		1,0	**105**					42,5 x 45 x 30	**FF**							Oval 9x12	**5**	
					1,2	**125**					57,5 x 43,5 x 29,5	**HG**							Circular ø5,5	**A**	
					1,5	**155**					57,5 x 45 x 30	**HH**							Circular ø7,0	**C**	
					2,0	**205**					57,5 x 45 x 35	**HJ**							Circular ø5,0	**E**	
					2,2	**225**					57,5 x 45 x 45	**HK**							Oval 8,5x14,5	**D**	
					2,5	**255**					57,5 x 50 x 35	**HL**									
					3,0	**305**					57,5 x 55 x 40	**HM**									
					3,3	**335**															
					4,0	**405**															
					4,7	**475**															
					5,0	**505**															
					6,0	**605**															
					6,8	**685**															
					10,0	**106**															

SNUBBER

RATINGS

U_R ≤85°C (V)	C_R (µF)	dV/dt 20°C (V/µs)	$\hat{I}$ (1) (A)	ESR_{typ} 20°C 100kHz (mΩ)	L_S 20°C (nH)	I_{max} 70°C 100kHz (A)	W +1/-1,5 (mm)	H +1/-1,5 (mm)	T +1/-1,5 (mm)	ORDER CODE "#" to be defined, see ordering code table
700 V_{DC} 420 V_{AC} 2Q	1,20	325	390	10	≤30	12,4	42,5	28	24	FCS2QIL125##FA####14#E3
	1,80	325	585	8	≤30	16,8	42,5	36	24	FCS2QIL185##FD####14#E3
	2,20	325	715	7	≤30	18,8	42,5	35,5	33,5	FCS2QIL225##FC####14#E3
	2,50	325	813	6	≤30	20,3	42,5	35,5	33,5	FCS2QIL255##FC####14#E3
	3,00	325	975	5	≤30	22,4	42,5	45	30	FCS2QIL305##FF####14#E3
	4,00	325	1300	4	≤30	25,0	42,5	43	42	FCS2QIL405##FE####14#E3
	4,20	260	1092	3	≤35	26,0	57,5	43,5	29,5	FCS2QIL425##HG####14#E3
	4,50	260	1170	3	≤35	26,0	57,5	45	30	FCS2QIL455##HH####14#E3
	5,00	260	1300	3	≤35	27,0	57,5	45	35	FCS2QIL505##HJ####14#E3
	5,50	260	1430	2	≤35	27,0	57,5	50	35	FCS2QIL555##HL####14#E3
	6,00	260	1560	2	≤35	28,0	57,5	45	45	FCS2QIL605##HK####14#E3
	7,50	260	1950	2	≤35	30,0	57,5	55	40	FCS2QIL755##HM####14#E3
850 V_{DC} 450 V_{AC} K2	0,47	650	306	10	≤30	11,5	42,5	28	24	FCSK2IL474##FA####14#E3
	0,70	650	455	10	≤30	15,3	42,5	36	24	FCSK2IL704##FD####14#E3
	0,80	650	520	10	≤30	11,8	42,5	28	24	FCSK2IL804##FA####14#E3
		650	520	9	≤30	17,2	42,5	35,5	33,5	FCSK2IL804##FC####14#E3
	1,00	650	650	8	≤30	18,6	42,5	35,5	33,5	FCSK2IL105##FC####14#E3
	1,20	650	780	9	≤30	15,6	42,5	36	24	FCSK2IL125##FD####14#E3
		650	780	7	≤30	20,6	42,5	45	30	FCSK2IL125##FF####14#E3
	1,50	650	975	8	≤30	17,6	42,5	35,5	33,5	FCSK2IL155##FC####14#E3
		650	975	6	≤30	22,0	42,5	43	42	FCSK2IL155##FE####14#E3
		455	683	6	≤35	22,0	57,5	43,5	29,5	FCSK2IL155##HG####14#E3
	1,80	650	1170	7	≤30	19,8	42,5	35,5	33,5	FCSK2IL185##FC####14#E3
		455	819	6	≤35	23,0	57,5	45	30	FCSK2IL185##HH####14#E3
	2,00	455	910	5	≤35	24,0	57,5	45	35	FCSK2IL205##HJ####14#E3
	2,20	650	1430	6	≤30	21,5	42,5	45	30	FCSK2IL225##FF####14#E3
		455	1001	5	≤35	24,0	57,5	50	35	FCSK2IL225##HL####14#E3
	2,50	455	1138	4	≤35	25,0	57,5	45	45	FCSK2IL255##HK####14#E3
	2,80	650	1820	5	≤30	24,0	42,5	43	42	FCSK2IL285##FE####14#E3
	3,00	455	1365	4	≤35	24,0	57,5	43,5	29,5	FCSK2IL305##HG####14#E3
		455	1365	4	≤35	25,0	57,5	45	30	FCSK2IL305##HH####14#E3
		455	1365	4	≤35	26,0	57,5	55	40	FCSK2IL305##HM####14#E3
	3,50	455	1592	4	≤35	25,0	57,5	45	35	FCSK2IL355##HJ####14#E3
	4,50	455	2047	3	≤35	27,0	57,5	50	35	FCSK2IL455##HL####14#E3
	5,00	455	2275	3	≤35	27,0	57,5	45	45	FCSK2IL505##HK####14#E3
		455	2275	2	≤35	29,0	57,5	55	40	FCSK2IL505##HM####14#E3
1000 V_{DC} 500 V_{AC} 3A	0,65	500	325	10	≤30	11,6	42,5	28	24	FCS3AIL654##FA####14#E3
	1,00	500	500	9	≤30	15,5	42,5	36	24	FCS3AIL105##FD####14#E3
	1,20	500	600	8	≤30	17,5	42,5	35,5	33,5	FCS3AIL125##FC####14#E3
	1,40	500	700	7	≤30	18,8	42,5	35,5	33,5	FCS3AIL145##FC####14#E3
	1,80	500	900	6	≤30	21,0	42,5	45	30	FCS3AIL185##FF####14#E3
	2,20	500	1100	5	≤30	23,0	42,5	43	42	FCS3AIL225##FE####14#E3
		350	770	6	≤35	23,0	57,5	43,5	29,5	FCS3AIL225##HG####14#E3
	2,50	350	875	5	≤35	24,0	57,5	45	30	FCS3AIL255##HH####14#E3
	3,00	350	1050	5	≤35	24,0	57,5	45	35	FCS3AIL305##HJ####14#E3
	3,30	350	1155	4	≤35	25,0	57,5	50	35	FCS3AIL335##HL####14#E3
	3,50	350	1225	4	≤35	25,0	57,5	45	45	FCS3AIL355##HK####14#E3
	4,50	350	1575	4	≤35	28,0	57,5	55	40	FCS3AIL455##HM####14#E3
1200 V_{DC} 600 V_{AC} 3B	0,33	800	264	11	≤30	11,4	42,5	28	24	FCS3BIL334##FA####14#E3
	0,47	800	376	10	≤30	11,5	42,5	28	24	FCS3BIL474##FA####14#E3
	0,50	800	400	10	≤30	15,0	42,5	36	24	FCS3BIL504##FD####14#E3
	0,60	800	480	9	≤30	16,8	42,5	35,5	33,5	FCS3BIL604##FC####14#E3
	0,70	800	560	9	≤30	18,4	42,5	35,5	33,5	FCS3BIL704##FC####14#E3
		800	560	10	≤30	15,3	42,5	36	24	FCS3BIL704##FD####14#E3
	0,80	800	640	9	≤30	17,2	42,5	35,5	33,5	FCS3BIL804##FC####14#E3
		800	640	8	≤30	20,5	42,5	45	30	FCS3BIL804##FF####14#E3
	1,00	800	800	8	≤30	18,6	42,5	35,5	33,5	FCS3BIL105##FC####14#E3
		800	800	7	≤30	21,0	42,5	43	42	FCS3BIL105##FE####14#E3
		560	560	6	≤35	22,0	57,5	43,5	29,5	FCS3BIL105##HG####14#E3
	1,20	800	960	7	≤30	20,6	42,5	45	30	FCS3BIL125##FF####14#E3
		560	672	6	≤35	22,0	57,5	45	30	FCS3BIL125##HH####14#E3

(1) Maximum permissible peak current

>>

SNUBBER

U_R ≤85°C (V)	C_R (µF)	dV/dt 20°C (V/µs)	Î (1) (A)	ESR_{typ} 20°C 100kHz (mΩ)	L_S 20°C (nH)	I_{max} 70°C 100kHz (A)	W +1/-1,5 (mm)	H +1/-1,5 (mm)	T +1/-1,5 (mm)	ORDER CODE "#" to be defined, see ordering code table
1200 V_{DC} 600 V_{AC} 3B	1,40	560	784	5	≤35	23,0	57,5	45	35	FCS3BIL145##HJ####14#E3
	1,50	800	1200	6	≤30	22,0	42,5	43	42	FCS3BIL155##FE####14#E3
		560	840	6	≤35	22,0	57,5	43,5	29,5	FCS3BIL155##HG####14#E3
	1,60	560	896	5	≤35	23,0	57,5	50	35	FCS3BIL165##HL####14#E3
	1,70	560	952	4	≤35	24,0	57,5	45	45	FCS3BIL175##HK####14#E3
	1,80	560	1008	6	≤35	23,0	57,5	45	30	FCS3BIL185##HH####14#E3
	2,00	560	1120	5	≤35	24,0	57,5	45	35	FCS3BIL205##HJ####14#E3
		560	1120	4	≤35	25,0	57,5	55	40	FCS3BIL205##HM####14#E3
	2,20	560	1232	5	≤35	24,0	57,5	50	35	FCS3BIL225##HL####14#E3
	2,50	560	1400	4	≤35	25,0	57,5	45	45	FCS3BIL255##HK####14#E3
	3,00	560	1680	4	≤35	26,0	57,5	55	40	FCS3BIL305##HM####14#E3
1600 V_{DC} 650 V_{AC} 3C	0,33	800	264	11	≤30	11,4	42,5	28	24	FCS3CIL334##FA####14#E3
	0,50	800	400	10	≤30	15,0	42,5	36	24	FCS3CIL504##FD####14#E3
	0,60	800	480	9	≤30	16,8	42,5	35,5	33,5	FCS3CIL604##FC####14#E3
	0,70	800	560	9	≤30	18,4	42,5	35,5	33,5	FCS3CIL704##FC####14#E3
	0,80	800	640	8	≤30	20,5	42,5	45	30	FCS3CIL804##FF####14#E3
	1,00	800	800	7	≤30	21,0	42,5	43	42	FCS3CIL105##FE####14#E3
		560	560	6	≤35	22,0	57,5	43,5	29,5	FCS3CIL105##HG####14#E3
	1,20	560	672	6	≤35	22,0	57,5	45	30	FCS3CIL125##HH####14#E3
	1,40	560	784	5	≤35	23,0	57,5	45	35	FCS3CIL145##HJ####14#E3
	1,60	560	896	5	≤35	23,0	57,5	50	35	FCS3CIL165##HL####14#E3
	1,70	560	952	4	≤35	24,0	57,5	45	45	FCS3CIL175##HK####14#E3
	2,00	560	1120	4	≤35	25,0	57,5	55	40	FCS3CIL205##HM####14#E3
2000 V_{DC} 700 V_{AC} 3D	0,20	1000	200	11	≤30	11,3	42,5	28	24	FCS3DIL204##FA####14#E3
	0,30	1000	300	11	≤30	14,9	42,5	36	24	FCS3DIL304##FD####14#E3
	0,39	1000	390	10	≤30	16,6	42,5	35,5	33,5	FCS3DIL394##FC####14#E3
	0,42	1000	420	9	≤30	18,2	42,5	35,5	33,5	FCS3DIL424##FC####14#E3
	0,56	1000	560	9	≤30	20,1	42,5	45	30	FCS3DIL564##FF####14#E3
	0,70	1000	700	8	≤30	20,0	42,5	43	42	FCS3DIL704##FE####14#E3
	0,75	720	540	8	≤35	21,0	57,5	43,5	29,5	FCS3DIL754##HG####14#E3
	0,82	720	590	7	≤35	21,0	57,5	45	30	FCS3DIL824##HH####14#E3
	0,90	720	648	6	≤35	22,0	57,5	45	35	FCS3DIL904##HJ####14#E3
	1,00	720	720	6	≤35	22,0	57,5	50	35	FCS3DIL105##HL####14#E3
	1,20	720	864	5	≤35	22,0	57,5	45	45	FCS3DIL125##HK####14#E3
	1,40	720	1008	4	≤35	24,0	57,5	55	40	FCS3DIL145##HM####14#E3

(1) Maximum permissible peak current

SNUBBER

FEATURES

- Very low dissipation factor
- Highest peak pulse capability
- Design for Snubber Application
- Self-healing
- Soldering Terminal

OVERVIEW

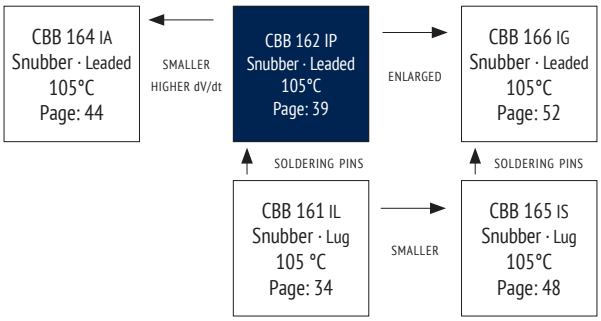

PRODUCT

APPLICATIONS

- High pulse and high frequency circuits
- IGBT applications

CHARACTERISTICS

ITEM	CHARACTERISTICS
Climatic Category	40/105/56 (IEC 61071)
Operating Temperature	−40 ~ +105°C ($\Theta_{hotspot}$ ≤ 105°C) $\Theta_{hotspot}$ = 85~105°C: See Voltage Derating Diagram
Storage Temperature	−40 ~ +105°C
Rated Voltage U_{RDC}	630 ~ 2 000V_{DC}
Capacitance Range	0,001 ~ 1,8µF
Capacitance Tolerance	±10% (K), ±5% (J)
Voltage between Terminals U_{TT}	1,5 * U_{RDC} (20°C, 10s)
Voltage between Terminals & Case U_{TC}	≥ 3 000V_{AC} (20°C, 50 Hz, 10s)
Capacitor Dissipation Factor tan ∂	≤ 10 * 10^{-4} (20°C, 1kHz)
Dielectric Dissipation Factor tan $∂_0$	≤ 2 * 10^{-4} (20°C, 1kHz)
Insulation Resistance R_i*C_R	C_R ≤ 0,33µF: R_i ≥ 100 000MΩ C_R > 0,33µF: R_i*C_R ≥ 30 000MΩ * µF (20°C, 100V_{DC}, 1min)
Max. Overvoltage	Please see IEC 61071
Life Time Expectancy	≥ 100 000h, failure rate ≤ 100 FIT (70°C)
Reference Standard	IEC 61071:2007

ENVIRONMENTAL

The products are RoHS, WEEE and REACh compliant.

The detailed version please see seperate "Environmental Certificates" document or www.jianghai-europe.com

APPROVALS

UL94-V0:

Plastic & Compound Mass

LIFETIME

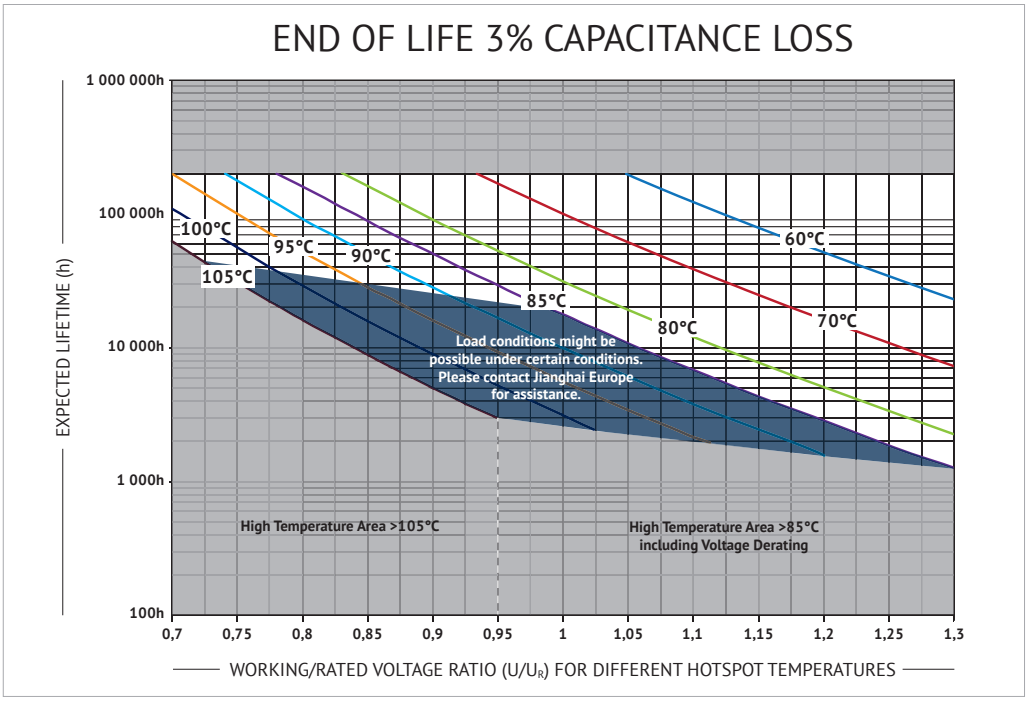

VOLTAGE DERATING

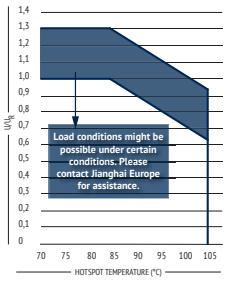

SNUBBER

DIMENSIONS

4 PIN TYPE

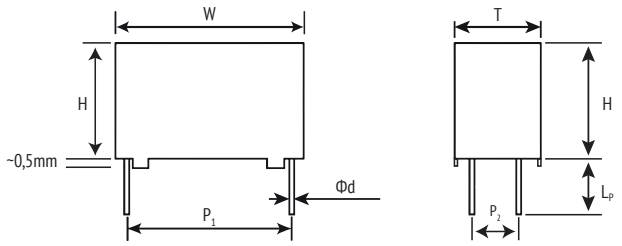

2 PIN TYPE

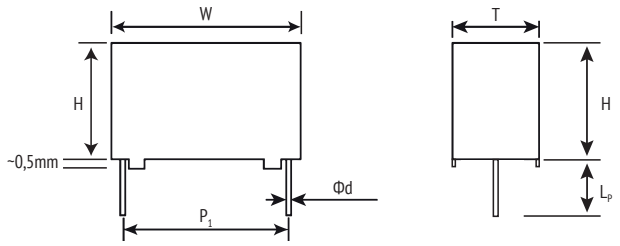

Lp = 5,0 ±1mm · other styles on request

INTERNAL CONSTRUCTION (EXAMPLE)

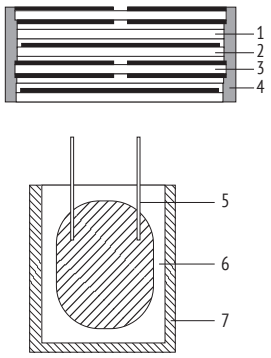

NO.	ITEM	MATERIAL
1	Dielectric Film	Polypropylene
2	Single-sided Metallized Film	PP + Al
3	Double-sided Metallized Carrier Film	PET + Al
4	Metal Sprayed Contact	Zn + Sn/Zn
5	Terminal	Sn-coated Cu
6	Potting Compound	Epoxy
7	Case	Flame retardant PBT/PPS

MARKING

Jianghai

CBB 162

1μF K 1200V

G08F45

BRAND

PRODUCT SERIES

CAPACITANCE, TOLERANCE AND RATETD VOLTAGE

DATE CODE

ORDER CODE

FC	S	3B	IP	105	K	0	50	FA	9	0	A	E 3
Capacitor type	Product shape	DC rated voltage code (V)	Series code	Capacitance Code (μF)	Capacitance tolerance	Pin Style (mm)	Pin Length (mm)	Dimension Code (mm) W x H x T ±1,0 ±1,0 ±1,0	Pitch P_1 (mm)	Pitch P_2 (mm)	Leadwire Diameter Ød	For internal use
Film Cap. = **FC**	Square box = **S**	630 **J2**	CBB 162 = **IP**	0,0010 **102**	±5% **J**	2 Pin, straight leads cut **0**	long leads **00**	13 x 11 x 5 **C4**	10,0 **3**	- **0**	0,6 **A**	
		1000 **3A**		0,0015 **152**	±10% **K**	2 Pin, long leads **1**	3,0 **30**	13 x 12 x 6 **C5**	15,0 **5**	5,1 **1**	0,8 **B**	
		1200 **3B**		0,047 **473**		4 Pin, straight leads cut **2**	3,2 **32**	13 x 13 x 7 **C8**	22,5 **7**	10,2 **3**		
		1600 **3C**		0,68 **684**			3,5 **35**	18 x 11 x 5 **E2**	27,5 **9**	12,7 **4**		
		2000 **3D**		0,82 **824**			5,0 **50**	18 x 12 x 6 **E5**				
				1,0 **105**			6,0 **60**	18 x 13,5 x 7,5 **E7**				
				1,2 **125**			13,0 **A0**	18 x 14,5 x 8,5 **E8**				
							15 **A1**	18 x 16 x 10 **EC**				
							17,5 **A2**	18 x 19 x 11 **EG**				
								26,5 x 16,5 x 7 **B2**				
								26,5 x 17 x 8,5 **B3**				
								26,5 x 19 x 10 **B4**				
								26,5 x 20 x 11 **B5**				
								26,5 x 23 x 13 **B6**				
								32 x 20 x 11 **I4**				
								32 x 22 x 13 **I7**				
								32 x 24,5 x 13 **I8**				
								32 x 28 x 14 **IC**				
								32 x 33 x 18 **IF**				
								32 x 37 x 22 **II**				

SNUBBER

RATINGS

U_R ≤85°C (V)	C_R (µF)	dV/dt (V/µs)	Î (1) (A)	W +1/-1,5 (mm)	H +1/-1,5 (mm)	T +1/-1,5 (mm)	P_1 ±0,5 (mm)	P_2 ±0,5 (mm)	ød ±0,05 (mm)	ORDER CODE # = Tolerance · Δ = Pin Style ++ = Pin Length · $ = Pitch P2
630 V_{DC} 420 V_{AC} J2	0,010	3 000	30,0	13	11	5	10	-	0,6	FCSJ2IP103#Δ++C430AE3
		2 500	25,0	18	11	5	15	-	0,8	FCSJ2IP103#Δ++E250BE3
	0,012	3 000	36,0	13	11	5	10	-	0,6	FCSJ2IP123#Δ++C430AE3
		2 500	30,0	18	11	5	15	-	0,8	FCSJ2IP123#Δ++E250BE3
	0,015	3 000	45,0	13	12	6	10	-	0,6	FCSJ2IP153#Δ++C530AE3
		2 500	37,5	18	11	5	15	-	0,8	FCSJ2IP153#Δ++E250BE3
	0,018	3 000	54,0	13	12	6	10	-	0,6	FCSJ2IP183#Δ++C530AE3
		2 500	45,0	18	11	5	15	-	0,8	FCSJ2IP183#Δ++E250BE3
	0,020	3 000	60,0	13	13	7	10	-	0,6	FCSJ2IP203#Δ++C830AE3
		2 500	50,0	18	11	5	15	-	0,8	FCSJ2IP203#Δ++E250BE3
	0,022	3 000	66,0	13	13	7	10	-	0,6	FCSJ2IP223#Δ++C830AE3
		2 500	55,0	18	11	5	15	-	0,8	FCSJ2IP223#Δ++E250BE3
	0,027	2 500	67,5	18	12	6	15	-	0,8	FCSJ2IP273#Δ++E550BE3
	0,033	2 500	82,5	18	12	6	15	-	0,8	FCSJ2IP333#Δ++E550BE3
	0,039	2 500	97,5	18	12	6	15	-	0,8	FCSJ2IP393#Δ++E550BE3
	0,047	2 500	117	18	13,5	7,5	15	-	0,8	FCSJ2IP473#Δ++E750BE3
	0,056	2 500	140	18	13,5	7,5	15	-	0,8	FCSJ2IP563#Δ++E750BE3
	0,068	2 500	170	18	14,5	8,5	15	-	0,8	FCSJ2IP683#Δ++E850BE3
	0,082	2 500	205	18	16	10	15	-	0,8	FCSJ2IP823#Δ++EC50BE3
	0,10	2 500	250	18	16	10	15	-	0,8	FCSJ2IP104#Δ++EC50BE3
	0,12	2 500	300	18	19	11	15	-	0,8	FCSJ2IP124#Δ++EG50BE3
		1 500	180	26,5	16,5	7	22,5	-	0,8	FCSJ2IP124#Δ++B270BE3
	0,15	1 500	225	26,5	17	8,5	22,5	-	0,8	FCSJ2IP154#Δ++B370BE3
	0,18	1 500	270	26,5	17	8,5	22,5	-	0,8	FCSJ2IP184#Δ++B370BE3
	0,22	1 500	330	26,5	19	10	22,5	-	0,8	FCSJ2IP224#Δ++B470BE3
	0,27	1 500	405	26,5	20	11	22,5	-	0,8	FCSJ2IP274#Δ++B570BE3
	0,33	1 500	495	26,5	20	11	22,5	-	0,8	FCSJ2IP334#Δ++B570BE3
	0,39	1 500	585	26,5	23	13	22,5	-	0,8	FCSJ2IP394#Δ++B670BE3
	0,47	900	423	32	22	13	27,5	-/5,1/10,2	0,8	FCSJ2IP474#Δ++I79$BE3
	0,56	900	504	32	22	13	27,5	-/5,1/10,2	0,8	FCSJ2IP564#Δ++I79$BE3
	0,68	900	612	32	24,5	13	27,5	-/5,1/10,2	0,8	FCSJ2IP684#Δ++I89$BE3
	0,82	900	738	32	28	14	27,5	-/5,1/10,2	0,8	FCSJ2IP824#Δ++IC9$BE3
	1,0	900	900	32	33	18	27,5	-/5,1/10,2/12,7	0,8	FCSJ2IP105#Δ++IF9$BE3
	1,2	900	1080	32	33	18	27,5	-/5,1/10,2/12,7	0,8	FCSJ2IP125#Δ++IF9$BE3
	1,5	900	1350	32	37	22	27,5	-/5,1/10,2/12,7	0,8	FCSJ2IP155#Δ++II9$BE3
	1,8	900	1620	32	37	22	27,5	-/5,1/10,2/12,7	0,8	FCSJ2IP185#Δ++II9$BE3
1000 V_{DC} 500 V_{AC} 3A	0,010	3 000	30,0	13	11	5	10	-	0,6	FCS3AIP103#Δ++C430AE3
		2 500	25,0	18	11	5	15	-	0,8	FCS3AIP103#Δ++E250BE3
	0,012	3 000	36,0	13	11	5	10	-	0,6	FCS3AIP123#Δ++C430AE3
		2 500	30,0	18	11	5	15	-	0,8	FCS3AIP123#Δ++E250BE3
	0,015	3 000	45,0	13	12	6	10	-	0,6	FCS3AIP153#Δ++C530AE3
		2 500	37,5	18	11	5	15	-	0,8	FCS3AIP153#Δ++E250BE3
	0,018	3 000	54,0	13	12	6	10	-	0,6	FCS3AIP183#Δ++C530AE3
		2 500	45,0	18	11	5	15	-	0,8	FCS3AIP183#Δ++E250BE3
	0,020	3 000	60,0	13	13	7	10	-	0,6	FCS3AIP203#Δ++C830AE3
		2 500	50,0	18	11	5	15	-	0,8	FCS3AIP203#Δ++E250BE3
	0,022	3 000	66,0	13	13	7	10	-	0,6	FCS3AIP223#Δ++C830AE3
		2 500	55,0	18	11	5	15	-	0,8	FCS3AIP223#Δ++E250BE3
	0,027	2 500	67,5	18	12	6	15	-	0,8	FCS3AIP273#Δ++E550BE3
	0,033	2 500	82,5	18	12	6	15	-	0,8	FCS3AIP333#Δ++E550BE3
	0,039	2 500	97,5	18	12	6	15	-	0,8	FCS3AIP393#Δ++E550BE3
	0,047	2 500	117	18	13,5	7,5	15	-	0,8	FCS3AIP473#Δ++E750BE3
	0,056	2 500	140	18	13,5	7,5	15	-	0,8	FCS3AIP563#Δ++E750BE3
	0,068	2 500	170	18	14,5	8,5	15	-	0,8	FCS3AIP683#Δ++E850BE3
	0,082	2 500	205	18	16	10	15	-	0,8	FCS3AIP823#Δ++EC50BE3
	0,10	2 500	250	18	16	10	15	-	0,8	FCS3AIP104#Δ++EC50BE3
	0,12	2 500	300	18	19	11	15	-	0,8	FCS3AIP124#Δ++EG50BE3
		1 500	180	26,5	16,5	7	22,5	-	0,8	FCS3AIP124#Δ++B270BE3
	0,15	1 500	225	26,5	17	8,5	22,5	-	0,8	FCS3AIP154#Δ++B370BE3
	0,18	1 500	270	26,5	17	8,5	22,5	-	0,8	FCS3AIP184#Δ++B370BE3
	0,22	1 500	330	26,5	19	10	22,5	-	0,8	FCS3AIP224#Δ++B470BE3
	0,27	1 500	405	26,5	20	11	22,5	-	0,8	FCS3AIP274#Δ++B570BE3
	0,33	1 500	495	26,5	20	11	22,5	-	0,8	FCS3AIP334#Δ++B570BE3
	0,39	1 500	585	26,5	23	13	22,5	-	0,8	FCS3AIP394#Δ++B670BE3
	0,47	900	423	32	22	13	27,5	-/5,1/10,2	0,8	FCS3AIP474#Δ++I79$BE3

(1) Maximum permissible peak current

>>

SNUBBER

SNUBBER

U_R ≤85°C (V)	C_R (µF)	dV/dt (V/µs)	Î (1) (A)	W +1/-1,5 (mm)	H +1/-1,5 (mm)	T +1/-1,5 (mm)	P_1 ±0,5 (mm)	P_2 ±0,5 (mm)	ød ±0,05 (mm)	ORDER CODE # = Tolerance · Δ = Pin Style ++ = Pin Length · $ = Pitch P2
1000 V_{DC} 500 V_{AC} 3A	0,56	900	504	32	22	13	27,5	-/5,1/10,2	0,8	FCS3AIP564#Δ++I79$BE3
	0,68	900	612	32	24,5	13	27,5	-/5,1/10,2	0,8	FCS3AIP684#Δ++I89$BE3
	0,82	900	738	32	28	14	27,5	-/5,1/10,2	0,8	FCS3AIP824#Δ++IC9$BE3
	1,0	900	900	32	33	18	27,5	-/5,1/10,2/12,7	0,8	FCS3AIP105#Δ++IF9$BE3
	1,2	900	1080	32	33	18	27,5	-/5,1/10,2/12,7	0,8	FCS3AIP125#Δ++IF9$BE3
	1,5	900	1350	32	37	22	27,5	-/5,1/10,2/12,7	0,8	FCS3AIP155#Δ++II9$BE3
	1,8	900	1620	32	37	22	27,5	-/5,1/10,2/12,7	0,8	FCS3AIP185#Δ++II9$BE3
1200 V_{DC} 600 V_{AC} 3B	0,0039	4 800	18,7	13	11	5	10	-	0,6	FCS3BIP392#Δ++C430AE3
	0,0047	4 800	22,6	13	11	5	10	-	0,6	FCS3BIP472#Δ++C430AE3
	0,0056	4 800	26,9	13	11	5	10	-	0,6	FCS3BIP562#Δ++C430AE3
	0,0068	4 800	32,6	13	11	5	10	-	0,6	FCS3BIP682#Δ++C430AE3
	0,0082	4 800	39,4	13	11	5	10	-	0,6	FCS3BIP822#Δ++C430AE3
	0,010	3 300	33,0	18	11	5	15	-	0,8	FCS3BIP103#Δ++E250BE3
	0,012	3 300	39,6	18	11	5	15	-	0,8	FCS3BIP123#Δ++E250BE3
	0,015	3 300	49,5	18	11	5	15	-	0,8	FCS3BIP153#Δ++E250BE3
	0,018	3 300	59,4	18	11	5	15	-	0,8	FCS3BIP183#Δ++E250BE3
	0,020	3 300	66,0	18	11	5	15	-	0,8	FCS3BIP203#Δ++E250BE3
	0,022	3 300	72,6	18	12	6	15	-	0,8	FCS3BIP223#Δ++E550BE3
	0,027	3 300	89,1	18	13,5	7,5	15	-	0,8	FCS3BIP273#Δ++E750BE3
	0,033	3 300	109	18	13,5	7,5	15	-	0,8	FCS3BIP333#Δ++E750BE3
	0,039	3 300	129	18	14,5	8,5	15	-	0,8	FCS3BIP393#Δ++E850BE3
	0,047	2200	103	26,5	16,5	7	22,5	-	0,8	FCS3BIP473#Δ++B270BE3
	0,056	2200	123	26,5	16,5	7	22,5	-	0,8	FCS3BIP563#Δ++B270BE3
	0,068	2200	150	26,5	17	8,5	22,5	-	0,8	FCS3BIP683#Δ++B370BE3
	0,082	2200	180	26,5	19	10	22,5	-	0,8	FCS3BIP823#Δ++B470BE3
	0,10	2200	220	26,5	19	10	22,5	-	0,8	FCS3BIP104#Δ++B470BE3
	0,12	2200	264	26,5	20	11	22,5	-	0,8	FCS3BIP124#Δ++B570BE3
	0,15	2200	330	26,5	23	13	22,5	-	0,8	FCS3BIP154#Δ++B670BE3
	0,18	1 000	180	32	20	11	27,5	-/5,1/10,2	0,8	FCS3BIP184#Δ++I49$BE3
	0,22	1 000	220	32	22	13	27,5	-/5,1/10,2	0,8	FCS3BIP224#Δ++I79$BE3
	0,27	1 000	270	32	24,5	13	27,5	-/5,1/10,2	0,8	FCS3BIP274#Δ++I89$BE3
	0,33	1 000	330	32	28	14	27,5	-/5,1/10,2	0,8	FCS3BIP334#Δ++IC9$BE3
	0,39	1 000	390	32	33	18	27,5	-/5,1/10,2/12,7	0,8	FCS3BIP394#Δ++IF9$BE3
	0,56	1 000	560	32	37	22	27,5	-/5,1/10,2/12,7	0,8	FCS3BIP564#Δ++II9$BE3
	0,68	1 000	680	32	37	22	27,5	-/5,1/10,2/12,7	0,8	FCS3BIP684#Δ++II9$BE3
1600 V_{DC} 650 V_{AC} 3C	0,0056	6 000	33,6	18	11	5	15	-	0,8	FCS3CIP562#Δ++E250BE3
	0,0068	6 000	40,8	18	11	5	15	-	0,8	FCS3CIP682#Δ++E250BE3
	0,0082	6 000	49,2	18	11	5	15	-	0,8	FCS3CIP822#Δ++E250BE3
	0,010	6 000	60,0	18	11	5	15	-	0,8	FCS3CIP103#Δ++E250BE3
	0,012	6 000	72,0	18	12	6	15	-	0,8	FCS3CIP123#Δ++E550BE3
	0,015	6 000	90,0	18	12	6	15	-	0,8	FCS3CIP153#Δ++E550BE3
	0,018	6 000	108	18	13,5	7,5	15	-	0,8	FCS3CIP183#Δ++E750BE3
	0,022	6 000	132	18	13,5	7,5	15	-	0,8	FCS3CIP223#Δ++E750BE3
	0,027	6 000	162	18	14,5	8,5	15	-	0,8	FCS3CIP273#Δ++E850BE3
	0,033	6 000	198	18	14,5	8,5	15	-	0,8	FCS3CIP333#Δ++E850BE3
	0,039	3 000	117	26,5	16,5	7	22,5	-	0,8	FCS3CIP393#Δ++B270BE3
	0,047	3 000	141	26,5	16,5	7	22,5	-	0,8	FCS3CIP473#Δ++B270BE3
	0,056	3 000	168	26,5	17	8,5	22,5	-	0,8	FCS3CIP563#Δ++B370BE3
	0,068	3 000	204	26,5	19	10	22,5	-	0,8	FCS3CIP683#Δ++B470BE3
	0,082	3 000	246	26,5	19	10	22,5	-	0,8	FCS3CIP823#Δ++B470BE3
	0,10	3 000	300	26,5	20	11	22,5	-	0,8	FCS3CIP104#Δ++B570BE3
	0,12	2 000	240	32	22	13	27,5	-/5,1/10,2	0,8	FCS3CIP124#Δ++I79$BE3
	0,15	2 000	300	32	24,5	13	27,5	-/5,1/10,2	0,8	FCS3CIP154#Δ++I89$BE3
	0,18	2 000	360	32	28	14	27,5	-/5,1/10,2	0,8	FCS3CIP184#Δ++IC9$BE3
	0,22	2 000	440	32	33	18	27,5	-/5,1/10,2/12,7	0,8	FCS3CIP224#Δ++IF9$BE3
	0,27	2 000	540	32	33	18	27,5	-/5,1/10,2/12,7	0,8	FCS3CIP274#Δ++IF9$BE3
	0,33	2 000	660	32	33	18	27,5	-/5,1/10,2/12,7	0,8	FCS3CIP334#Δ++IF9$BE3
	0,39	2 000	780	32	37	22	27,5	-/5,1/10,2/12,7	0,8	FCS3CIP394#Δ++II9$BE3
	0,47	2 000	940	32	37	22	27,5	-/5,1/10,2/12,7	0,8	FCS3CIP474#Δ++II9$BE3
2000 V_{DC} 700 V_{AC} 3D	0,001	9 500	9,5	18	11	5	15	-	0,8	FCS3DIP102#Δ++E250BE3
	0,0012	9 500	11,4	18	11	5	15	-	0,8	FCS3DIP122#Δ++E250BE3
	0,0015	9 500	14,3	18	11	5	15	-	0,8	FCS3DIP152#Δ++E250BE3
	0,0018	9 500	17,1	18	11	5	15	-	0,8	FCS3DIP182#Δ++E250BE3
	0,0022	9 500	20,9	18	11	5	15	-	0,8	FCS3DIP222#Δ++E250BE3
	0,0027	9 500	25,7	18	11	5	15	-	0,8	FCS3DIP272#Δ++E250BE3
	0,0033	9 500	31,4	18	11	5	15	-	0,8	FCS3DIP332#Δ++E250BE3

(1) Maximum permissible peak current

U_R ≤85°C (V)	C_R (µF)	dV/dt (V/µs)	Î (1) (A)	W +1/-1,5 (mm)	H +1/-1,5 (mm)	T +1/-1,5 (mm)	P_1 ±0,5 (mm)	P_2 ±0,5 (mm)	ød ±0,05 (mm)	ORDER CODE # = Tolerance · Δ = Pin Style ++ = Pin Length · $ = Pitch P2
2000 V_{DC} 700 V_{AC} 3D	0,0039	9 500	37,1	18	11	5	15	-	0,8	FCS3DIP392#Δ++E250BE3
	0,0047	9 500	44,7	18	11	5	15	-	0,8	FCS3DIP472#Δ++E250BE3
	0,0056	9 500	53,2	18	12	6	15	-	0,8	FCS3DIP562#Δ++E550BE3
	0,0068	9 500	64,6	18	12	6	15	-	0,8	FCS3DIP682#Δ++E550BE3
	0,0082	9 500	77,9	18	12	6	15	-	0,8	FCS3DIP822#Δ++E550BE3
	0,010	9 500	95,0	18	13,5	7,5	15	-	0,8	FCS3DIP103#Δ++E750BE3
	0,012	9 500	114	18	14,5	8,5	15	-	0,8	FCS3DIP123#Δ++E850BE3
	0,015	9 500	143	18	14,5	8,5	15	-	0,8	FCS3DIP153#Δ++E850BE3
	0,018	9 500	171	18	16	10	15	-	0,8	FCS3DIP183#Δ++EC50BE3
	0,022	3 500	77,0	26,5	16,5	7	22,5	-	0,8	FCS3DIP223#Δ++B270BE3
	0,027	3 500	94,5	26,5	16,5	7	22,5	-	0,8	FCS3DIP273#Δ++B270BE3
	0,033	3 500	116	26,5	17	8,5	22,5	-	0,8	FCS3DIP333#Δ++B370BE3
	0,039	3 500	137	26,5	19	10	22,5	-	0,8	FCS3DIP393#Δ++B470BE3
	0,047	3 500	165	26,5	19	10	22,5	-	0,8	FCS3DIP473#Δ++B470BE3
	0,056	3 500	196	26,5	20	11	22,5	-	0,8	FCS3DIP563#Δ++B570BE3
	0,068	2 500	170	32	22	13	27,5	-/5,1/10,2	0,8	FCS3DIP683#Δ++I79$BE3
	0,082	2 500	205	32	24,5	13	27,5	-/5,1/10,2	0,8	FCS3DIP823#Δ++I89$BE3
	0,10	2 500	250	32	28	14	27,5	-/5,1/10,2	0,8	FCS3DIP104#Δ++IC9$BE3
	0,12	2 500	300	32	33	18	27,5	-/5,1/10,2/12,7	0,8	FCS3DIP124#Δ++IF9$BE3
	0,15	2 500	375	32	33	18	27,5	-/5,1/10,2/12,7	0,8	FCS3DIP154#Δ++IF9$BE3
	0,18	2 500	450	32	37	22	27,5	-/5,1/10,2/12,7	0,8	FCS3DIP184#Δ++II9$BE3
	0,22	2 500	550	32	37	22	27,5	-/5,1/10,2/12,7	0,8	FCS3DIP224#Δ++II9$BE3

(1) Maximum permissible peak current

125°C Snubber Capacitors:

Please contact our Sales Office team.
Jianghai Europe Electronic Components GmbH
Tel.: 0049 (0) 21 51 / 65 20 88-0
info@jianghai-europe.com

FEATURES

- Very high dV/dt
- High peak pulse capability
- Design for Snubber Application
- Self-healing
- High frequency application
- Soldering Terminal

OVERVIEW

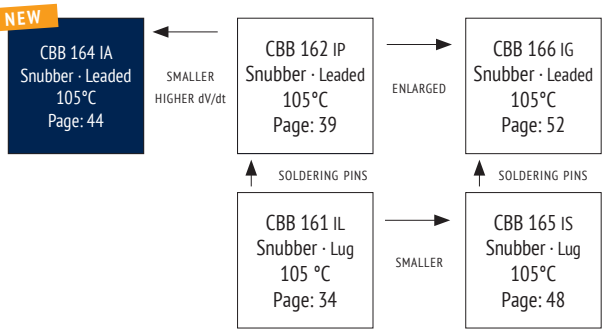

PRODUCT

APPLICATIONS

- High pulse and high frequency circuits
- IGBT applications

CHARACTERISTICS

ITEM	CHARACTERISTICS
Climatic Category	40/105/56 (IEC 61071)
Operating Temperature	−40 ~ +105°C ($\Theta_{hotspot}$ ⩽ 105°C) $\Theta_{hotspot}$ = 85~105°C: See Voltage Derating Diagram
Storage Temperature	−40 ~ +105°C
Rated Voltage U_{RDC}	1 000 ~ 2 000V_{DC}
Capacitance Range	0,001 ~ 0,082µF
Capacitance Tolerance	±10% (K), ±5% (J)
Voltage between Terminals U_{TT}	1,5 * U_{RDC} (20°C, 10s)
Voltage between Terminals & Case U_{TC}	⩾ 2 000 V_{AC} (20°C, 50Hz, 10s)
Capacitor Dissipation Factor tan ∂	⩽ 5 * 10^{-4} (20°C, 1kHz)
Dielectric Dissipation Factor tan ∂_0	⩽ 2 * 10^{-4} (20°C, 1kHz)
Insulation Resistance R_i	R_i ⩾ 100 000MΩ (20°C, 100V_{DC}, 1min)
Max. Overvoltage	Please see IEC 61071
Life Time Expectancy	⩾ 100 000h, failure rate ⩽ 100 FIT (70°C)
Reference Standard	IEC 61071:2007

ENVIRONMENTAL

The products are RoHS, WEEE and REACh compliant.

The detailed version please see seperate "Environmental Certificates" document or www.jianghai-europe.com

APPROVALS

UL94-V0:

Plastic & Compound Mass

LIFETIME

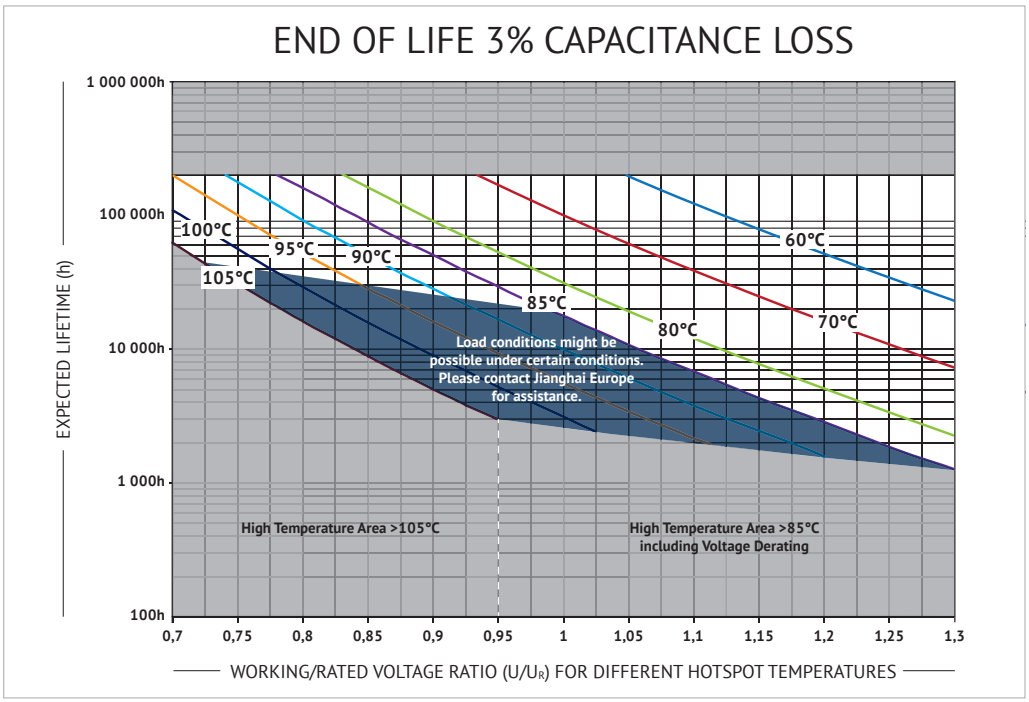

VOLTAGE DERATING

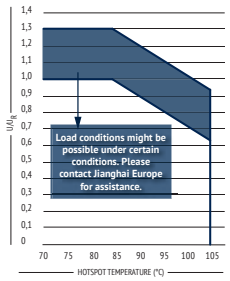

SNUBBER

DIMENSIONS

4 PIN TYPE

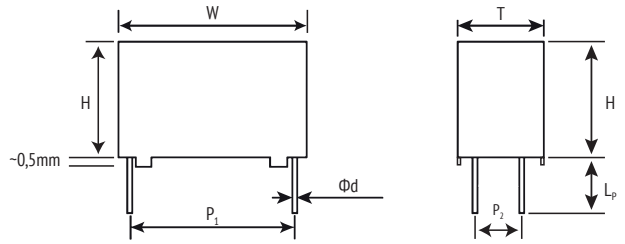

2 PIN TYPE

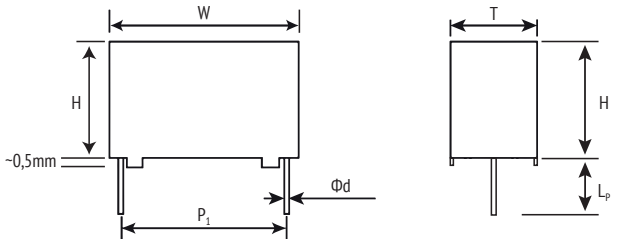

Lp = 5,0 ±1mm · other styles on request

INTERNAL CONSTRUCTION (EXAMPLE)

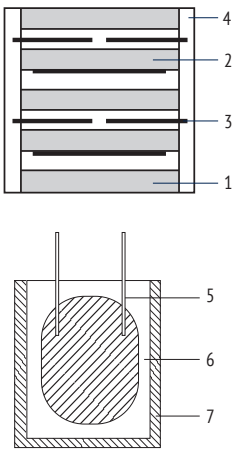

NO.	ITEM	MATERIAL
1	Dielectric Film	Polypropylene
2	Single-sided Metallized Film	PP + Al
3	Metal Foil	Al
4	Metal Sprayed Contact	Zn + Sn/Zn
5	Terminal	Sn-coated Cu
6	Potting Compound	Epoxy
7	Case	Flame retardant PBT/PPS

MARKING

CBB 164
1µF K 1200V
G08F45

BRAND
PRODUCT SERIES
CAPACITANCE, TOLERANCE AND RATETD VOLTAGE
DATE CODE

ORDER CODE

FC	S	3B	IA	105	K	0	50	FA	9	0	B	E 3
Capacitor type	Product shape	DC rated voltage code (V)	Series code	Capacitance Code (µF)	Capacitance tolerance	Pin Style (mm)	Pin Length (mm)	Dimension Code (mm) W x H x T ±1,0 ±1,0 ±1,0	Pitch P_1 (mm)	Pitch P_2 (mm)	Leadwire Diameter Ød	For internal use
Film Cap. = **FC**	Square box = **S**	630 **J2**	CBB 164 = **IA**	0,0010 **102**	±5% **J**	2 Pin, straight leads cut **0**	long leads **00**	13 x 11 x 5 **C4**	10,0 **3**	- **0**	0,6 **A**	
		1000 **3A**		0,0015 **152**	±10% **K**	2 Pin, long leads **1**	3,0 **30**	13 x 12 x 6 **C5**	15,0 **5**	5,1 **1**	0,8 **B**	
		1200 **3B**		0,047 **473**		4 Pin, straight leads cut **2**	3,2 **32**	13 x 13 x 7 **C8**	22,5 **7**	10,2 **3**		
		1600 **3C**		0,68 **684**			3,5 **35**	18 x 11 x 5 **E2**	27,5 **9**	12,7 **4**		
		2000 **3D**		0,82 **824**			5,0 **50**	18 x 12 x 6 **E5**				
				1,0 **105**			6,0 **60**	18 x 13,5 x 7,5 **E7**				
				1,2 **125**			13,0 **A0**	18 x 14,5 x 8,5 **E8**				
							15 **A1**	18 x 16 x 10 **EC**				
							17,5 **A2**	18 x 19 x 11 **EG**				
								26,5 x 16,5 x 7 **B2**				
								26,5 x 17 x 8,5 **B3**				
								26,5 x 19 x 10 **B4**				
								26,5 x 20 x 11 **B5**				
								26,5 x 23 x 13 **B6**				
								32 x 20 x 11 **I4**				
								32 x 22 x 13 **I7**				
								32 x 24,5 x 13 **I8**				
								32 x 28 x 14 **IC**				
								32 x 33 x 18 **IF**				
								32 x 37 x 22 **II**				

SNUBBER

SNUBBER

U_R ≤85°C (V)	C_R (nF)	dV/dt (V/µs)	Î (1) (A)	W +1/-1,5 (mm)	H +1/-1,5 (mm)	T +1/-1,5 (mm)	P_1 ±0,5 (mm)	P_2 ±0,5 (mm)	ød ±0,05 (mm)	ORDER CODE # = Tolerance · Δ = Pin Style ++ = Pin Length · $ = Pitch P2
1000 3A	3,3	28 000	92	18	11	5	15	-	0,8	FCS3AIA332#Δ++E250$BE3
	3,9	28 000	109	18	11	5	15	-	0,8	FCS3AIA392#Δ++E250$BE3
	4,7	28 000	131	18	11	5	15	-	0,8	FCS3AIA472#Δ++E250$BE3
	5,6	28 000	156	18	11	5	15	-	0,8	FCS3AIA562#Δ++E250$BE3
	6,8	28 000	190	18	11	5	15	-	0,8	FCS3AIA682#Δ++E250$BE3
	8,2	28 000	229	18	11	5	15	-	0,8	FCS3AIA822#Δ++E250$BE3
	10	28 000	280	18	12	6	15	-	0,8	FCS3AIA103#Δ++E550$BE3
	12	28 000	336	18	12	6	15	-	0,8	FCS3AIA123#Δ++E550$BE3
	15	28 000	420	18	13,5	7,5	15	-	0,8	FCS3AIA153#Δ++E750$BE3
	18	28 000	504	18	14,5	8,5	15	-	0,8	FCS3AIA183#Δ++E850$BE3
	22	28 000	616	18	14,5	8,5	15	-	0,8	FCS3AIA223#Δ++E850$BE3
	27	28 000	756	18	16	10	15	-	0,8	FCS3AIA273#Δ++EC50$BE3
	33	11 000	363	26,5	16,5	7	22,5	-	0,8	FCS3AIA333#Δ++B270$BE3
	39	11 000	429	26,5	17	8,5	22,5	-	0,8	FCS3AIA393#Δ++B370$BE3
	47	11 000	517	26,5	19	10	22,5	-	0,8	FCS3AIA473#Δ++B470$BE3
	56	11 000	616	26,5	19	10	22,5	-	0,8	FCS3AIA563#Δ++B470$BE3
	68	11 000	748	26,5	20	11	22,5	-	0,8	FCS3AIA683#Δ++B570$BE3
1250 E3	2,2	30 000	66	18	11	5	15	-	0,8	FCSE3IA222#Δ++E250$BE3
	2,7	30 000	81	18	11	5	15	-	0,8	FCSE3IA272#Δ++E250$BE3
	3,3	30 000	99	18	12	6	15	-	0,8	FCSE3IA332#Δ++E550$BE3
	3,9	30 000	117	18	12	6	15	-	0,8	FCSE3IA392#Δ++E550$BE3
	4,7	30 000	141	18	13,5	7,5	15	-	0,8	FCSE3IA472#Δ++E750$BE3
	5,6	30 000	168	18	13,5	7,5	15	-	0,8	FCSE3IA562#Δ++E750$BE3
	6,8	30 000	204	18	14,5	8,5	15	-	0,8	FCSE3IA682#Δ++E850$BE3
	8,2	30 000	246	18	16	10	15	-	0,8	FCSE3IA822#Δ++EC50$BE3
	10	11 000	110	26,5	16,5	7	22,5	-	0,8	FCSE3IA103#Δ++B270$BE3
	12	11 000	132	26,5	16,5	7	22,5	-	0,8	FCSE3IA123#Δ++B270$BE3
	15	11 000	165	26,5	16,5	7	22,5	-	0,8	FCSE3IA153#Δ++B270$BE3
	18	11 000	198	26,5	16,5	7	22,5	-	0,8	FCSE3IA183#Δ++B270$BE3
	22	11 000	242	26,5	17	8,5	22,5	-	0,8	FCSE3IA223#Δ++B370$BE3
	27	11 000	297	26,5	19	10	22,5	-	0,8	FCSE3IA273#Δ++B470$BE3
	33	11 000	363	26,5	19	10	22,5	-	0,8	FCSE3IA333#Δ++B470$BE3
	39	11 000	429	32	18	9	27,5	-	0,8	FCSE3IA393#Δ++I190$BE3
	47	11 000	517	32	20	11	27,5	-	0,8	FCSE3IA473#Δ++I490$BE3
	56	11 000	616	32	20	11	27,5	-	0,8	FCSE3IA563#Δ++I490$BE3
	68	11 000	748	32	22	13	27,5	-	0,8	FCSE3IA683#Δ++I790$BE3
	82	11 000	902	32	24,5	13	27,5	-	0,8	FCSE3IA822#Δ++I890$BE3
1600 3C	1,0	34 000	34	18	11	5	15	-	0,8	FCS3CIA102#Δ++E250$BE3
	1,2	34 000	40	18	11	5	15	-	0,8	FCS3CIA122#Δ++E250$BE3
	1,5	34 000	51	18	11	5	15	-	0,8	FCS3CIA152#Δ++E250$BE3
	1,8	34 000	61	18	11	5	15	-	0,8	FCS3CIA182#Δ++E250$BE3
	2,2	34 000	74	18	12	6	15	-	0,8	FCS3CIA222#Δ++E550$BE3
	2,7	34 000	91	18	12	6	15	-	0,8	FCS3CIA272#Δ++E550$BE3
	3,3	34 000	112	18	13,5	7,5	15	-	0,8	FCS3CIA332#Δ++E750$BE3
	3,9	34 000	132	18	13,5	7,5	15	-	0,8	FCS3CIA392#Δ++E750$BE3
	4,7	34 000	159	18	14,5	8,5	15	-	0,8	FCS3CIA472#Δ++E850$BE3
	5,6	34 000	190	18	16	10	15	-	0,8	FCS3CIA562#Δ++EC50$BE3
	6,8	34 000	231	18	16	10	15	-	0,8	FCS3CIA682#Δ++EC50$BE3
	8,2	11 000	90	26,5	16,5	7	22,5	-	0,8	FCS3CIA822#Δ++B270$BE3
	10	11 000	110	26,5	16,5	7	22,5	-	0,8	FCS3CIA103#Δ++B270$BE3

(1) Maximum permissible peak current

U_R ≤85°C (V)	C_R (nF)	dV/dt (V/µs)	Î (1) (A)	W +1/-1,5 (mm)	H +1/-1,5 (mm)	T +1/-1,5 (mm)	P_1 ±0,5 (mm)	P_2 ±0,5 (mm)	ød ±0,05 (mm)	ORDER CODE # = Tolerance · Δ = Pin Style ++ = Pin Length · $ = Pitch P2
1600 3C	12	11 000	132	26,5	16,5	7	22,5	-	0,8	FCS3CIA123#Δ++B270$BE3
	15	11 000	165	26,5	17	8,5	22,5	-	0,8	FCS3CIA153#Δ++B370$BE3
	18	11 000	198	26,5	17	8,5	22,5	-	0,8	FCS3CIA183#Δ++B370$BE3
	22	11 000	242	26,5	19	10	22,5	-	0,8	FCS3CIA223#Δ++B470$BE3
	27	11 000	297	32	18	9	27,5	-	0,8	FCS3CIA273#Δ++I190$BE3
	33	11 000	363	32	20	11	27,5	-	0,8	FCS3CIA333#Δ++I490$BE3
	39	11 000	429	32	20	11	27,5	-	0,8	FCS3CIA393#Δ++I490$BE3
	47	11 000	517	32	22	13	27,5	-	0,8	FCS3CIA473#Δ++I790$BE3
	56	11 000	616	32	22	13	27,5	-	0,8	FCS3CIA563#Δ++I790$BE3
2000 3D	1	54 000	54	18	12	6	15	-	0,8	FCS3DIA102#Δ++E550$BE3
	1,2	54 000	65	18	12	6	15	-	0,8	FCS3DIA122#Δ++E550$BE3
	1,5	54 000	81	18	13,5	7,5	15	-	0,8	FCS3DIA152#Δ++E750$BE3
	1,8	34 000	61	18	13,5	7,5	15	-	0,8	FCS3DIA182#Δ++E750$BE3
	2,2	34 000	75	18	14,5	8,5	15	-	0,8	FCS3DIA222#Δ++E850$BE3
	2,7	34 000	92	18	16	10	15	-	0,8	FCS3DIA272#Δ++EC50$BE3
	3,3	11 000	36	26,5	16,5	7	22,5	-	0,8	FCS3DIA332#Δ++B270$BE3
	3,9	11 000	42	26,5	16,5	7	22,5	-	0,8	FCS3DIA392#Δ++B270$BE3
	4,7	11 000	51	26,5	16,5	7	22,5	-	0,8	FCS3DIA472#Δ++B270$BE3
	5,6	11 000	61	26,5	16,5	7	22,5	-	0,8	FCS3DIA562#Δ++B270$BE3
	6,8	11 000	74	26,5	17	8,5	22,5	-	0,8	FCS3DIA682#Δ++B370$BE3
	8,2	11 000	90	26,5	17	8,5	22,5	-	0,8	FCS3DIA822#Δ++B370$BE3
	10	11 000	110	26,5	19	10	22,5	-	0,8	FCS3DIA103#Δ++B470$BE3
	12	11 000	132	26,5	20	11	22,5	-	0,8	FCS3DIA123#Δ++B570$BE3
	15	11 000	165	32	20	11	27,5	-	0,8	FCS3DIA153#Δ++I490$BE3
	18	11 000	198	32	22	13	27,5	-	0,8	FCS3DIA183#Δ++I790$BE3
	22	11 000	242	32	22	13	27,5	-	0,8	FCS3DIA223#Δ++I790$BE3

(1) Maximum permissible peak current

FEATURES

- Very low dissipation factor
- High peak pulse capability
- Plates for direct IGBT connection
- Self-healing
- 105°C

OVERVIEW

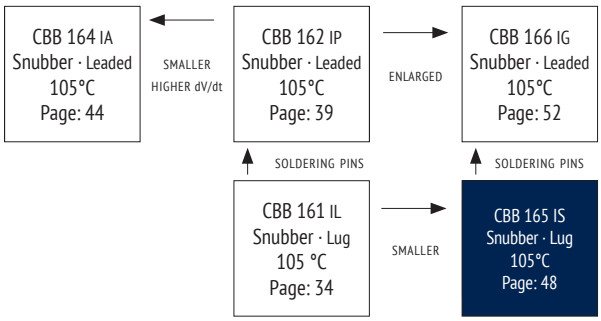

PRODUCT

APPLICATIONS

- High pulse and high frequency circuits

CHARACTERISTICS

ITEM	CHARACTERISTICS
Climatic Category	40/105/56 (IEC 61071)
Operating Temperature	−40 ~ +105°C ($\Theta_{hotspot}$ ⩽ 105 °C) $\Theta_{hotspot}$ = 85~105°C: See Voltage Derating Diagram
Storage Temperature	−40 ~ +105°C
Rated Voltage U_{RDC}	630 ~ 2 000V_{DC}
Capacitance Range	0,001 ~ 1,8µF
Capacitance Tolerance	±10% (K), ±5% (J)
Voltage between Terminals U_{TT}	1,5 * U_{RDC} (20°C, 10s)
Voltage between Terminals & Case U_{TC}	⩾ 3 000V_{AC} (20°C, 50Hz, 10s)
Capacitor Dissipation Factor tan ∂	⩽ 10 * 10^{-4} (20°C, 1kHz)
Dielectric Dissipation Factor tan ∂_o	⩽ 2 * 10^{-4} (20°C, 1kHz)
Insulation Resistance R_i*C_R	C_R ⩽ 0,33µF: R_i ⩾ 100 000MΩ C_R > 0,33µF: R_i*C_R ⩾ 30 000MΩ*µF (20°C, 100V_{DC}, 1 min)
Max. Overvoltage	Please see IEC 61071
Life Time Expectancy	⩾ 100 000h, failure rate ⩽ 100 FIT (70°C)
Reference Standard	IEC 61071:2007

ENVIRONMENTAL

The products are RoHS, WEEE and REACh compliant.

The detailed version please see seperate "Environmental Certificates" document or www.jianghai-europe.com

APPROVALS

UL94-V0:

Plastic & Compound Mass

LIFETIME

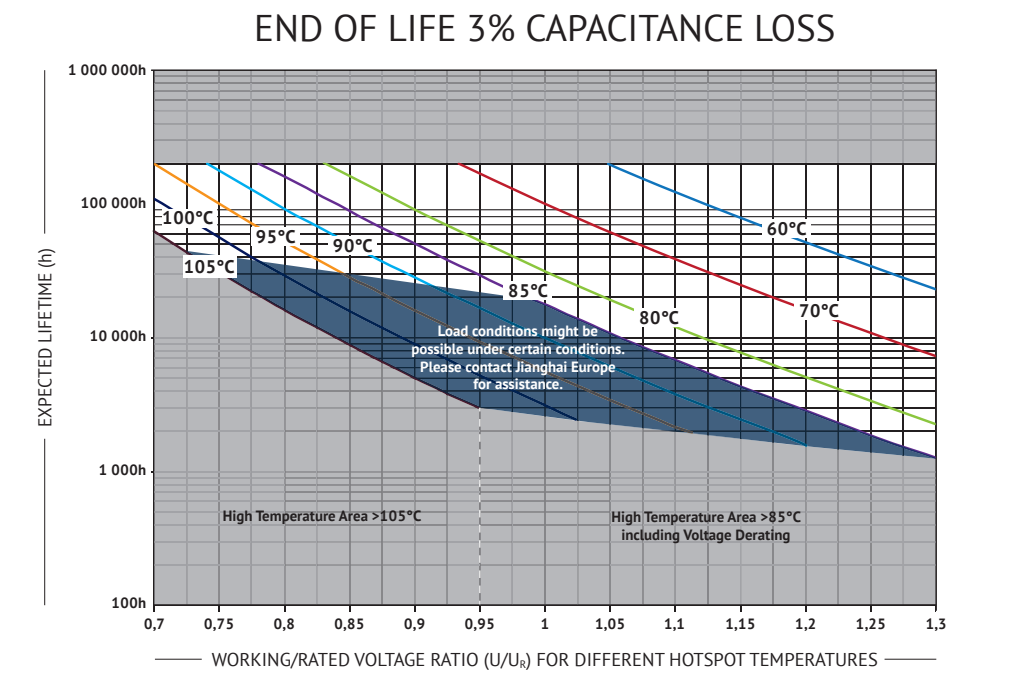

CURRENT DERATING

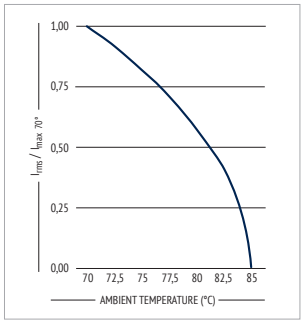

VOLTAGE DERATING

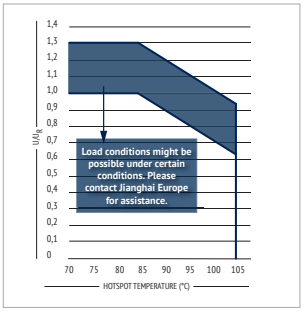

SNUBBER

DIMENSIONS

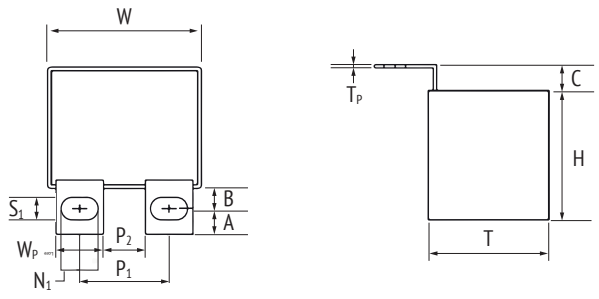

STYLE A

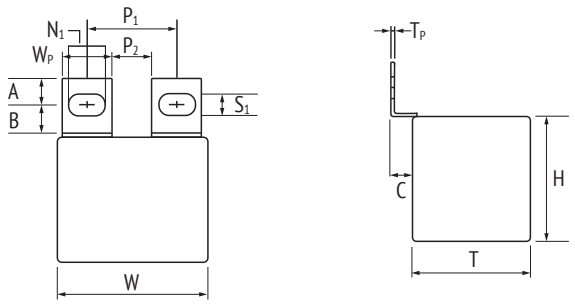

STYLE B

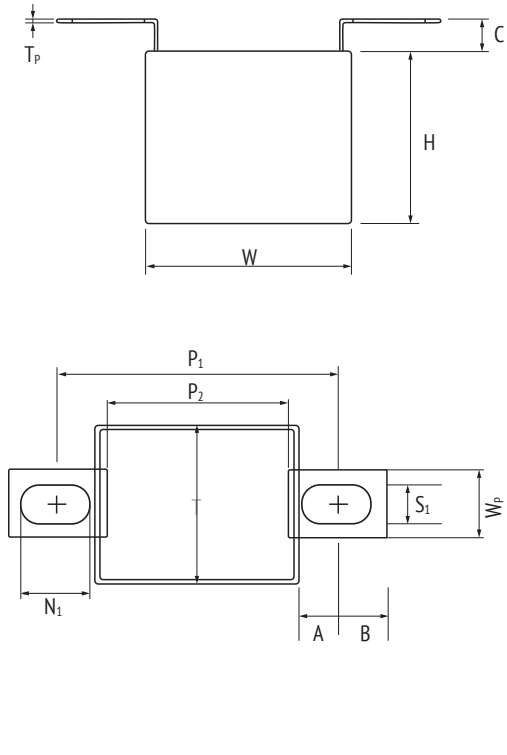

STYLE C

Terminal Style	Length of Case W+1/-1,5 (mm)	Mounting Hole Pitch P1±0,5 (mm)	Gap between Terminals P_2±0,5 (mm)	Width Terminal Plate W_P±0,3 (mm)	Thickness Terminal T_P±0,1 (mm)	Distance of Terminal C±1 (mm)	Width of Hole S_1±0,1 (mm)	Length of Hole N_1±0,3 (mm)	Position of Hole A±0,2 (mm)	Distance of Hole B±0,2 (mm)
Style A/B	42,5	24,0	10,0	14,0	1,0	6,0	M6: 6,5 M8: 8,5	M6: 8,5 M8: 10,5	7,0	7,0
Style A/B	42,5	26,0	12,0	14,0	1,0	6,0	M6: 6,5 M8: 8,5	M6: 8,5 M8: 10,5	7,0	7,0
Style A/B	57,5	24,0	10,0	14,0	1,0	6,0	M6: 6,5 M8: 8,5	M6: 8,5 M8: 10,5	7,0	7,0
Style A/B	57,5	37,0	23,0	14,0	1,0	6,0	M6: 6,5 M8: 8,5	M6: 8,5 M8: 10,5	7,0	7,0
Style C	42,5	60,0	38,0	14,0	1,0	6,0	M8: 8,2	M8: 14	8,5	10,0
Style C	57,5	75,0	53,0	14,0	1,0	6,0	M8: 8,2	M8: 14	8,5	10,0

INTERNAL CONSTRUCTION (EXAMPLE)

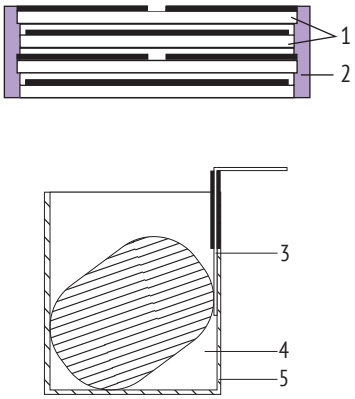

NO.	ITEM	MATERIAL
1	Single-sided Metallized Film	PP + Al
2	Metal Sprayed Contact	Zn + Sn/Zn
3	Terminal	Sn-coated Cu
4	Potting Compound	Epoxy
5	Case	Flame retardant PBT/PPS

MARKING

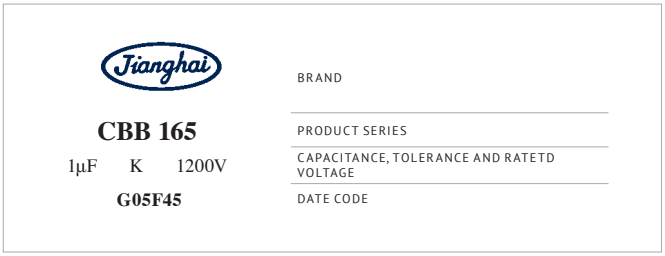

ORDER CODE

FC	S	3B	IS	105	K	A	FA	60	12	16	1	E 3
Capacitor type	Product shape	DC rated voltage code (V)	Series code	Capacitance Code (μF)	Capacitance tolerance	Plate Style (mm)	Dimension Code (mm)	Pitch P_1 (mm)	Gap P_2 (mm)	Width of plates Wp (mm)	Hole Shape	For internal use
Film Cap. = **FC**	Square box = **S**	850 **K2**	CBB 165 = **IS**	0,22 **224**	±5% **J**	Style A **A**	42,5 x 28 x 24 **FA**	24 **24**	10 **10**	14 **14**	Circular M6 **0**	
		1000 **3A**		0,33 **334**	±10% **K**	Style B **B**	42,5 x 33 x 33 **FB**	26 **26**	12 **12**		Oval M6: 6,5x8,5 **1**	
		1200 **3B**		0,47 **474**		Style C **C**	42,5 x 35,5 x 33,5 **FC**	37 **37**	23 **23**		Circular M8 **2**	
		1600 **3C**		0,68 **684**			42,5 x 36 x 24 **FD**	60 **60**	38 **38**		Oval M8: 8,5x10,5 **3**	
		2000 **3D**		0,82 **824**			42,5 x 43 x 42 **FE**	75 **75**	53 **53**		Oval M6: 6,5x10,5 **7**	
				1,0 **105**			42,5 x 45 x 30 **FF**				Oval 9x12 **5**	
				1,2 **125**			57,5 x 43,5 x 29,5 **HG**				Circular ø5,5 **A**	
				1,5 **155**			57,5 x 45 x 30 **HH**				Circular ø7,0 **C**	
				2,0 **205**			57,5 x 45 x 35 **HJ**				Circular ø5,0 **E**	
				2,2 **225**			57,5 x 45 x 45 **HK**				Oval 8,5x14,5 **D**	
				2,5 **255**			57,5 x 50 x 35 **HL**					
				3,0 **305**			57,5 x 55 x 40 **HM**					
				3,3 **335**								
				4,0 **405**								
				4,7 **475**								
				5,0 **505**								
				6,0 **605**								
				6,8 **685**								
				10,0 **106**								

RATINGS

U_R ≤85°C (V)	C_R (µF)	dV/dt 20°C (V/µs)	$\hat{I}$ (1) (A)	ESR_{typ} 20°C 100kHz (mΩ)	L_S 20°C (nH)	I_{max} 70°C 100kHz (A)	W +1/-1,5 (mm)	H +1/-1,5 (mm)	T +1/-1,5 (mm)	ORDER CODE "#" to be defined, see ordering code table
850 V_{DC} 450 V_{AC} K2	1,20	375	450	10	≤30	11,8	42,5	28	24	FCSK2IS125##FA####14#E3
	2,00	375	750	9	≤30	15,6	42,5	36	24	FCSK2IS205##FD####14#E3
	2,50	375	937	8	≤30	17,6	42,5	35,5	33,5	FCSK2IS255##FC####14#E3
	2,80	375	1050	7	≤30	19,8	42,5	35,5	33,5	FCSK2IS285##FC####14#E3
	3,30	375	1237	6	≤30	21,5	42,5	45	30	FCSK2IS335##FF####14#E3
	4,00	375	1500	5	≤30	24,0	42,5	43	42	FCSK2IS405##FE####14#E3
	4,50	225	1012	5	≤35	24,0	57,5	43,5	29,5	FCSK2IS455##HG####14#E3
	4,80	225	1080	4	≤35	25,0	57,5	45	30	FCSK2IS485##HH####14#E3
	5,50	225	1237	4	≤35	25,0	57,5	45	35	FCSK2IS555##HJ####14#E3
	6,50	225	1462	3	≤35	26,0	57,5	50	35	FCSK2IS655##HL####14#E3
	7,00	225	1575	3	≤35	26,0	57,5	45	45	FCSK2IS705##HK####14#E3
	8,00	225	1800	3	≤35	29,0	57,5	55	40	FCSK2IS805##HM####14#E3
1000 V_{DC} 500 V_{AC} 3A	1,00	425	425	10	≤30	11,6	42,5	28	24	FCS3AIS105##FA####14#E3
	1,50	425	637	9	≤30	15,5	42,5	36	24	FCS3AIS155##FD####14#E3
	1,80	425	765	8	≤30	17,5	42,5	35,5	33,5	FCS3AIS185##FC####14#E3
	2,00	425	850	7	≤30	18,8	42,5	35,5	33,5	FCS3AIS205##FC####14#E3
	2,50	425	1062	6	≤30	21,0	42,5	45	30	FCS3AIS255##FF####14#E3
	3,00	425	1275	5	≤30	23,0	42,5	43	42	FCS3AIS305##FE####14#E3
	3,30	250	825	6	≤35	23,0	57,5	43,5	29,5	FCS3AIS335##HG####14#E3
	3,50	250	875	5	≤35	24,0	57,5	45	30	FCS3AIS355##HH####14#E3
	4,20	250	1050	5	≤35	24,0	57,5	45	35	FCS3AIS425##HJ####14#E3
	4,80	250	1200	4	≤35	25,0	57,5	50	35	FCS3AIS485##HL####14#E3
	5,00	250	1250	4	≤35	25,0	57,5	45	45	FCS3AIS505##HK####14#E3
	6,00	250	1500	4	≤35	28,0	57,5	55	40	FCS3AIS605##HM####14#E3
1200 V_{DC} 600 V_{AC} 3B	0,68	475	323	10	≤30	11,5	42,5	28	24	FCS3BIS684##FA####14#E3
	1,00	475	475	10	≤30	15,4	42,5	36	24	FCS3BIS105##FD####14#E3
	1,30	475	617	8	≤30	18,6	42,5	35,5	33,5	FCS3BIS135##FC####14#E3
	1,60	475	760	7	≤30	20,6	42,5	45	30	FCS3BIS165##FF####14#E3
	2,00	475	950	7	≤30	22,0	42,5	43	42	FCS3BIS205##FE####14#E3
	2,20	300	660	6	≤35	22,0	57,5	43,5	29,5	FCS3BIS225##HG####14#E3
	2,50	300	750	6	≤35	23,0	57,5	45	30	FCS3BIS255##HH####14#E3
	2,80	300	840	6	≤35	24,0	57,5	45	35	FCS3BIS285##HJ####14#E3
	3,30	300	990	5	≤35	24,0	57,5	50	35	FCS3BIS335##HL####14#E3
	3,50	300	1050	5	≤35	25,0	57,5	45	45	FCS3BIS355##HK####14#E3
	4,00	300	1200	5	≤35	26,0	57,5	55	40	FCS3BIS405##HM####14#E3
1600 V_{DC} 650 V_{AC} 3C	0,45	625	281	11	≤30	11,4	42,5	28	24	FCS3CIS454##FA####14#E3
	0,60	625	375	10	≤30	15,2	42,5	36	24	FCS3CIS604##FD####14#E3
	0,70	625	437	10	≤30	17,0	42,5	35,5	33,5	FCS3CIS704##FC####14#E3
	0,85	625	531	9	≤30	18,4	42,5	35,5	33,5	FCS3CIS854##FC####14#E3
	1,00	625	625	8	≤30	20,5	42,5	45	30	FCS3CIS105##FF####14#E3
	1,30	625	812	7	≤30	21,0	42,5	43	42	FCS3CIS135##FE####14#E3
	1,50	375	562	6	≤35	22,0	57,5	43,5	29,5	FCS3CIS155##HG####14#E3
	1,60	375	600	6	≤35	22,0	57,5	45	30	FCS3CIS165##HH####14#E3
	1,80	375	675	5	≤35	23,0	57,5	45	35	FCS3CIS185##HJ####14#E3
	2,00	375	750	5	≤35	24,0	57,5	50	35	FCS3CIS205##HL####14#E3
	2,20	375	825	4	≤35	24,0	57,5	45	45	FCS3CIS225##HK####14#E3
	2,50	375	937	4	≤35	25,0	57,5	55	40	FCS3CIS255##HM####14#E3
2000 V_{DC} 700 V_{AC} 3D	1,00	425	425	5	≤35	22,0	57,5	43,5	29,5	FCS3DIS105##HG####14#E3
	1,10	425	467	5	≤35	23,0	57,5	45	30	FCS3DIS115##HH####14#E3
	1,30	425	552	4	≤35	23,0	57,5	45	35	FCS3DIS135##HJ####14#E3
	1,50	425	637	4	≤35	24,0	57,5	50	35	FCS3DIS155##HL####14#E3
	1,70	425	722	4	≤35	25,0	57,5	45	45	FCS3DIS175##HK####14#E3
	1,90	425	807	3	≤35	25,0	57,5	55	40	FCS3DIS195##HM####14#E3

(1) Maximum permissible peak current

SNUBBER

FEATURES

- Very low dissipation factor
- Highest peak pulse capability
- Design for Snubber Application
- Self-healing
- Soldering Terminal

OVERVIEW

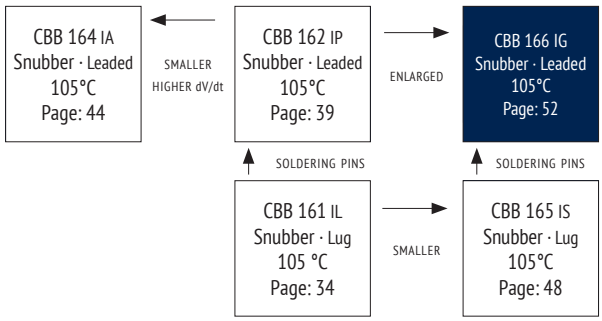

PRODUCT

APPLICATIONS

- High pulse and high frequency circuits
- IGBT applications

CHARACTERISTICS

ITEM	CHARACTERISTICS
Climatic Category	40/105/56 (IEC 61071)
Operating Temperature	–40 ~ +105°C ($\Theta_{hotspot}$ ≤ 10°C) $\Theta_{hotspot}$ = 85~105°C: See Voltage Derating Diagram
Storage Temperature	–40 ~ +105°C
Rated Voltage U_{RDC}	630 ~ 2 000V_{DC}
Capacitance Range	0,001 ~ 1,8µF
Capacitance Tolerance	±10% (K), ±5% (J)
Voltage between Terminals U_{TT}	1,5 * U_{RDC} (20°C, 10s)
Voltage between Terminals & Case U_{TC}	≥ 3 000V_{AC} (20°C, 50Hz, 10s)
Capacitor Dissipation Factor tan ∂	≤ 10 * 10^{-4} (20°C, 1kHz)
Dielectric Dissipation Factor tan ∂_o	≤ 2 * 10^{-4} (20°C, 1kHz)
Insulation Resistance R_i*C_R	C_R ≤ 0,33µF: R_i ≥ 100 000MΩ C_R > 0,33µF: R_i*C_R ≥ 30 000MΩ*µF (20°C, 100 V_{DC}, 1min)
Max. Overvoltage	Please see IEC 61071
Life Time Expectancy	≥ 100 000h, failure rate ≤ 100 FIT (70°C)
Reference Standard	IEC 61071:2007

ENVIRONMENTAL

The products are RoHS, WEEE and REACh compliant.

The detailed version please see seperate "Environmental Certificates" document or www.jianghai-europe.com

APPROVALS

UL94-V0:

Plastic & Compound Mass

LIFETIME

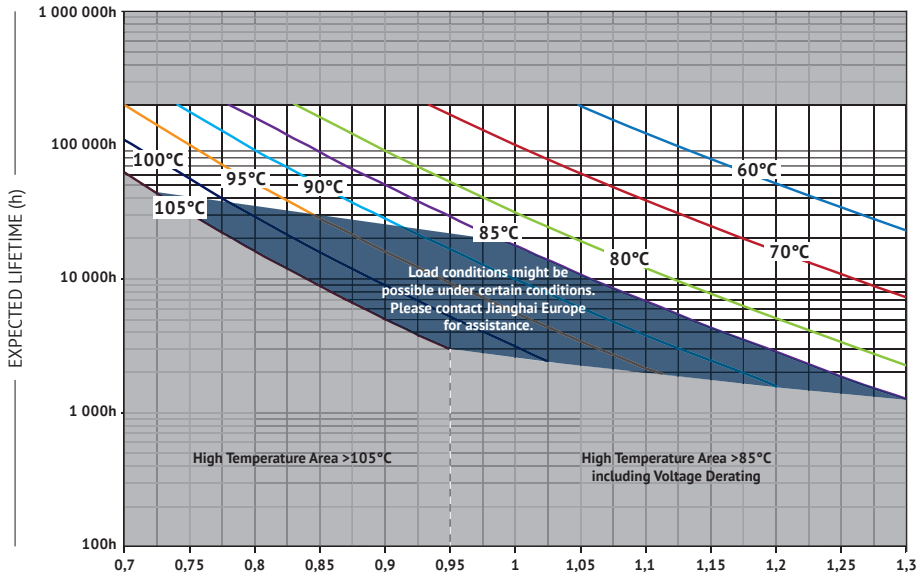

CURRENT DERATING

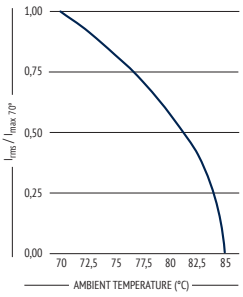

VOLTAGE DERATING

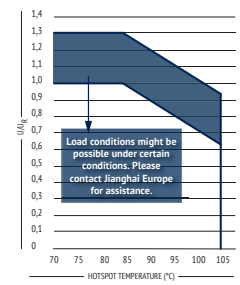

SNUBBER

DIMENSIONS

4 PIN TYPE

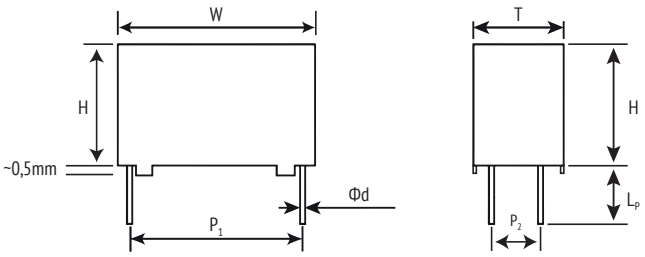

2 PIN TYPE

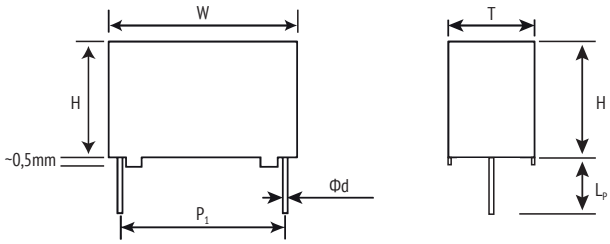

Lp = 5,0 ±1mm · other styles on request

INTERNAL CONSTRUCTION (EXAMPLE)

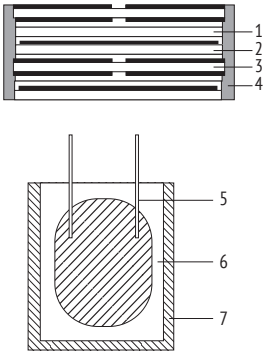

NO.	ITEM	MATERIAL
1	Dielectric Film	Polypropylene
2	Single-sided Metallized Film	PP + Al
3	Double-sided Metallized Carrier Film	PET + Al
4	Metal Sprayed Contact	Zn + Sn/Zn
5	Terminal	Sn-coated Cu
6	Potting Compound	Epoxy
7	Case	Flame retardant PBT/PPS

MARKING

CBB 166

1µF J 1200V

J08F15

BRAND

PRODUCT SERIES

CAPACITANCE, TOLERANCE AND RATETD VOLTAGE

DATE CODE

ORDER CODE

FC	S	3B		IG	105		K		0		50		F2		9		0		C		E 3
Capacitor type	Product shape	DC rated voltage code (V)		Series code	Capacitance Code (µF)		Capacitance tolerance		Pin Style (mm)		Pin Length (mm)		Dimension Code (mm) W x H x T ±1,0 ±1,0 ±1,0		Pitch P_1 (mm)		Pitch P_2 (mm)		Leadwire Diameter Ød		For internal use
Film Cap. = **FC**	Square box = **S**	850	**K2**	CBB 166 = **IG**	0,047	**473**	±5%	**J**	2 Pin, straight leads cut	**0**	long leads	**00**	32 x 20 x 11	**I4**	27,5	**9**	10,2	**3**	0,8	**B**	
		1000	**3A**		0,68	**684**	±10%	**K**	2 Pin, long leads	**1**	3,0	**30**	32 x 22 x 13	**I7**	37,5	**C**	20,3	**9**	1,0	**C**	
		1200	**3B**		0,82	**824**			4 Pin, straight leads cut	**2**	3,2	**32**	32 x 24,5 x 13	**I8**	52,5	**F**	-	**0**	1,2	**D**	
		1600	**3C**		1,0	**105**					3,5	**35**	32 x 28 x 14	**IC**							
		2000	**3D**		1,2	**125**					5,0	**50**	32 x 33 x 18	**IF**							
											6,0	**60**	32 x 37 x 22	**II**							
											13,0	**A0**	42,5 x 37 x 28	**F1**							
											15	**A1**	42,5 x 40 x 20	**F2**							
											17,5	**A2**	42,5 x 32 x 19	**F5**							
													42,5 x 44 x 24	**F9**							
													42,5 x 45 x 30	**FF**							
													57,5 x 45 x 30	**HH**							
													57,5 x 50 x 35	**HL**							

SNUBBER

RATINGS

U_R ≤85°C (V)	C_R (µF)	I_{max} 70°C, 100kHz (A)	Î (1) (A)	ESR_{typ} 20°C, 100kHz (mΩ)	dV/dt (V/µs)	$L_{S_{typ}}$ 20°C (nH)	W +1/-1,5 (mm)	H +1/-1,5 (mm)	T +1/-1,5 (mm)	P_1 ±0,5 (mm)	P_2 ±0,5 (mm)	ød ±0,05 (mm)	ORDER CODE "#" to be defined, see ordering code table
850 V_{DC} 450 V_{AC} K2	0,15	8,0	195	14,5	1300	24	32	20	11	27,5	\	0,8	FCSK2IG154####I490BE3
	0,22	10,0	286	10,5	1300	24	32	22	13	27,5	\	0,8	FCSK2IG224####I790BE3
	0,33	13,0	429	7,6	1300	26	32	28	14	27,5	\	0,8	FCSK2IG334####IC90BE3
	0,47	14,0	611	5,8	1300	26	32	33	18	27,5	\	0,8	FCSK2IG474####IF90BE3
	0,68	16,0	884	4,6	1300	28	32	37	22	27,5	\	0,8	FCSK2IG684####II90BE3
	1,0	22,0	800	5,9	800	30	42,5	40	20	37,5	10,2	1	FCSK2IG105####F2C3CE3
	2,0	29,0	1 600	3,9	800	30	42,5	44	24	37,5	10,2	1	FCSK2IG205####F9C3CE3
	3,0	29,0	1 500	5	500	35	57,5	45	30	52,5	20,3	1,2	FCSK2IG305####HHF9DE3
	4,0	29,0	2 000	4,2	500	35	57,5	45	30	52,5	20,3	1,2	FCSK2IG405####HHF9DE3
	5,0	29,0	2 500	3,9	500	35	57,5	50	35	52,5	20,3	1,2	FCSK2IG505####HLF9DE3
1000 V_{DC} 500 V_{AC} 3A	0,15	8,0	210	14	1400	24	32	20	11	27,5	\	0,8	FCS3AIG154####I490BE3
	0,22	9,0	308	9,9	1400	24	32	22	13	27,5	\	0,8	FCS3AIG224####I790BE3
	0,33	10,0	462	7,2	1400	26	32	28	14	27,5	\	0,8	FCS3AIG334####IC90BE3
	0,47	12,0	658	5,6	1400	26	32	33	18	27,5	\	0,8	FCS3AIG474####IF90BE3
	0,68	14,0	612	4,4	900	28	32	37	22	27,5	\	0,8	FCS3AIG684####II90BE3
	1,0	16,0	900	5,5	900	30	42,5	40	20	37,5	10,2	1	FCS3AIG105####F2C3CE3
	1,5	16,0	1 350	4,2	900	30	42,5	37	28	37,5	10,2	1	FCS3AIG155####F1C3CE3
	2,0	18,0	1 800	3,7	900	30	42,5	45	30	37,5	20,3	1,2	FCS3AIG205####FFC9DE3
	2,2	18,0	1 980	3,6	900	30	42,5	45	30	37,5	20,3	1,2	FCS3AIG225####FFC9DE3
	3,0	20,0	1 650	4,7	550	35	57,5	45	30	52,5	20,3	1,2	FCS3AIG305####HHF9DE3
	4,0	22,0	2 200	4,2	550	35	57,5	50	35	52,5	20,3	1,2	FCS3AIG405####HLF9DE3
	4,7	24,0	2 585	3,9	550	35	57,5	50	35	52,5	20,3	1,2	FCS3AIG475####HLF9DE3
1200 V_{DC} 600 V_{AC} 3B	0,10	7,0	160	18,5	1600	24	32	20	11	27,5	\	0,8	FCS3BIG104####I490BE3
	0,15	10,0	240	12,8	1600	24	32	22	13	27,5	\	0,8	FCS3BIG154####I790BE3
	0,22	12,0	352	9,2	1600	26	32	28	14	27,5	\	0,8	FCS3BIG224####IC90BE3
	0,33	14,0	528	6,7	1600	26	32	33	18	27,5	\	0,8	FCS3BIG334####IF90BE3
	0,47	14,0	752	5,3	1600	28	32	37	22	27,5	\	0,8	FCS3BIG474####II90BE3
	0,68	16,0	680	6,6	1000	30	42,5	40	20	37,5	10,2	1	FCS3BIG684####F2C3CE3
	1,0	18,0	1 000	5,1	1000	30	42,5	40	20	37,5	10,2	1	FCS3BIG105####F2C3CE3
	1,2	18,0	1 200	4,4	1000	30	42,5	37	28	37,5	10,2	1	FCS3BIG125####F1C3CE3
	2,0	20,0	1 200	5,5	600	35	57,5	45	30	52,5	20,3	1,2	FCS3BIG205####HHF9DE3
	2,2	20,0	1 320	5,2	600	35	57,5	45	30	52,5	20,3	1,2	FCS3BIG225####HHF9DE3
	2,5	22,0	1 500	4,8	600	35	57,5	45	30	52,5	20,3	1,2	FCS3BIG255####HHF9DE3
	3,0	22,0	1 800	4,5	600	35	57,5	50	35	52,5	20,3	1,2	FCS3BIG305####HLF9DE3
	3,3	24,0	1 980	4,1	600	35	57,5	50	35	52,5	20,3	1,2	FCS3BIG335####HLF9DE3
1600 V_{DC} 650 V_{AC} 3C	0,10	8,0	190	13,5	1900	24	32	22	13	27,5	\	0,8	FCS3CIG104####I790BE3
	0,15	9,0	285	10,5	1900	24	32	24,5	13	27,5	\	0,8	FCS3CIG154####I890BE3
	0,18	10,0	342	9,5	1900	26	32	28	14	27,5	\	0,8	FCS3CIG184####IC90BE3
	0,22	12,0	418	8	1900	26	32	33	18	27,5	\	0,8	FCS3CIG224####IF90BE3
	0,27	14,0	513	7	1900	26	32	33	18	27,5	\	0,8	FCS3CIG274####IF90BE3
	0,33	15,0	627	6,8	1900	28	32	37	22	27,5	\	0,8	FCS3CIG334####II90BE3
	0,39	15,0	741	6,5	1900	28	32	37	22	27,5	\	0,8	FCS3CIG394####II90BE3
	0,47	16,0	588	6	1250	30	42,5	32	19	37,5	\	1	FCS3CIG474####F5C0CE3
	0,68	18,0	850	5	1250	30	42,5	40	20	37,5	10,2	1	FCS3CIG684####F2C3CE3
	0,82	18,0	1 025	5	1250	30	42,5	44	24	37,5	10,2	1	FCS3CIG824####F9C3CE3
	1,0	19,0	1 250	4,8	1250	30	42,5	45	30	37,5	20,3	1,2	FCS3CIG105####FFC9DE3
	1,2	19,0	1 500	4,8	1250	30	42,5	45	30	37,5	20,3	1,2	FCS3CIG125####FFC9DE3
	1,5	20,0	1 125	4,5	750	35	57,5	45	30	52,5	20,3	1,2	FCS3CIG155####HHF9DE3
	2,0	22,0	1 500	4,2	750	35	57,5	50	35	52,5	20,3	1,2	FCS3CIG205####HLF9DE3
2000 V_{DC} 700 V_{AC} 3D	0,033	5,0	76	42,5	2300	24	32	20	11	27,5	\	0,8	FCS3DIG333####I490BE3
	0,047	6,0	108	30,5	2300	24	32	20	11	27,5	\	0,8	FCS3DIG473####I490BE3
	0,068	8,0	156	20,8	2300	24	32	22	13	27,5	\	0,8	FCS3DIG683####I790BE3
	0,10	10,0	230	15,2	2300	26	32	28	14	27,5	\	0,8	FCS3DIG104####IC90BE3
	0,15	15,0	345	10,8	2300	26	32	33	18	27,5	\	0,8	FCS3DIG154####IF90BE3
	0,22	16,0	506	7,8	2300	26	32	33	18	27,5	\	0,8	FCS3DIG224####IF90BE3
	0,33	16,0	462	9,4	1400	30	42,5	40	20	37,5	10,2	1	FCS3DIG334####F2C3CE3
	0,47	18,0	658	8,3	1400	30	42,5	44	24	37,5	10,2	1	FCS3DIG474####F9C3CE3
	0,68	20,0	952	5,5	1400	30	42,5	45	30	37,5	20,3	1,2	FCS3DIG684####FFC9DE3
	1,0	22,0	850	7,3	850	35	57,5	45	30	52,5	20,3	1,2	FCS3DIG105####HHF9DE3
	1,5	24,0	1 275	5,6	850	35	57,5	50	35	52,5	20,3	1,2	FCS3DIG155####HLF9DE3

(1) Maximum permissible peak current.

SNUBBER

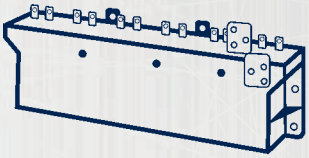

MODULES

SERIES	CODE	INFO	TEMPERATURE	TERMINAL	PAGE
CBB 133	DM		85°C	METAL HOUSING	**56**
CBB 135	DV		105°C	PLASTIC HOUSING	**59**

FEATURES

- Customer Specific Designs
- High ripple current capability
- Self-healing
- Long lifetime
- Metal Case, fire retardant resin

OVERVIEW

CBB 135 DV
Plastic housing
Page: 59

→

CBB 133 DM
Metal housing
Page: 56

PRODUCT

APPLICATIONS

- High power frequency converters
- Electric and hybrid electric vehicles, Traction and Trains

CHARACTERISTICS (PROPOSAL)

ITEM	CHARACTERISTICS
Climatic Category	40/85/56 (IEC 61071)
Operating Temperature	−40 ~ +70°C ($\Theta_{hotspot}$ ⩽ 85°C)
Storage Temperature	−40 ~ +85°C
Rated Voltage U_{RDC}	750 ~ 3 000V_{DC}
Capacitance Range	500 ~ 65 000µF
Capacitance Tolerance	±10% (K), ±5% (J)
Voltage between Terminals U_{TT}	1,5*U_{RDC} (20°C, 10s)
Voltage between Terminals & Case U_{TC}	⩾ 3 000V_{AC} (20°C, 50 Hz, 10s)
Max. Overvoltage	Please see IEC 61071
Insulation Resistance R_i*C	⩾ 10 000MΩ*µF (20°C, 100V_{DC}, 1min)
Dielectric Dissipation Factor tan ∂_o	⩽ 2 * 10^{-4} (20°C, 100Hz)
Life Time Expectancy	100 000h, failure rate ⩽ 100 FIT ($\Theta_{hotspot}$ ⩽ 70°C, U_{RDC})
Reference Standard	IEC 61071:2007

ENVIRONMENTAL

The products are RoHS, WEEE and REACh compliant.

The detailed version please see seperate "Environmental Certificates" document or www.jianghai-europe.com

APPROVALS

UL94-V0:

Plastic & Compound Mass

UL810:

CZDS2.E227010 (Construction)

(customized on request)

LAYOUT

Film capacitor modules are typically designed according to the customers requirements.
The mechanical and electrical parameter are defined by the engineering and our team Jianghai.

105°C or 125°C modules available on request.

Please contact Jianghai Europe for support.

In the sense of giving some impressions and ideas, please find on the following pages some module designs, which show some of the many technical possibilities.

EXAMPLE DRAWING #1 ▶

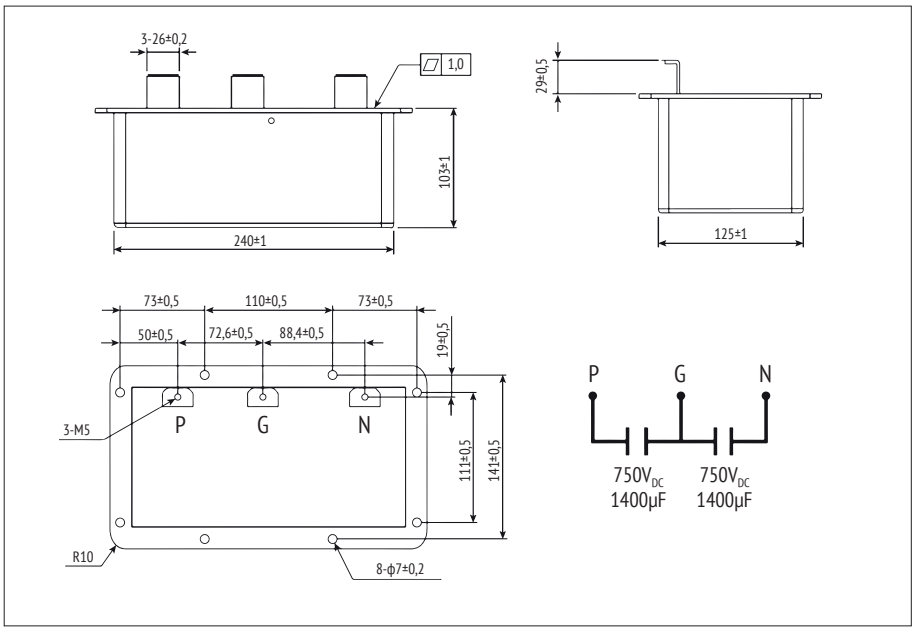

EXAMPLE DRAWING #2 ▶

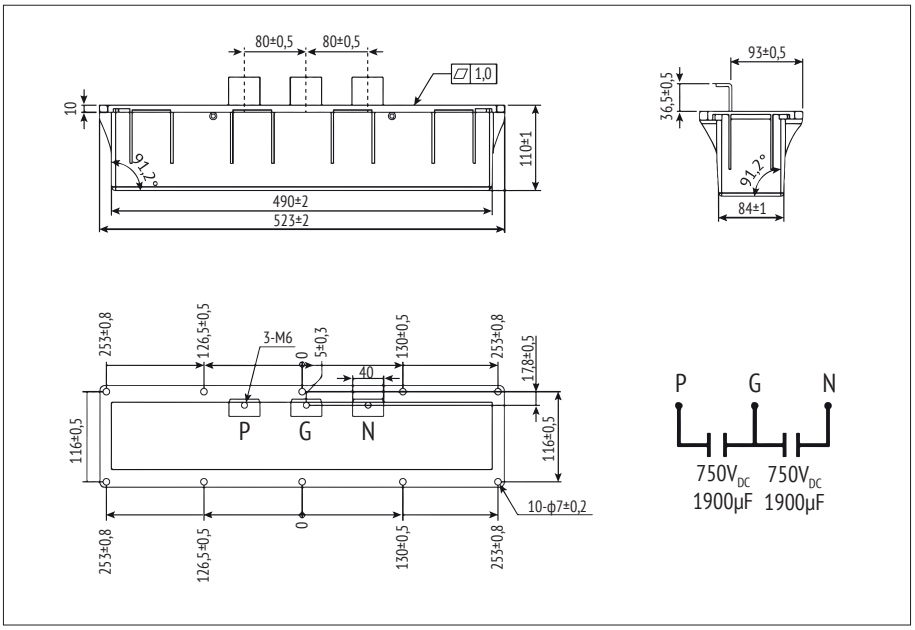

EXAMPLE DRAWING #3 ▶

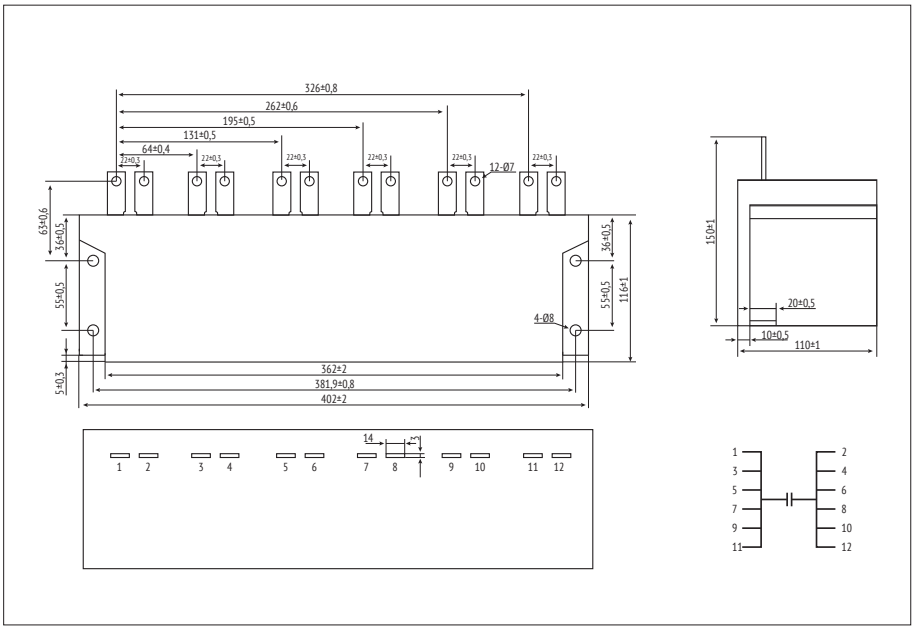

in mm

MODULES

EXAMPLE DRAWING #4

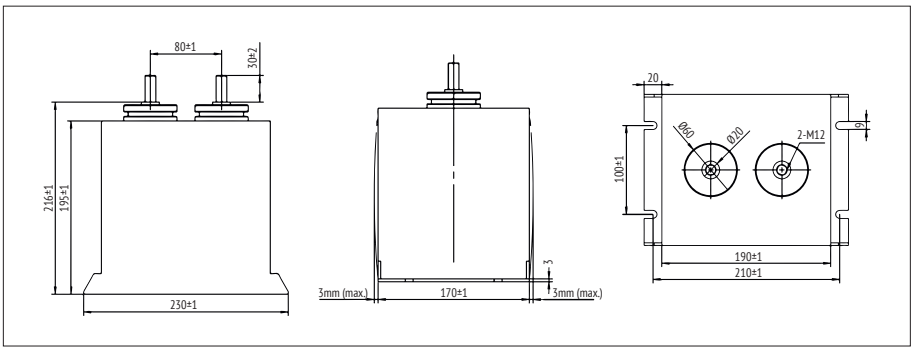

EXAMPLE DRAWING #5

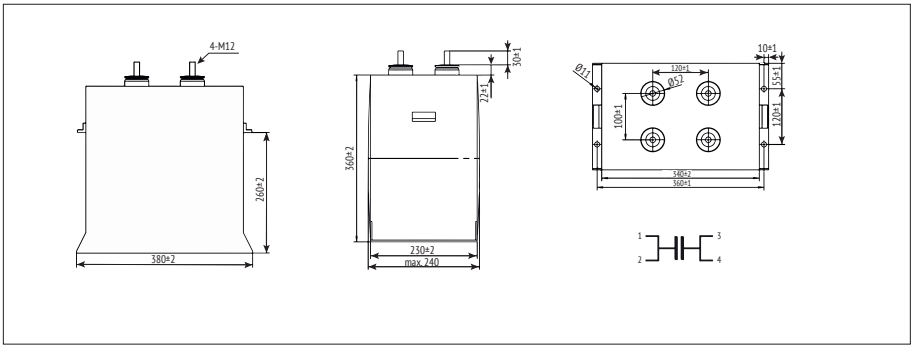

EXAMPLE DRAWING #6

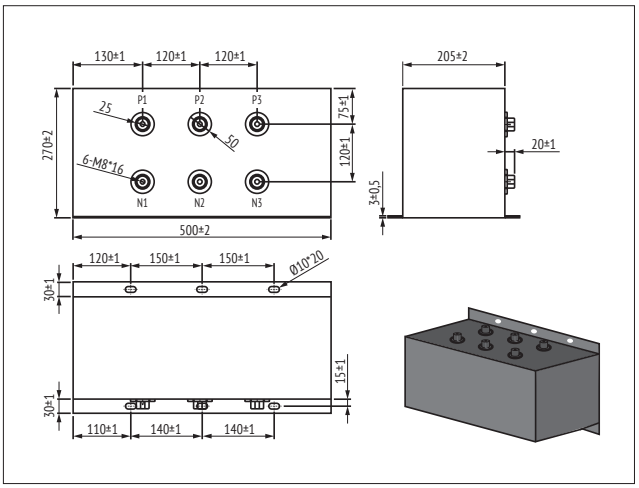

EXAMPLE DRAWING #7

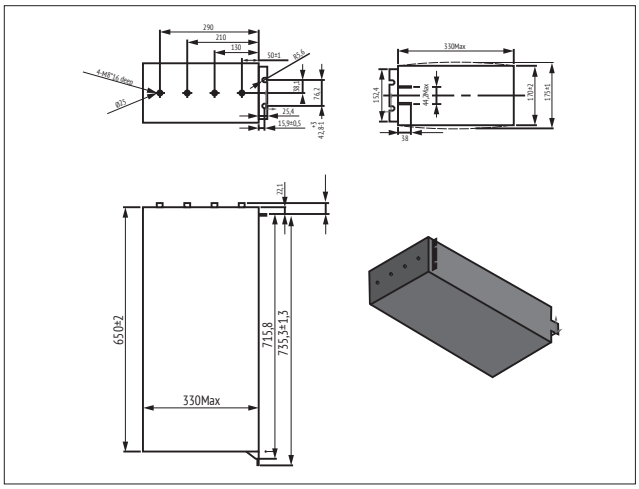

EXAMPLE DRAWING #8

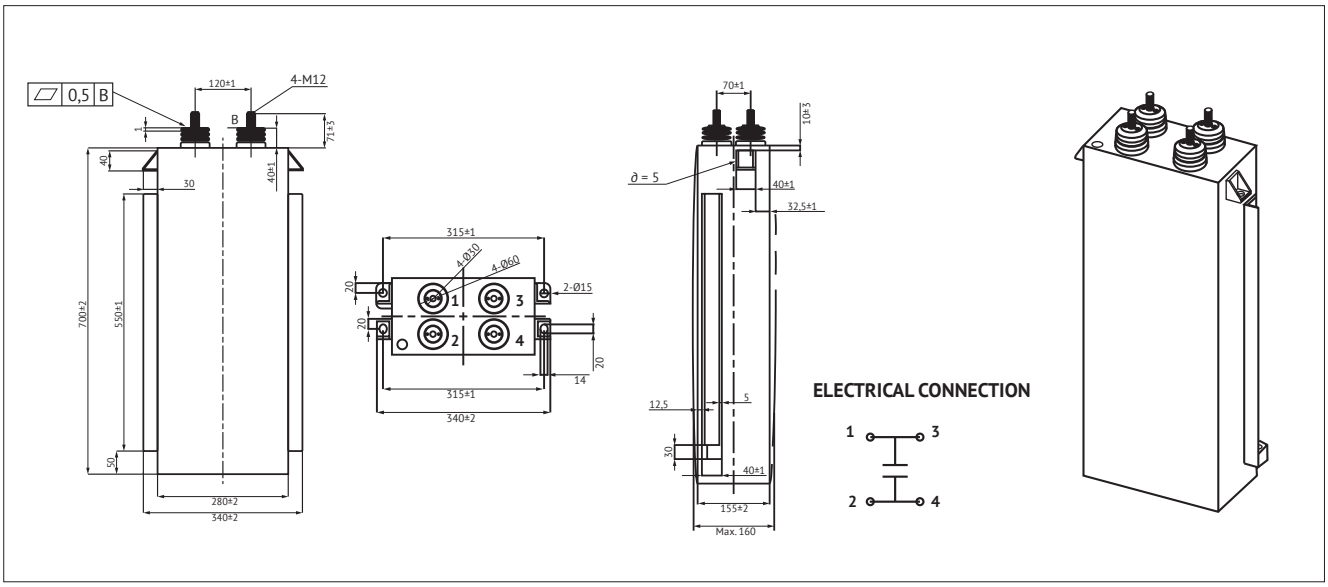

in mm

MODULES

FEATURES

- Customer Specific Designs
- High ripple current capability
- Self-healing
- Long lifetime

OVERVIEW

CBB 135 DV
Plastic housing
Page: 59

→ METAL CASE

CBB 133 DM
Metal housing
Page: 56

PRODUCT

APPLICATIONS

- High power frequency converters
- Electric and hybrid electric vehicles

CHARACTERISTICS (PROPOSAL)

ITEM	CHARACTERISTICS
Climatic Category	40/105/56 (IEC 61071)
Operating Temperature	–40 ~ +105°C ($\Theta_{hotspot}$ ≤ 105°C) $\Theta_{hotspot}$ = 85~105°C: See Voltage Derating Diagram
Storage Temperature	–40 ~ +105°C
Rated Voltage U_{RDC}	450 ~ 1 200V_{DC}
Capacitance Range	200 ~ 2 000µF
Capacitance Tolerance	±10% (K), ±5% (J)
Voltage between Terminals U_{TT}	1,5*U_{RDC} (20°C, 10s)
Voltage between Terminals and Case U_{TC}	≥ 3 000V_{AC} (20°C, 50Hz, 10s)
Max. Overvoltage	1,1*U_{RDC} (30% of time under load) 1,15*U_{RDC} (30min. per day) 1,2*U_{RDC} (5min. per day) 1,3*U_{RDC} (1min. per day) 1,5*U_{RDC} (max. 30ms, 100ms per day)
Insulation Resistance R_i*C	≥ 10 000MΩ*µF (20°C, 100 V_{DC}, 1min)
Dielectric Dissipation Factor tan ∂_0	≤ 2 * 10^{-4} (20°C, 1kHz)
Life Time Expectancy	100 000h, failure rate 100 FIT ($\Theta_{hotspot}$ 70°C, U_{RDC})
Reference Standard	IEC 61071:2007

ENVIRONMENTAL

The products are RoHS, WEEE and REACh compliant.

The detailed version please see seperate "Environmental Certificates" document or www.jianghai-europe.com

APPROVALS

UL94-V0:

Plastic & Compound Mass

UL810:

CZDS2.E227010
(Construction)

(customized on request)

LAYOUT

Film capacitor modules are typically designed according to the customers requirements.
The mechanical and electrical parameter are defined by the engineering and our team Jianghai.

105°C or 125°C modules available on request.

Please contact Jianghai Europe for support.

In the sense of giving some impressions and ideas, please find on the following pages some module designs, which show some of the many technical possibilities.

VOLTAGE DERATING

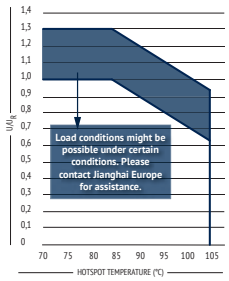

EXAMPLE DRAWING #1 ▶

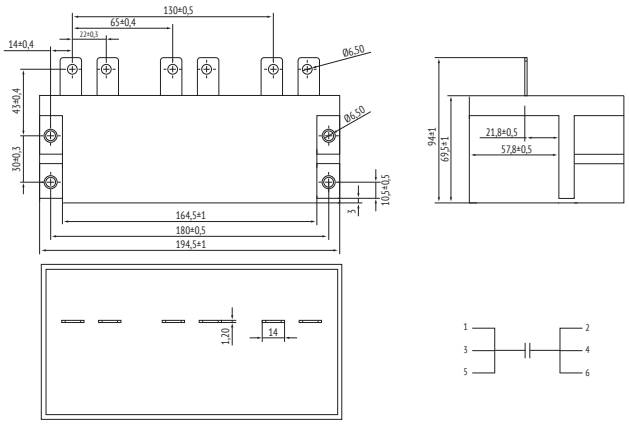

MODULES

EXAMPLE DRAWING #2 ▶

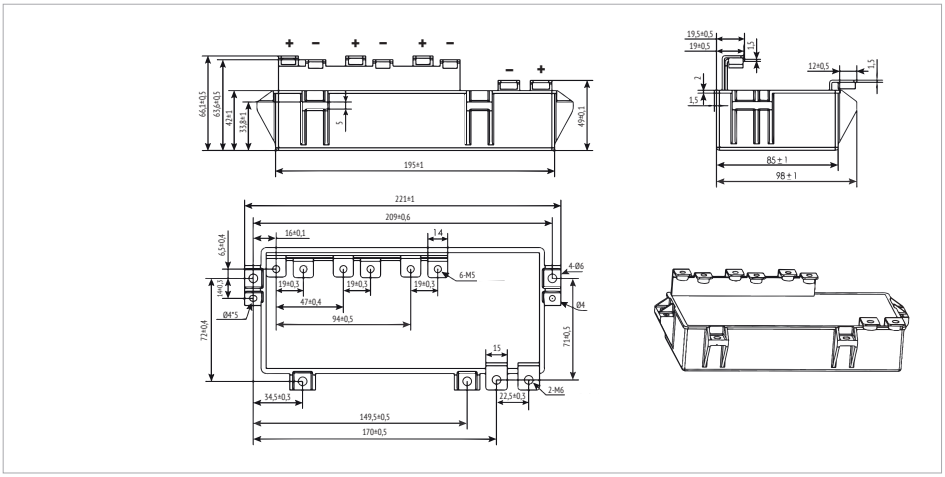

EXAMPLE DRAWING #3 ▶

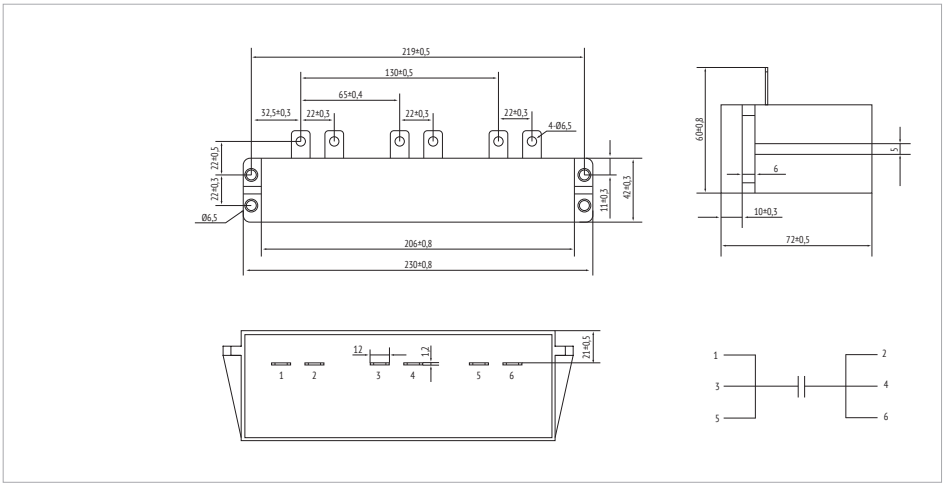

EXAMPLE DRAWING #4 ▶

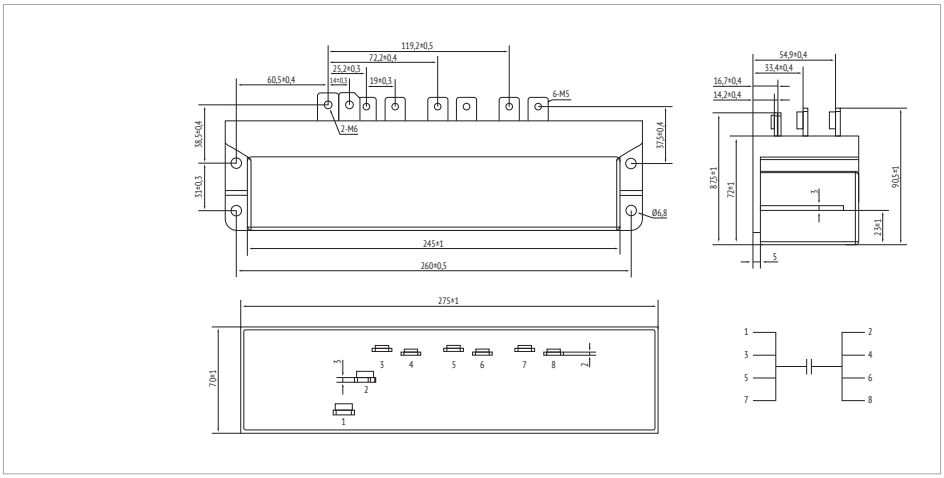

EXAMPLE DRAWING #5 ▶

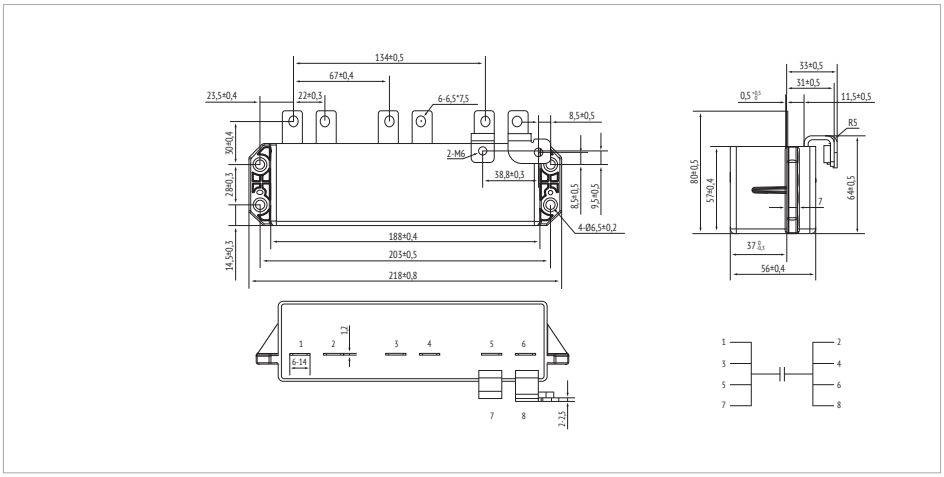

in mm

MODULES

EXAMPLE DRAWING #6 ▶

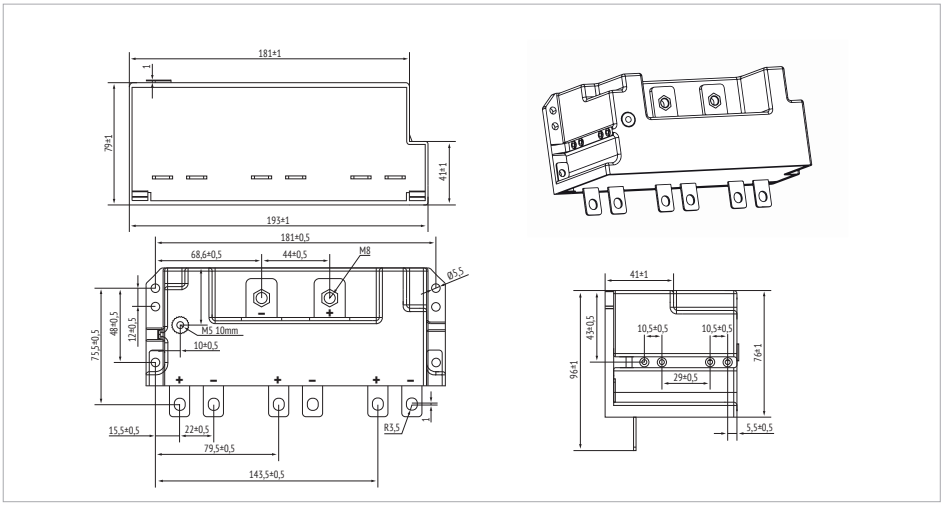

EXAMPLE DRAWING #7 ▶

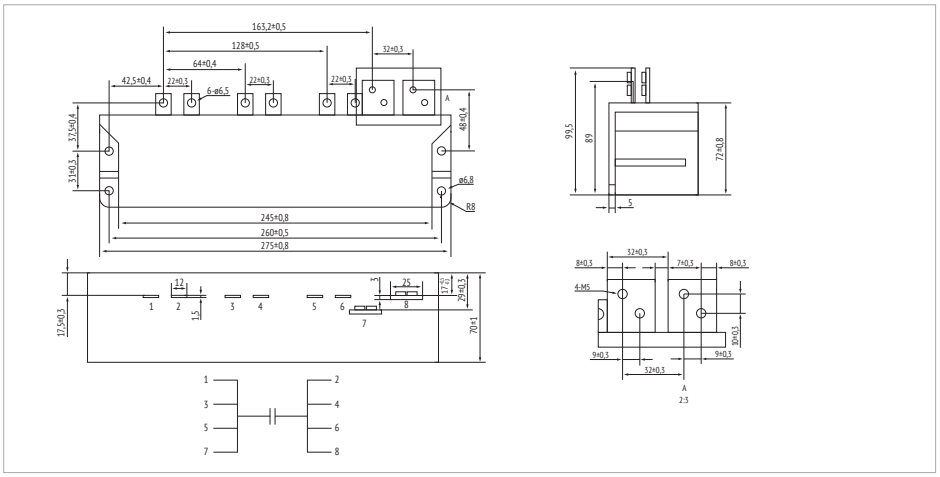

EXAMPLE DRAWING #8 ▶

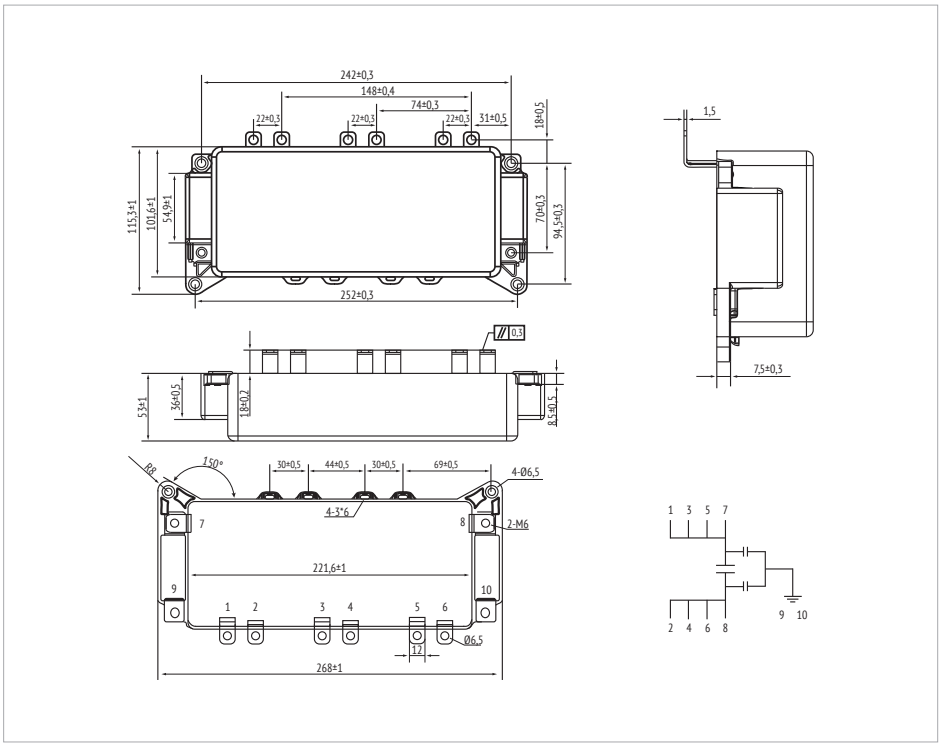

in mm

MODULES

EXAMPLE DRAWING #9 ▶

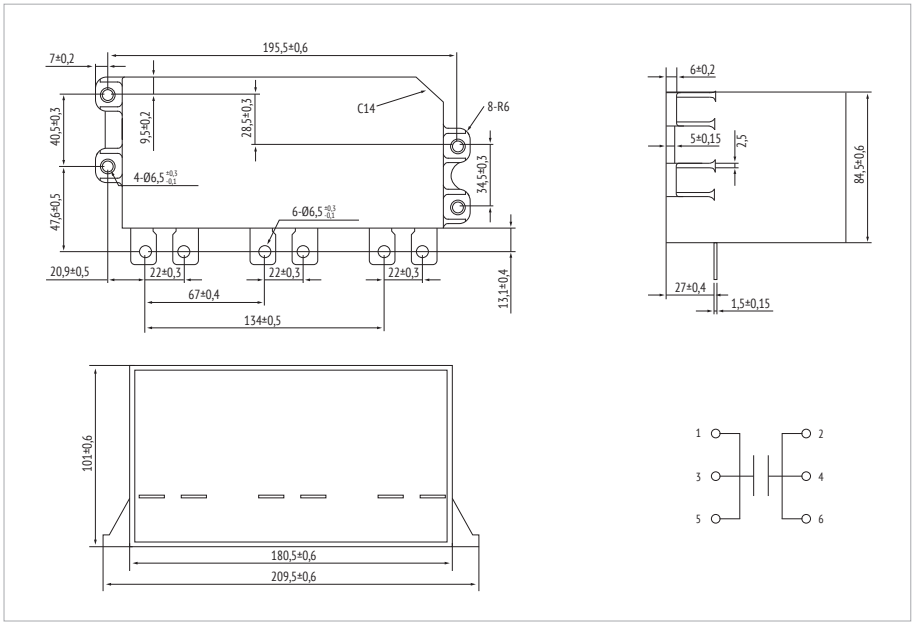

EXAMPLE DRAWING #10 ▶

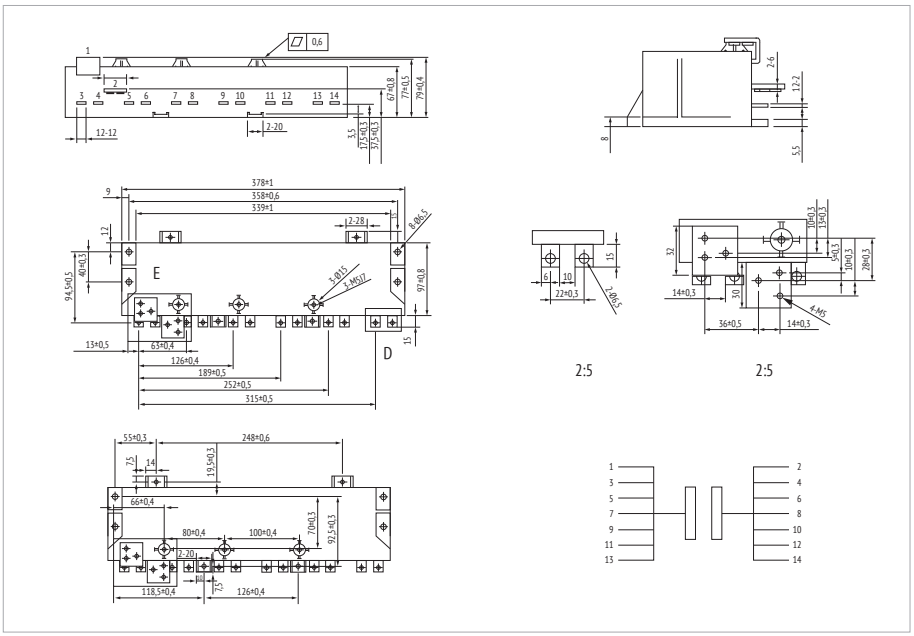

Picture credits: Designed by Freepik / Made by Freepik from www.flaticon.com / Designed by Kues / Freepik

CAPACITOR COMPETENCE

since 1958

JIANGHAI EUROPE

Electronic Components GmbH

ENGINEERED SOLUTIONS

Jianghai Europe Electronic Components GmbH
Uerdinger Str. 95 · 47799 Krefeld/Germany
Tel.: +49 (0) 2151-652088-0 · Fax: -88
info@jianghai-europe.com
www.jianghai-europe.com

Nantong Jianghai Capacitor Co., Ltd.
No. 79 South Tong Yang Road
226361 Nantong, Jiangsu/China
Tel.: +86-513-8672-6080 · Fax: -3859
jh@jianghai.com
www.jianghai.com

Jianghai Capacitor America
12100 Wilshire Blvd. Suite 1955
Los Angeles, CA 90025 USA
Tel.: +1-706-490-3415 and +1-626-274-1692
info@jhccamerica.com
www.jianghai.com