2026

CAPACITORS

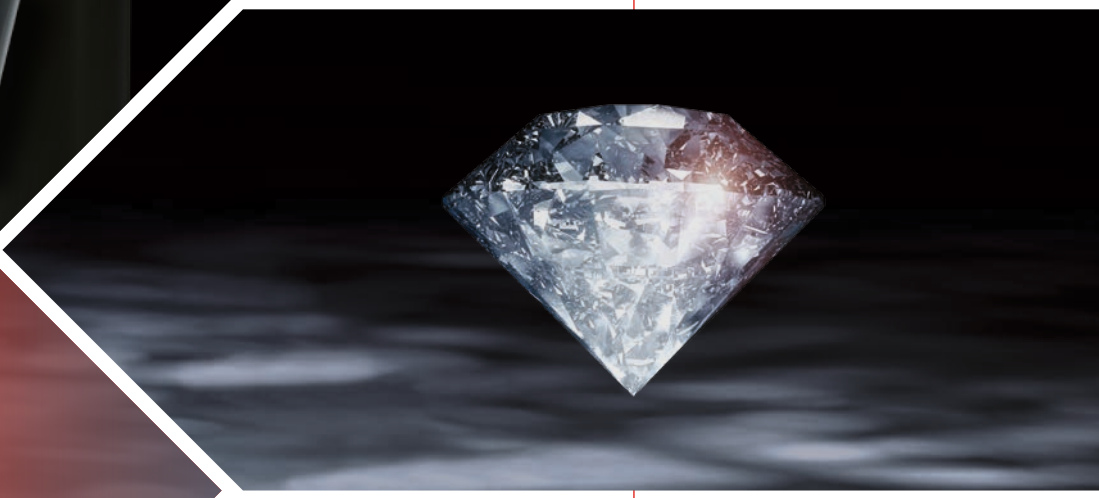

Aluminum Electrolytic technical data

Excellence
in Capacitors

AIC EUROPE
Sales & technical support of AIC capacitors

Excellence in Capacitors

AICtech

As a continuation of the 70-year success story written under the Hitachi Group with the brand **HITACHI AIC**, the same players in Japan keep up their passion and quality standards for high-end capacitors under the manufacturer name **AIC tech Inc.**

With a continued spirit of innovation, **AIC tech** remains committed to stay at the forefront of the development and manufacturing of aluminum electrolytic and metallized film capacitors. This is based on the fact that **AIC tech** still holds the key technologiy for the aluminum anode foil in its own hands.

In addition to all the excellent product features, this significant advantage combined with **the Japanese mentality and their zero tolerance** for defects is reflected in the longevity and absolute reliability of AIC capacitors.

The annualy measured field failure rate of less than 0.5 FIT is a proof of this success.

Ganz im Sinne der gut 70-jährigen Erfolgsgeschichte, die unter der Hitachi Gruppe mit der Marke **HITACHI AIC** geschrieben wurde, setzen die gleichen Akteure in Japan ihre Leidenschaft und Qualitätsstandards für High-End Kondensatoren unter dem Herstellernamen **AIC tech Inc.** fort.

Mit anhaltendem Innovationsgeist verpflichtet sich **AIC tech** weiterhin, eine Vorreiterrolle bei der Entwicklung und Fertigung von Aluminium Elektrolyt und Film Kondensatoren zu spielen. Grundlage hierfür ist die Tatsache, dass **AIC tech** weiterhin die Schlüsseltechnologie für die Aluminium Anodenfolien in den eigenen Händen hält.

Dieser bedeutende Vorteil kombiniert mit der **japanischen Mentalität und ihre Null-Toleranz** gegenüber Fehlern spiegelt sich neben allen hervorragenden Produktspezifikationen auch in der Langlebigkeit und der absoluten Zuverlässigkeit der AIC Kondensatoren wider.

Die jährlich gemessene Feldausfallrate kleiner 0,5 FIT belegt diesen Erfolg.

AIC EUROPE

We gratefully look back on over 30 years of general agency for the manufacturer, which is known on the market for one of the lowest field failure rate for many years.

Our decades of experience with capacitor bank configuration in Germany gives us the profound knowledge to select the right capacitor configuration for your application and to overcome side by side with the Japanese product engineers and your own R&D team nearly all technical challenges.

Especially here, the high current capability at the upper temperature range, the high dielectric strength, the low ESR as well as the compact designs of our products **continue to set standards in the market.**

In parallel, we reliably supply your worldwide production just in time and master the short-term demands fluctuations through our local safety and consignment stocks as well as through direct contact with the production and logisticians.

All these points make AIC EUROPE your first-class and preferred partner wherever the lifetime of your high-end application depends on the capacitor bank.

Wir blicken mit Dankbarkeit auf über 30 Jahre Generalvertretung für den Hersteller, welcher am Markt mit der niedrigsten Feldausfallrate langjährig bekannt ist.

Unsere Jahrzehnte lange Erfahrung mit der Auslegung von Kondensatoren Bänken verschafft uns das fundierte Wissen, das richtige Bauteil für Ihre Applikation zu finden und Seite an Seite mit den japanischen Entwicklern fast alle technischen Herausforderungen zu meistern.

Gerade hierbei setzen die hohe Stromtragfähigkeit im oberen Temperaturbereich, die hohe Spannungsfestigkeit, der niedrige ESR sowie die kompakten Designs unserer Produkte nach wie vor Maßstäbe im Markt.

Gleichzeitig beliefern wir Ihre weltweite Produktion termingerecht und meistern kurzfristige Bedarfsschwankungen durch unsere lokalen Sicherheits- und Konsignationslager sowie durch den direkten Kontakt mit der Produktion und Logistikern.

All diese Punkte machen AIC EUROPE zu Ihrem erstklassigen und bevorzugten Partner, wo immer die Brauchbarkeitsdauer Ihrer Produkte von der Zuverlässigkeit der Kondensatoren Bank abhängt.

› Radial Capacitor – Series Overview
Radial Kondensatoren – Überblick der Serien

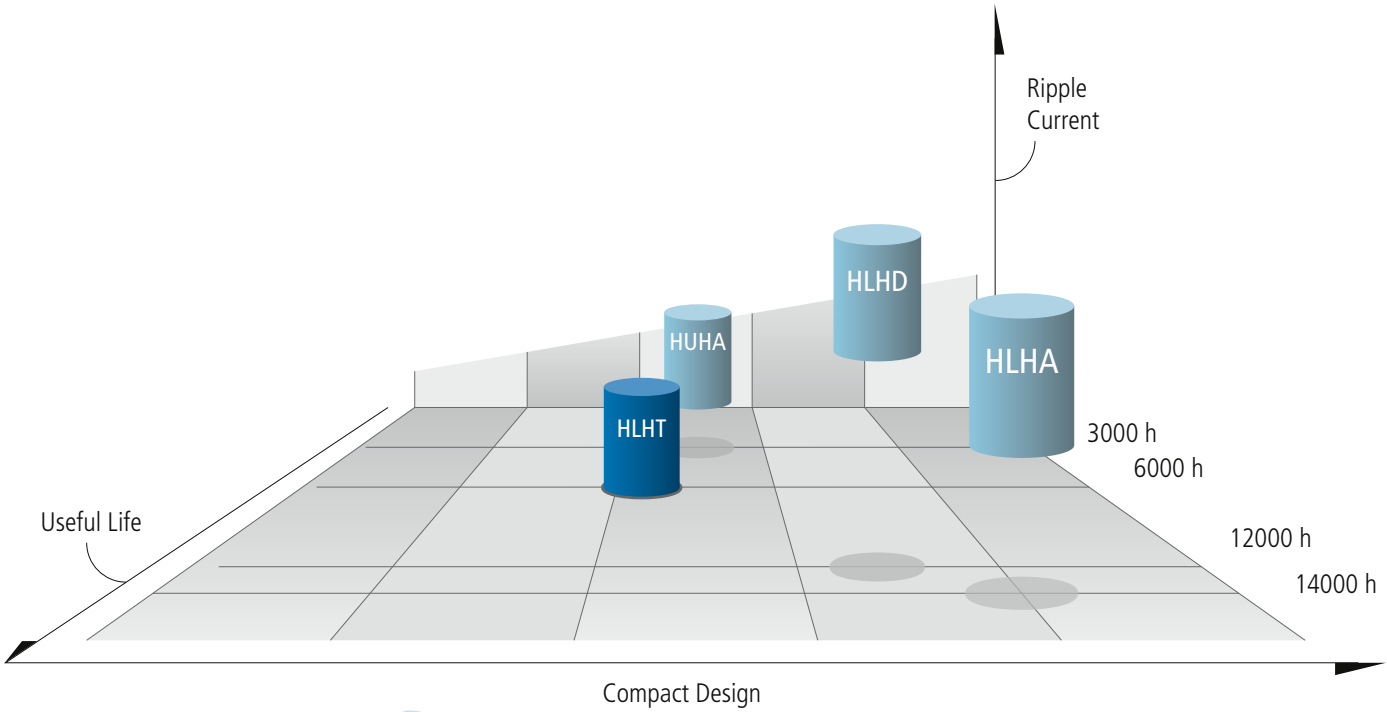

105 °C Radial Capacitor

HUHA 6.3 V – 500 V · -40 °C ~ +105 °C · 3000 h at 105 °C
Standard Performances 18

HLHA 160 V – 450 V · -40 °C ~ +105 °C · 14000 h at 105 °C
Compact Design · Long Life 29

HLHD 160 V – 550 V · -40 °C ~ +105 °C · 12000 h at 105 °C
High Ripple Current · High Voltage · Long Life 38

125 °C Radial Capacitor

HLHT 160 V – 450 V · -40 °C/-25 °C ~ +125 °C · 6000 h at 125 °C
Highest Temperature Design 45

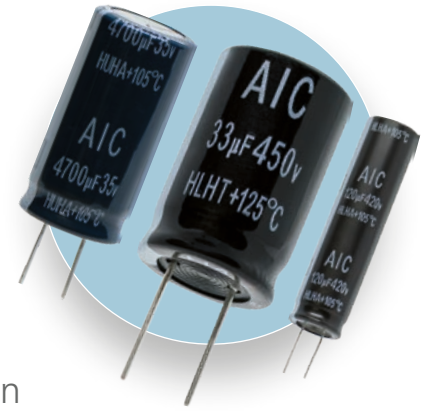

> Radial Outline Drawings · Radiale Bauformen

Shape · Form: **L** (long lead T1 = 15 mm min, T2 = 20 mm min)

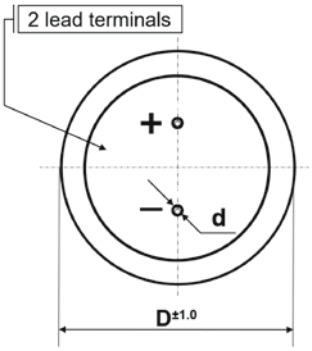

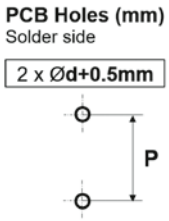

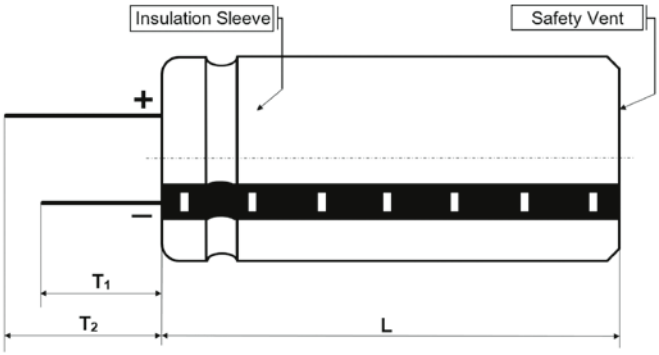

Diameter [D mm]	5.0	6.3	8.0	10.0	12.5	16.0	18.0	20.0	22.0
Pitch (P mm)	2.0	2.5	3.5	5.0	5.0	7.5	7.5	7.5*	10.0
Lead diameter (d mm)	0.5		0.6			0.8			1.0

* Also available with P = 10.0 mm

Shape · Form: **CUT**

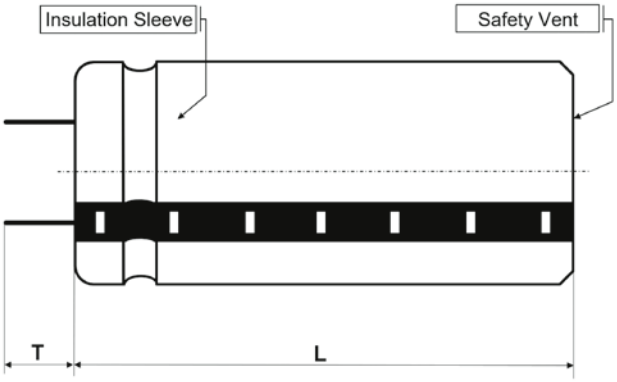

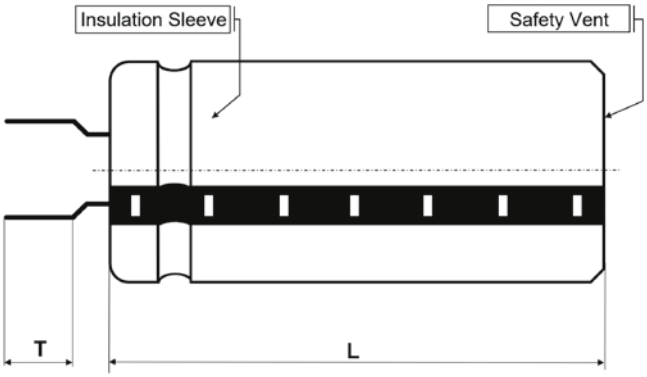

Straight lead / bended lead	C	D	E	F
T (± 0.5 mm)	4.5	4.0	3.5	3.0

Shape · Form: **bended** or **taped** available on request

› Snap-In Capacitor – Series Overview
Snap-In Kondensatoren – Überblick der Serien

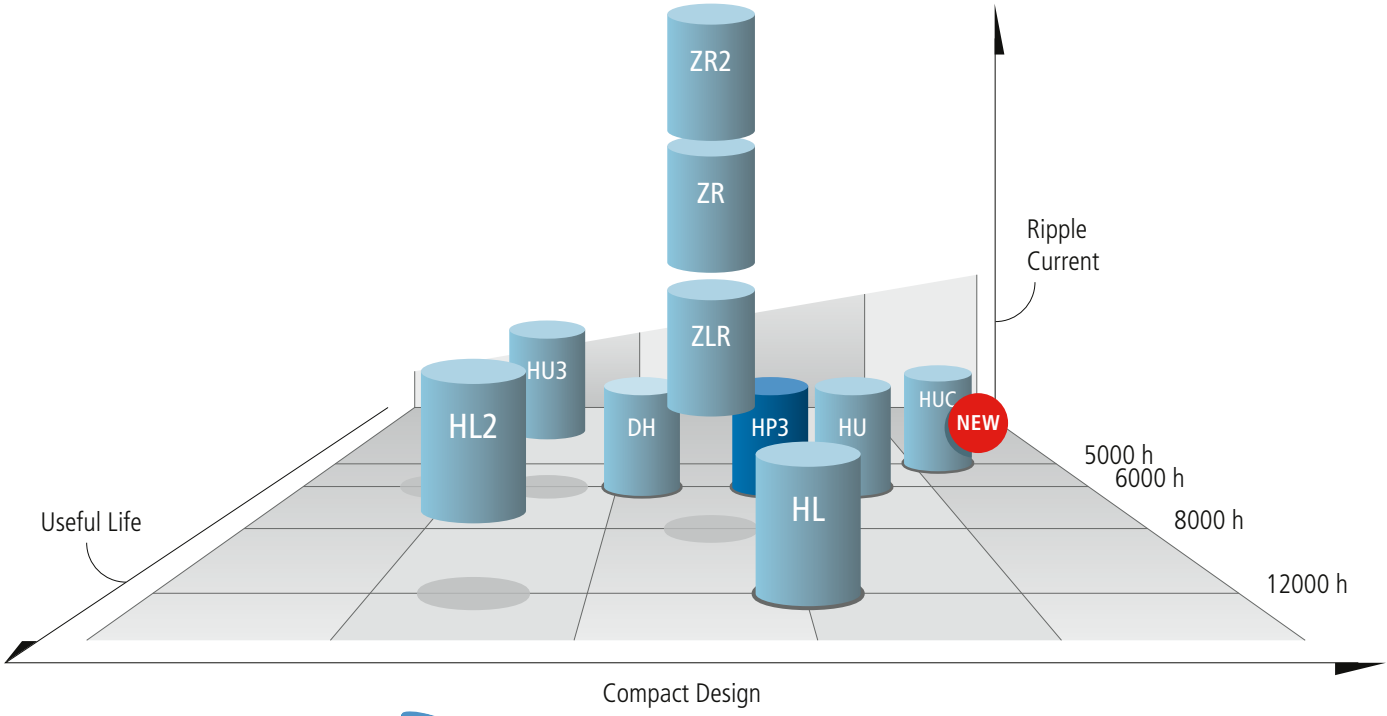

85 °C Snap-In Capacitor

HP3 16 V – 500 V · -40 °C ~ +85 °C · 6000 h at 85 °C
Standard Performances · Compact Design 50

105 °C Snap-In Capacitor

HU3 16 V – 500 V · -40 °C ~ +105 °C · 6000 h at 105 °C
Standard Performances · Higher Ripple 66

HU 200 V – 550 V · -40 °C ~ +105 °C · 6000 h at 105 °C
Standard Performances · Most Compact Design 79

HUC 450 V · -25 °C ~ +105 °C · 5000 h at 105 °C NEW
Higher Capacitance · Most Compact Design 91

HL 200 V – 500 V · -40 °C ~ +105 °C · 12000 h at 105 °C
Compact Design · Long Life 95

HL2 200 V – 500 V · -40 °C ~ +105 °C · 12000 h at 105 °C
Long Life 104

DH 400 V – 450 V · -25 °C ~ +105 °C · 6000 h at 105 °C
Permanent and deep Charge-Discharge application Design 109

ZLR 400 V – 450 V · -25 °C ~ +105 °C · 8000 h at 105 °C
High Ripple Current · ULTRA low ESR · Compact Design 113

ZR 400 V – 450 V · -40 °C ~ +105 °C · 8000 h at 105 °C
Higher Ripple Current · ULTRA low ESR · Compact Design 117

ZR2 400 V – 450 V · -25 °C (-40 °C on request) ~ +105 °C · 8000 h at 105 °C
Highest Ripple Current · Side Vent · Low ESR · Compact Design 121

› Snap-in Outline Drawings · Snap-in Bauformen

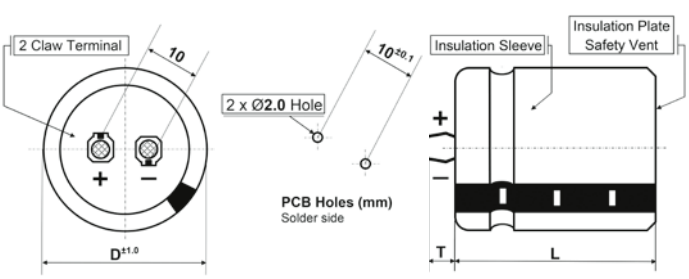

Shape · Form: **R** (D = 20 ~ 35 mm, long pin **T** = 6.3 ± 1.0 mm)
C (D = 20 ~ 35 mm, short pin **T** = 4.0 ± 0.5 mm)

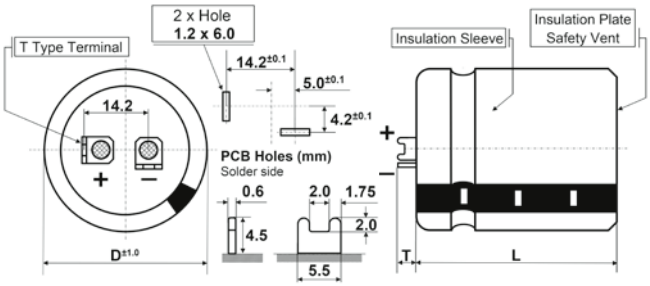

Shape · Form: **T** (D = 30 ~ 40 mm, **T** = 4.5 ± 0.5 mm)

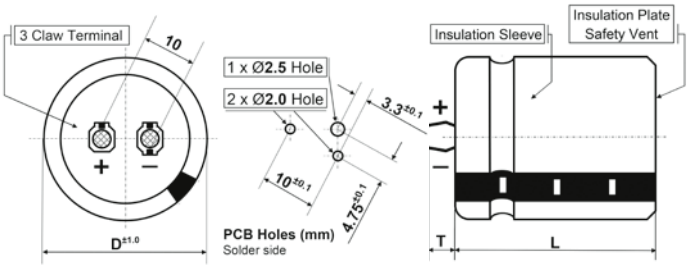

Shape · Form: **E** (D = 22 ~ 35 mm, **T** = 4.0 ± 0.5 mm)

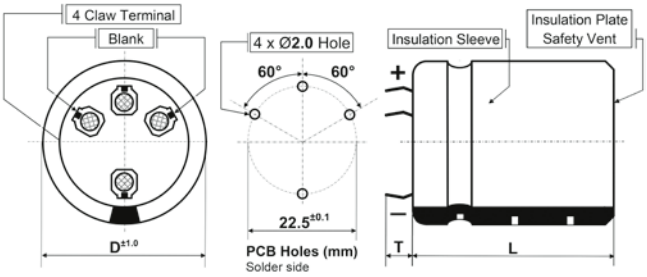

Shape · Form: **S** (D = 35 ~ 46 mm, long pin **T** = 6.3 ± 1.0 mm)
X (D = 35 ~ 46 mm, short pin **T** = 4.0 ± 1.0 mm)

› Side vent · seitliches Ventil

- standard design for ZR2 series
  serienmäßig bei ZR2
- optional design for HP3, HU3, HU & ZR
  auf Wunsch auch für HP3, HU3, HU & ZR

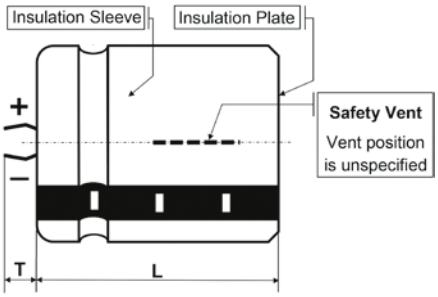

› 85 °C Screw-Terminal Capacitor – Series Overview
85 °C Schraubanschluss Kondensatoren – Überblick der Serien

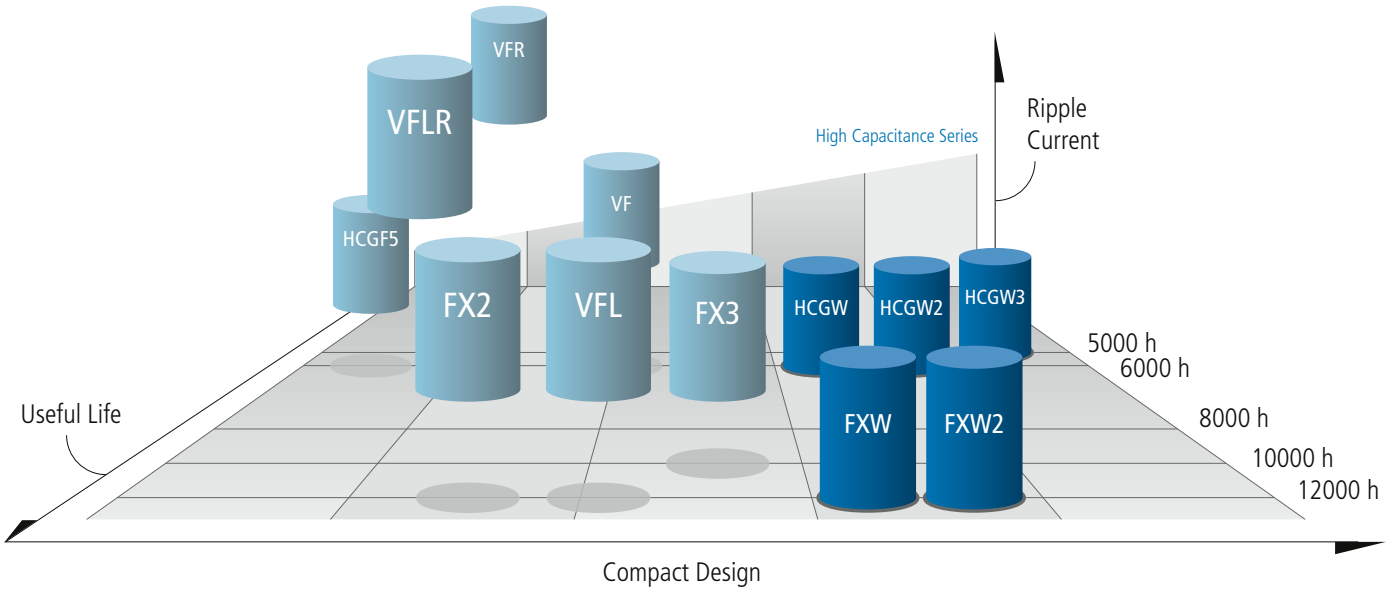

85 °C Screw-Terminal Capacitor

VF 6.3 V – 650 V · -40 °C ~ +85 °C · 6000 h at 85 °C
Standard Performances · Bottom cooling design · Smaller Size
optional design for permanent and deep charge-discharge application 128

VFL 350 V – 600 V · -40 °C ~ +85 °C · 12000 h at 85 °C
Long Life · Bottom cooling design · Smaller Size
optional design for permanent and deep charge-discharge application 138

FX2 350 V – 600 V · -40 °C ~ +85 °C · 12000 h at 85 °C
Long Life · Compact
optional design for permanent and deep charge-discharge application 144

FX3 400 V – 500 V · -40 °C ~ +85 °C · 10000 h at 85 °C
More Compact Design · Long Life
optional design for permanent and deep charge-discharge application 150

HCGW 350 V – 500 V · -10 °C ~ +85 °C · 6000 h at 85 °C
High capacitance · Ultra compact
optional design for permanent and deep charge-discharge application 154

HCGW2 400 V – 500 V · -10 °C ~ +85 °C · 6000 h at 85 °C
Higher capacitance · Ultra compact
optional design for permanent and deep charge-discharge application 158

HCGW3 350 V – 500 V · -10 °C ~ +70 °C · 5000 h at 70 °C
Highest capacitance · Most Compact
optional design for permanent and deep charge-discharge application 162

FXW 350 V – 450 V · -10 °C ~ +85 °C · 12000 h at 85 °C
High capacitance · Ultra compact · Long Life
optional design for permanent and deep charge-discharge application 166

FXW2 350 V – 500 V · -10 °C ~ +85 °C · 12000 h at 85 °C
Higher capacitance · Ultra compact · Long Life
optional design for permanent and deep charge-discharge application 170

HCGF5 160 V – 250 V · -25 °C ~ +85 °C · 6000 h at 85 °C
Standard Performances · Small Diameter Design
optional design for permanent and deep charge-discharge application 174

VFR 350 V – 500 V · -40 °C ~ +85 °C · 6000 h at 85 °C
High Ripple Current · Bottom cooling design · Low ESR 178

VFLR 350 V – 500 V · -40 °C ~ +85 °C · 12000 h at 85 °C
Long Life · High Ripple Current · Bottom cooling design · Low ESR 183

› 105 °C Screw-Terminal Capacitor – Series Overview
105 °C Schraubanschluss Kondensatoren – Überblick der Serien

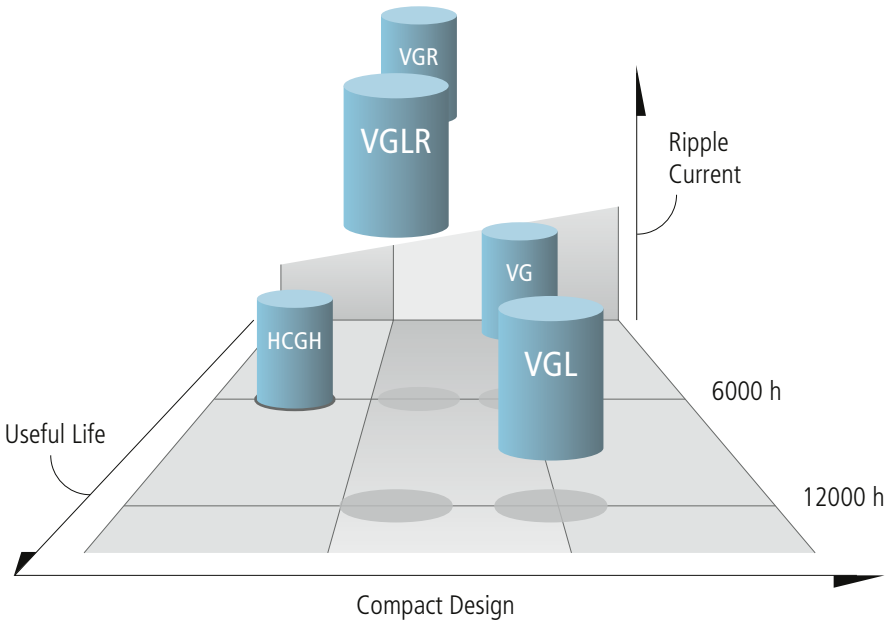

105 °C Screw-Terminal Capacitor

VG 25 V – 500 V · -40 °C ~ +105 °C · 6000 h at 105 °C
Standard Performances · Bottom cooling design
optional design for permanent and deep charge-discharge application 188

VGL 350 V – 500 V · -40 °C ~ +105 °C · 12000 h at 105 °C
Long Life · Bottom cooling design
optional design for permanent and deep charge-discharge application 196

HCGH 25 V – 450 V · -40 °C ~ +105 °C · 6000 h at 105 °C
Standard Performances · Small Diameters
optional design for permanent and deep charge-discharge application 201

VGR 350 V – 500 V · -40 °C ~ +105 °C · 6000 h at 105 °C
High Ripple Current · Bottom cooling design · Low ESR 208

VGLR 350 V – 500 V · -40 °C ~ +105 °C · 12000 h at 105 °C
Long Life · High Ripple Current · Bottom cooling design · Low ESR 213

Mounting 219
Accessories 225
Handling Cautions 228

Screw-Terminal

› Shape Code · Form Code

Shape Code	N	N + suffix WC	B	I or Y or X
single outer sleeve	•	•	•	•
standard or customized insulation plate	•		•	•
stud bolt for cap nut fixing			•	
bottom double sleeve for mounting with metal bracket				•
integrated seating ring and blank bottom for radiator mounting		•		
Mounting for details refer to p. 219 ff **Montage** Montagedetails siehe S. 219 ff	 PBT holder/pressring/ customized mounting	 PBT holder for bottom cooling	 Cap Nut fixing	 metal bracket mounting

› Terminal thread hole depth & tightening torques
Gewindebohrungstiefe und Anzugsdrehmomente

Cap material	Terminal	Series	Thread hole depth	Tightening torque Recommended	Min	Max
PH	M5	HCGF5/-6, FX2/-3, HCGW, FXW, HCGH	9 mm	2.2 Nm	1.5 Nm	3.0 Nm
		VF(L), VG(L), VF(L)R, VG(L)R, HCGW2/-3, FXW2	10 mm			
	M6	all	11 mm	3.5 Nm	3.0 Nm	4.0 Nm*
	M8	FX2	13 mm	7.5 Nm	7.0 Nm	8.0 Nm
PPS	M5	all	10 mm	2.2 Nm	1.5 Nm	3.0 Nm
	M6	all	10 mm	3.5 Nm	3.0 Nm	4.0 Nm*

* 6.0 Nm when Screw-In depth >= 9 mm

› Screw Type Outline Drawings · Schraubanschluß Typ Bauformen

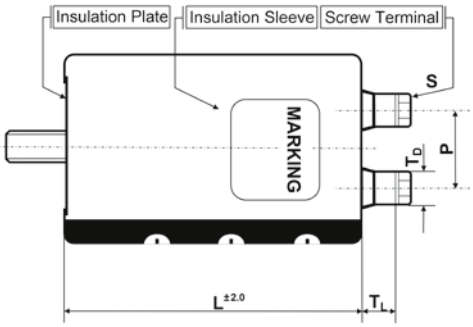

Shape · Form: **B = stud bolt** (not isolated)

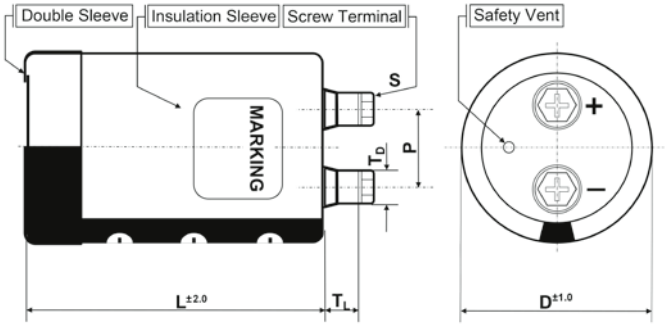

Shape · Form: **I,Y, X = bottom double sleeve**
for metal bracket mounting
I type: 2 fixing point – Ø D = 36-90 mm
Y type: 3 fixing point – Ø D = 51-101 mm
X type: 4 fixing point – Ø D = 121 mm

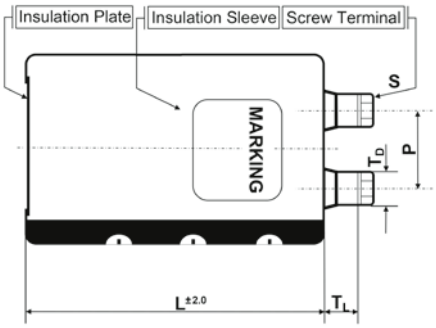

Shape · Form: **N** (for PBT-Holder – Ø D = 77-101 mm or for press ring – Ø D = 64-90 mm or customized)

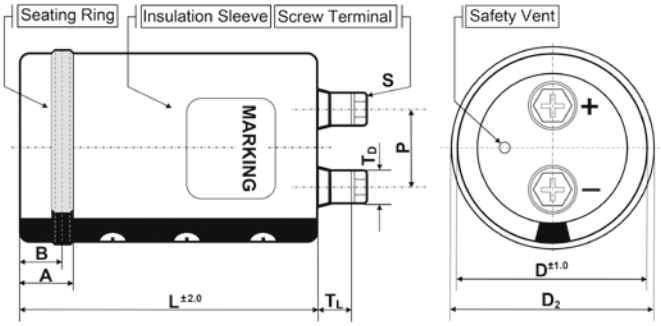

Shape · Form: **N** with Suffix **WC** (blank bottom and integrated seating ring for radiator mounting – Ø D = 77-90 mm)

Capacitor	Terminals (Standard)			Stud bolt
ØD	P	S[1]	$I_{r\,max}$	ØD x L
36	12.7	M5x10	60A	M8x10
51	22.0	M5x10	60A	M12x16
64	28.6	M5x10	60A	M12x16
77	31.5	M5x10[2]	60A	M12x16
		M6x12[3]	100A	
90	31.5	M5x10[2]	60A	M12x16
		M6x12[3]	100A	
101	31.5	M6x12[4]	100A	M12x16
	41.5	M8x16[5]	120A	
121	41.5	M6x12	100A	–
	41.5	M8x16	120A	

[1] First listed terminal is standard, if not mentioned in the product code
[2] All series except HCGW2, HCGW3, VFR, VFLR, VGR, VGLR, FXW2
[3] HCGW2, HCGW3, VFR, VFLR, VGR, VGLR, FXW2
[4] HCGF5, HCGF6, HCGW, FXW
[5] FX2

Compliance statement
Compliance Erklärung

As a well-established European supplier of electronic components, we are aware of our responsibilities and obligations in regards to the laws and regulations concerning the safety, health and welfare at work of every single person working along our supply chain as well as of the people who come into contact with our components.

This leads AIC Europe to exclusively work with manufacturers who share our respect for human rights, ethics and the protection of the environment and in particular to take due diligence, that their parts entirely complies with the applicable regulations.

Products and accessories from this catalog comply among other with the following regulations and directives at the beginning of 2026:

Als langjähriger europäischer Lieferant von elektronischen Bauteilen sind wir uns unserer Verantwortung und Verpflichtung gegenüber den Gesetzen und Vorschriften in Bezug auf die Sicherheit, die Gesundheit und das Wohlergehen jedes einzelnen Mitarbeiters in unserer Lieferkette sowie der Menschen, die mit unseren Bauteilen in Berührung kommen, bewusst.

Dies veranlasst AIC Europe, ausschließlich mit Herstellern zusammenzuarbeiten, die unsere Achtung der Menschenrechte, der Ethik und des Umweltschutzes teilen und insbesondere darauf zu achten, dass ihre Erzeugnisse den geltenden Vorschriften vollständig entsprechen.

Produkte und Zubehör aus diesem Katalog erfüllen zu Beginn 2026 unter anderen folgende Vorschriften:

- Restriction of Hazardous Substances Directive **RoHS** 2011/65/EU & amendment (EU)2015/863
- Regulation (EC) No 1907/2006 **REACH**
  Registration, Evaluation, Authorisation and Restriction of Chemicals based on the SVHC candidate list updated by 2026, February 4th
- OECD Due Diligence Guidance for Responsible Supply Chains of Minerals from Conflict-Affected and High-Risk Areas by providing for all our products
  - a Conflict Minerals Reporting Template **(CMRT)** in accordance with the Dodd-Frank Wall Street Reform and Consumer Protection Act, Section 1502 on conflict minerals
  - an Extended Minerals Reporting Template **(EMRT)** for further conflict minerals
- Regulation/Verordnung (EU) 2019/1021 on persistent organic pollutants – **POP** ammended by delegated Regulation (EU) 2021/277
- Safe Drinking Water and Toxic Enforcement Act of 1986 (California's Proposition **CP65**) Chemicals known to the State to cause cancer or reproductive toxicity (as of Dec 8, 2020)
- Toxic Substances Control Act 1976 EPA **TSCA** 6 (h)

AICtech & AIC EUROPE

AIC tech and AIC EUROPE remain committed to

- continiously collect relevant information with our reasonably best available effort from our suppliers and provide our best available information to our customers
- provide updated information timely to the customers when we receive modified or added information from our suppliers
- strive to spread this approach along our supply chains to ensure that, in the end, our customers too comply with the relevant regulations

AIC tech und AIC EUROPE verpflichten sich weiterhin

- kontinuierlich und nach bestem Wissen und Gewissen relevante Informationen von ihren Lieferanten zu sammeln und ihren Kunden die besten verfügbaren Informationen zur Verfügung zu stellen.
- ihren Kunden rechtzeitig aktualisierte Informationen zur Verfügung zu stellen, wenn wir geänderte oder zusätzliche Informationen von unseren Lieferanten erhalten
- sich zu bemühen, diesen Ansatz entlang unserer Lieferketten zu verbreiten, um sicherzustellen, dass am Ende auch unsere Kunden die relevanten Vorschriften einhalten.

Radial Series Data

HUHA · HLHA · HLHD · HLHT

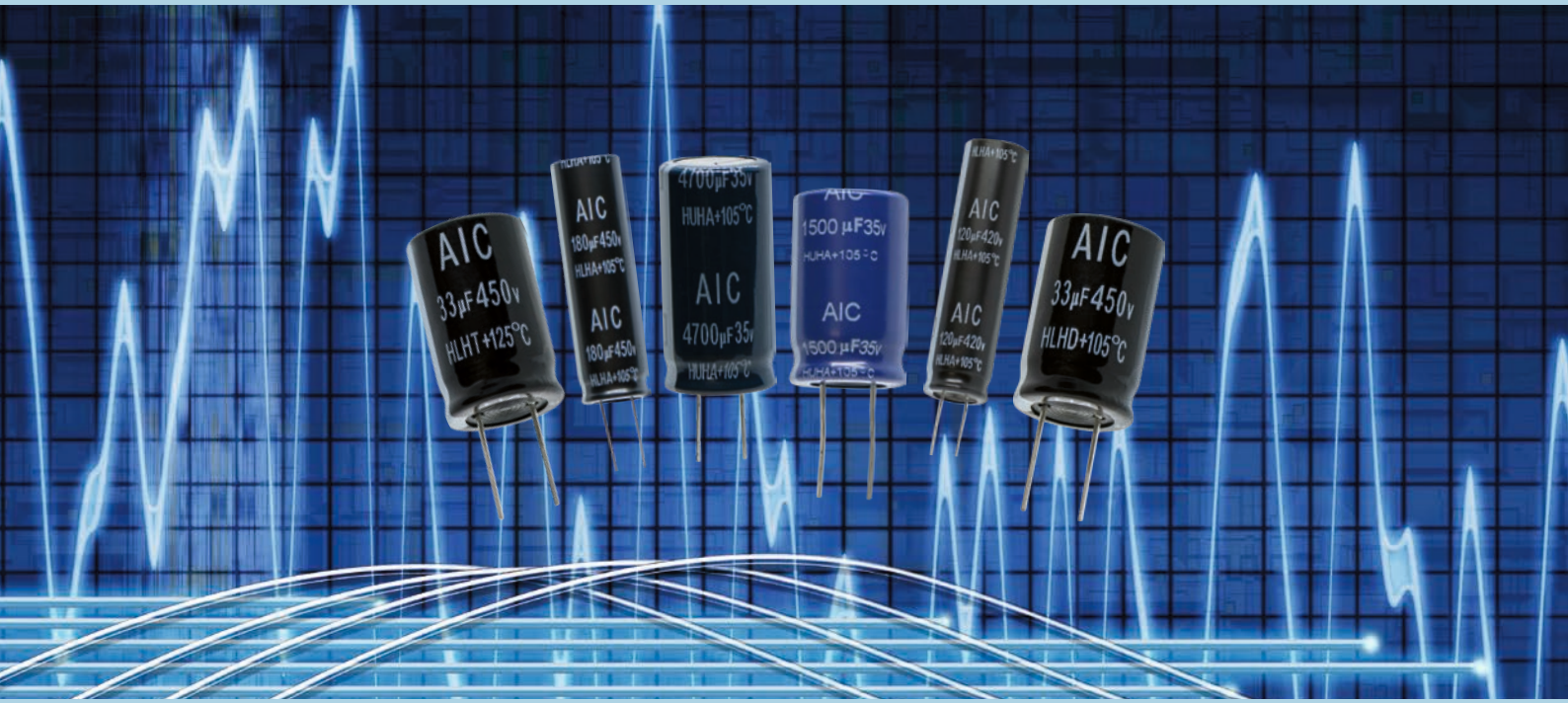

HUHA · Radial · 3000 h/105 °C

Standard Performances

> Specifications · Spezifikationen

Items	Characteristics
Temperature range	-40 °C ~ + 105 °C for rated voltage 6.3 – 250 V -25 °C ~ + 105 °C for rated voltage 350 – 500 V
Capacitance tolerance (at 20 °C)	Standard +/- 20 % at 20 °C
Surge voltage	Repetitive max. 30 sec per 6 Minutes, 1000 times
Leakage current max. I_L (20 °C, 1 min)	Refer to the specific item value in product table
Useful life	3000 hours at 105 °C; I_r, V_r
Shelf life	1000 hours at 105 °C, $I_r = V_r = 0$
Reference standards	IEC 60384-4
Vibration	0.75 mm, 10...55 Hz, 10 g, 3x2 h
Product Compliance	RoHS, REACH, Conflict Minerals a.o. - refer to p. 14 – 15

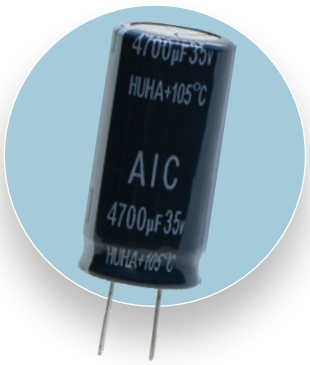

> Outline Drawings · Bauformen

Refer to page 7 for available terminal shapes and dimensions. · Auf Seite 7 finden Sie die verfügbaren Bauformen und Maße.

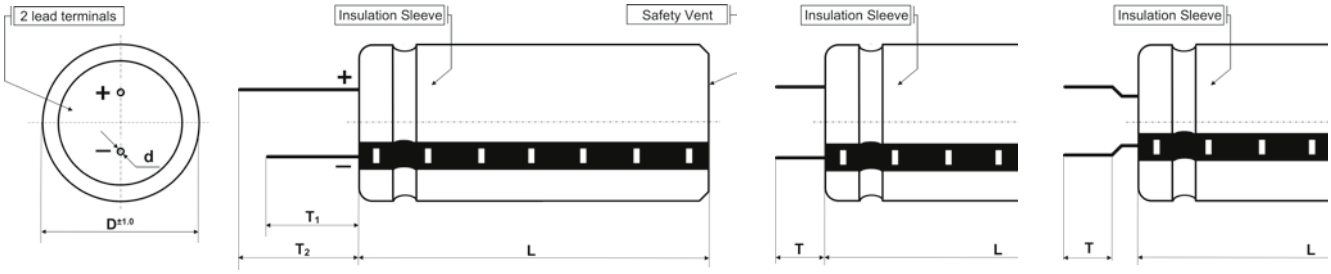

> Product Code · Bestellbezeichnung

Example: Series HUHA · 160 V · 220 µF ± 20 % · 16 x 35.5 mm · Long Lead · without plate

HUHA **2C** **221** **M** **L** **U S4** **WPEC**

Series name

Capacitance code

The first two digits are significant. The last digit indicates the number of following zeros in µF.

Terminal code

- L: long lead
- C: cut 4.5 mm
- D: cut 4.0 mm
- E: cut 3.5 mm
- F: cut 3.0 mm
- T: Taped

Outer design code

WPEC: PET sleeve without plate (standard)

[with plate available on request]

Rated voltage code

Code	L	Code	L
2C	160V	2G	400V
2K	180V	2P	415V
2D	200V	2X	420V
2E	250V	2W	450V
2V	350V	2H	500V
2J	385V		

Capacitance tolerance

M :	± 20 %
K :	± 10 %
Q :	-10 % +30 %
R :	-0 % +20 %
L :	± 15 %
V :	-10 % +20 %

Dimension

Diameter (mm)		Length (mm)	
O	5	S0	< 16
P	6.3	S1	20
Q	8	S2	25 – 29
R	10	S3	30 – 34
S	12.5	S4	35 – 39
U	16	S5	40 – 44
V	18	S6	45 – 49
W	20	S7	50
X	22	S8	55
		S9	60

AIC EUROPE GmbH · Sales & technical support of AIC capacitors · Telefon: +49 (0)2151-4943-5 · E-Mail: info@aic-europe.com · www.aic-europe.com

Rated Voltage (Surge Voltage) V_r [V DC]	Capacitance C_r [µF]	Ripple Current at 105°C/100Hz I_r [A RMS]	ESR max at 20°C/100Hz [Ω]	Dissipation Factor at 20°C/100Hz Tan δ	Leakage current after 1min at 20°C I_{leak} [mA]	DxL [mm]	Product Code # = variable value, see terminal code in the product code
6.3 VDC Code: 0J Surge Voltage 10 VDC	**33**	0.105	8.84	0.22	0.003	5x11.5	HUHA0J330M#OS0WPEC
	47	0.120	6.21	0.22	0.003	5x11.5	HUHA0J470M#OS0WPEC
	100	0.130	2.92	0.22	0.01	5x11.5	HUHA0J101M#OS0WPEC
	220	0.180	1.33	0.22	0.01	5x11.5	HUHA0J221M#OS0WPEC
		0.180	1.33	0.22	0.01	6.3x11.5	HUHA0J221M#PS0WPEC
	330	0.220	0.90	0.22	0.02	6.3x11.5	HUHA0J331M#PS0WPEC
	470	0.250	0.62	0.22	0.03	6.3x11.5	HUHA0J471M#PS0WPEC
		0.315	0.62	0.22	0.03	8x11.5	HUHA0J471M#QS0WPEC
	1 000	0.435	0.29	0.22	0.06	8x11.5	HUHA0J102M#QS0WPEC
		0.500	0.29	0.22	0.06	10x12.5	HUHA0J102M#RS0WPEC
	2 200	0.765	0.15	0.24	0.14	10x20	HUHA0J222M#RS1WPEC
		1.000	0.15	0.24	0.14	12.5x20	HUHA0J222M#SS1WPEC
	3 300	0.882	0.11	0.26	0.21	10x20	HUHA0J332M#RS1WPEC
		1.050	0.11	0.26	0.21	12.5x20	HUHA0J332M#SS1WPEC
	4 700	1.120	0.08	0.28	0.30	12.5x20	HUHA0J472M#SS1WPEC
		1.670	0.08	0.28	0.30	16x25	HUHA0J472M#US2WPEC
	6 800	1.380	0.06	0.32	0.43	12.5x20	HUHA0J682M#SS1WPEC
		1.740	0.06	0.32	0.43	16x25	HUHA0J682M#US2WPEC
	10 000	1.750	0.05	0.40	0.63	16x25	HUHA0J103M#US2WPEC
		2.110	0.05	0.40	0.63	16x31.5	HUHA0J103M#US3WPEC
	15 000	2.040	0.05	0.50	0.95	16x35.5	HUHA0J153M#US4WPEC
		2.580	0.05	0.50	0.95	18x35.5	HUHA0J153M#VS4WPEC
10 VDC Code: 1A Surge Voltage 16 VDC	**22**	0.092	11.50	0.19	0.003	5x11.5	HUHA1A220M#OS0WPEC
	33	0.105	7.64	0.19	0.003	5x11.5	HUHA1A330M#OS0WPEC
	47	0.120	5.40	0.19	0.005	5x11.5	HUHA1A470M#OS0WPEC
	100	0.130	2.52	0.19	0.01	5x11.5	HUHA1A101M#OS0WPEC
	220	0.220	1.15	0.19	0.02	6.3x11.5	HUHA1A221M#PS0WPEC
	330	0.230	0.76	0.19	0.03	6.3x11.5	HUHA1A331M#PS0WPEC
		0.265	0.76	0.19	0.03	8x11.5	HUHA1A331M#QS0WPEC
	470	0.315	0.54	0.19	0.05	8x11.5	HUHA1A471M#QS0WPEC
	1 000	0.500	0.25	0.19	0.10	10x12.5	HUHA1A102M#RS0WPEC
		0.615	0.25	0.19	0.10	10x16	HUHA1A102M#RS0WPEC
	2 200	0.761	0.13	0.21	0.22	10x20	HUHA1A222M#RS1WPEC
		1.050	0.13	0.21	0.22	12.5x20	HUHA1A222M#SS1WPEC
	3 300	1.010	0.09	0.23	0.33	12.5x20	HUHA1A332M#SS1WPEC
		1.300	0.09	0.23	0.33	12.5x25	HUHA1A332M#SS2WPEC
	4 700	1.250	0.07	0.25	0.47	12.5x25	HUHA1A472M#SS2WPEC
		1.740	0.07	0.25	0.47	16x25	HUHA1A472M#US2WPEC
	6 800	1.570	0.06	0.29	0.68	16x25	HUHA1A682M#US2WPEC
		2.110	0.06	0.29	0.68	16x31.5	HUHA1A682M#US3WPEC
	10 000	1.910	0.05	0.37	1.00	16x35.5	HUHA1A103M#US4WPEC
		2.580	0.05	0.37	1.00	18x35.5	HUHA1A103M#VS4WPEC

Additional designs on request · Weitere Designs auf Anfrage

Rated Voltage (Surge Voltage) V_r [V DC]	Capacitance C_r [µF]	Ripple Current at 105°C/100Hz I_r [A RMS]	ESR max at 20°C/100Hz [Ω]	Dissipation Factor at 20°C/100Hz Tan δ	Leakage current after 1min at 20°C I_{leak} [mA]	DxL [mm]	Product Code # = variable value, see terminal code in the product code
16 VDC Code: 1C Surge Voltage 20 VDC	**10**	0.092	21.22	0.16	0.003	5x11.5	HUHA1C100M#OS0WPEC
	22	0.105	9.70	0.16	0.004	5x11.5	HUHA1C220M#OS0WPEC
	33	0.120	6.43	0.16	0.01	5x11.5	HUHA1C330M#OS0WPEC
	47	0.130	4.52	0.16	0.01	5x11.5	HUHA1C470M#OS0WPEC
	100	0.150	2.12	0.16	0.02	5x11.5	HUHA1C101M#OS0WPEC
		0.220	2.12	0.16	0.02	6.3x11.5	HUHA1C101M#PS0WPEC
	220	0.250	0.97	0.16	0.04	6.3x11.5	HUHA1C221M#PS0WPEC
		0.290	0.97	0.16	0.04	8x11.5	HUHA1C221M#QS0WPEC
	330	0.315	0.64	0.16	0.05	8x11.5	HUHA1C331M#QS0WPEC
	470	0.350	0.45	0.16	0.08	8x11.5	HUHA1C471M#QS0WPEC
		0.500	0.45	0.16	0.08	10x12.5	HUHA1C471M#RS0WPEC
	1000	0.610	0.21	0.16	0.16	10x16	HUHA1C102M#RS0WPEC
		0.825	0.21	0.16	0.16	10x20	HUHA1C102M#RS1WPEC
	2 200	0.961	0.11	0.18	0.35	12.5x20	HUHA1C222M#SS1WPEC
		1.300	0.11	0.18	0.35	12.5x25	HUHA1C222M#SS2WPEC
	3 300	1.200	0.08	0.20	0.53	12.5x25	HUHA1C332M#SS2WPEC
		1.740	0.08	0.20	0.53	16x25	HUHA1C332M#US2WPEC
	4 700	1.490	0.06	0.22	0.75	16x25	HUHA1C472M#US2WPEC
		2.110	0.06	0.22	0.75	16x31.5	HUHA1C472M#US3WPEC
	6 800	1.830	0.05	0.26	1.09	16x35.5	HUHA1C682M#US4WPEC
		2.580	0.05	0.26	1.09	18x35.5	HUHA1C682M#VS4WPEC
25 VDC Code: 1E Surge Voltage 32 VDC	**4.7**	0.085	39.51	0.14	0.003	5x11.5	HUHA1E4R7M#OS0WPEC
	10	0.092	18.60	0.14	0.003	5x11.5	HUHA1E100M#OS0WPEC
	22	0.105	8.44	0.14	0.01	5x11.5	HUHA1E220M#OS0WPEC
	33	0.120	5.63	0.14	0.01	5x11.5	HUHA1E330M#OS0WPEC
	47	0.130	4.00	0.14	0.01	5x11.5	HUHA1E470M#OS0WPEC
	100	0.220	1.90	0.14	0.03	6.3x11.5	HUHA1E101M#PS0WPEC
	220	0.315	0.85	0.14	0.06	8x11.5	HUHA1E221M#QS0WPEC
	330	0.500	0.56	0.14	0.08	10x12.5	HUHA1E331M#RS0WPEC
	470	0.429	0.40	0.14	0.12	10x12.5	HUHA1E471M#RS0WPEC
		0.615	0.40	0.14	0.12	10x16	HUHA1E471M#RS0WPEC
	1 000	0.705	0.19	0.14	0.25	10x20	HUHA1E102M#RS1WPEC
		1.050	0.19	0.14	0.25	12.5x20	HUHA1E102M#SS1WPEC
	2 200	1.740	0.10	0.16	0.55	16x25	HUHA1E222M#US2WPEC
	3 300	1.440	0.07	0.18	0.83	16x25	HUHA1E332M#US2WPEC
		2.110	0.07	0.18	0.83	16x31.5	HUHA1E332M#US3WPEC
	4 700	1.880	0.06	0.20	1.18	16x31.5	HUHA1E472M#US3WPEC
		2.580	0.06	0.20	1.18	18x35.5	HUHA1E472M#VS4WPEC
35 VDC Code: 1V Surge Voltage 44 VDC	**4.7**	0.092	33.90	0.12	0.003	5x11.5	HUHA1V4R7M#OS0WPEC
	10	0.105	15.92	0.12	0.004	5x11.5	HUHA1V100M#OS0WPEC
	22	0.120	7.24	0.12	0.01	5x11.5	HUHA1V220M#OS0WPEC
	33	0.130	4.82	0.12	0.01	5x11.5	HUHA1V330M#OS0WPEC
	47	0.090	3.39	0.12	0.02	5x11.5	HUHA1V470M#OS0WPEC
		0.220	3.40	0.12	0.02	6.3x11.5	HUHA1V470M#PS0WPEC

Additional designs on request · Weitere Designs auf Anfrage

Rated Voltage (Surge Voltage) V_r [V DC]	Capacitance C_r [µF]	Ripple Current at 105°C/100Hz I_r [A RMS]	ESR max at 20°C/100Hz [Ω]	Dissipation Factor at 20°C/100Hz Tan δ	Leakage current after 1min at 20°C I_{leak} [mA]	DxL [mm]	Product Code # = variable value, see terminal code in the product code
35 VDC Code: 1V Surge Voltage 44 VDC	**100**	0.151	1.59	0.12	0.04	6.3x11.5	HUHA1V101M#PS0WPEC
		0.315	1.60	0.12	0.04	8x11.5	HUHA1V101M#QS0WPEC
	220	0.500	0.72	0.12	0.08	10x12.5	HUHA1V221M#RS0WPEC
	330	0.384	0.48	0.12	0.12	10x12.5	HUHA1V331M#RS0WPEC
		0.615	0.48	0.12	0.12	10x16	HUHA1V331M#RS0WPEC
	470	0.470	0.34	0.12	0.16	10x16	HUHA1V471M#RS0WPEC
		0.825	0.34	0.12	0.16	10x20	HUHA1V471M#RS1WPEC
	1 000	0.857	0.16	0.12	0.35	12.5x20	HUHA1V102M#SS1WPEC
		1.300	0.16	0.12	0.35	12.5x25	HUHA1V102M#SS2WPEC
	2 200	1.380	0.09	0.14	0.77	16x25	HUHA1V222M#US2WPEC
		2.110	0.09	0.14	0.77	16x31.5	HUHA1V222M#US3WPEC
	3 300	1.780	0.07	0.16	1.16	16x35.5	HUHA1V332M#US4WPEC
		2.580	0.07	0.16	1.16	18x35.5	HUHA1V332M#VS4WPEC
	4 700	2.120	0.05	0.18	1.65	18x35.5	HUHA1V472M#VS4WPEC
50 VDC Code: 1H Surge Voltage 63 VDC	**0.10**	0.010	1327.00	0.10	0.003	5x11.5	HUHA1H0R1M#OS0WPEC
	0.22	0.015	603.00	0.10	0.003	5x11.5	HUHA1H0R2M#OS0WPEC
	0.33	0.018	402.00	0.10	0.003	5x11.5	HUHA1H0R3M#OS0WPEC
	0.47	0.023	282.19	0.10	0.003	5x11.5	HUHA1H0R4M#OS0WPEC
	1.0	0.035	133.00	0.10	0.003	5x11.5	HUHA1H1R0M#OS0WPEC
	2.2	0.053	60.29	0.10	0.003	5x11.5	HUHA1H2R2M#OS0WPEC
	3.3	0.065	40.19	0.10	0.003	5x11.5	HUHA1H3R3M#OS0WPEC
	4.7	0.082	28.22	0.10	0.003	5x11.5	HUHA1H4R7M#OS0WPEC
	10	0.100	13.26	0.10	0.01	5x11.5	HUHA1H100M#OS0WPEC
	22	0.125	6.03	0.10	0.01	5x11.5	HUHA1H220M#OS0WPEC
	33	0.090	4.02	0.10	0.02	5x11.5	HUHA1H330M#OS0WPEC
		0.195	4.02	0.10	0.02	6.3x11.5	HUHA1H330M#PS0WPEC
	47	0.245	2.82	0.10	0.02	6.3x11.5	HUHA1H470M#PS0WPEC
	100	0.385	1.33	0.10	0.05	8x11.5	HUHA1H101M#QS0WPEC
	220	0.314	0.60	0.10	0.11	10x12.5	HUHA1H221M#RS0WPEC
		0.505	0.60	0.10	0.11	10x16	HUHA1H221M#RS0WPEC
	330	0.421	0.40	0.10	0.17	10x16	HUHA1H331M#RS0WPEC
		0.675	0.40	0.10	0.17	10x20	HUHA1H331M#RS1WPEC
	470	0.895	0.28	0.10	0.24	12.5x20	HUHA1H471M#SS1WPEC
	1 000	1.495	0.13	0.10	0.50	16x25	HUHA1H102M#US2WPEC
	2 200	1.660	0.07	0.12	1.10	16x35.5	HUHA1H222M#US4WPEC
		2.190	0.07	0.12	1.10	18x35.5	HUHA1H222M#VS4WPEC
63 VDC Code: 1J Surge Voltage 79 VDC	**4.7**	0.074	25.40	0.09	0.003	5x11.5	HUHA1J4R7M#OS0WPEC
	10	0.095	12.00	0.09	0.01	5x11.5	HUHA1J100M#OS0WPEC
	22	0.130	5.43	0.09	0.01	6.3x11.5	HUHA1J220M#PS0WPEC
	33	0.160	4.00	0.09	0.02	6.3x11.5	HUHA1J330M#PS0WPEC
	47	0.120	2.54	0.09	0.03	6.3x11.5	HUHA1J470M#PS0WPEC
		0.305	2.54	0.09	0.03	8x11.5	HUHA1J470M#QS0WPEC
	100	0.395	1.20	0.09	0.06	10x12.5	HUHA1J101M#RS0WPEC
	220	0.335	0.54	0.09	0.14	10x16	HUHA1J221M#RS0WPEC

Additional designs on request · Weitere Designs auf Anfrage

Rated Voltage (Surge Voltage) V_r [V DC]	Capacitance C_r [µF]	Ripple Current at 105°C/100Hz I_r [A RMS]	ESR max at 20°C/100Hz [Ω]	Dissipation Factor at 20°C/100Hz Tan δ	Leakage current after 1min at 20°C I_{leak} [mA]	DxL [mm]	Product Code # = variable value, see terminal code in the product code
63 VDC Code: 1J Surge Voltage 79 VDC	**220**	0.505	0.54	0.09	0.14	10x20	HUHA1J221M#RS1WPEC
	330	0.510	0.36	0.09	0.21	10x20	HUHA1J331M#RS1WPEC
		0.660	0.36	0.09	0.21	12.5x20	HUHA1J331M#SS1WPEC
	470	0.640	0.25	0.09	0.30	12.5x20	HUHA1J471M#SS1WPEC
		0.850	0.25	0.09	0.30	12.5x25	HUHA1J471M#SS2WPEC
	1 000	0.930	0.12	0.09	0.63	16x25	HUHA1J102M#US2WPEC
		1.430	0.12	0.09	0.63	16x31.5	HUHA1J102M#US3WPEC
100 VDC Code: 2A Surge Voltage 125 VDC	**0.47**	0.030	226.00	0.08	0.003	5x11.5	HUHA2A0R4M#OS0WPEC
	1.0	0.045	106.10	0.08	0.003	5x11.5	HUHA2A1R0M#OS0WPEC
	2.2	0.060	48.23	0.08	0.003	5x11.5	HUHA2A2R2M#OS0WPEC
	3.3	0.067	32.15	0.08	0.003	5x11.5	HUHA2A3R3M#OS0WPEC
	4.7	0.075	23.00	0.08	0.005	5x11.5	HUHA2A4R7M#OS0WPEC
	10	0.110	11.00	0.08	0.01	6.3x11.5	HUHA2A100M#PS0WPEC
	22	0.093	4.82	0.08	0.02	6.3x11.5	HUHA2A220M#PS0WPEC
		0.165	5.00	0.08	0.02	8x11.5	HUHA2A220M#QS0WPEC
	33	0.130	3.22	0.08	0.03	8x11.5	HUHA2A330M#QS0WPEC
		0.305	3.22	0.08	0.03	10x12.5	HUHA2A330M#RS0WPEC
	47	0.165	2.26	0.08	0.05	10x12.5	HUHA2A470M#RS0WPEC
		0.320	2.30	0.08	0.05	10x16	HUHA2A470M#RS0WPEC
	100	0.265	1.06	0.08	0.10	10x20	HUHA2A101M#RS1WPEC
		0.585	1.10	0.08	0.10	12.5x20	HUHA2A101M#SS1WPEC
	220	0.440	0.48	0.08	0.22	12.5x25	HUHA2A221M#SS2WPEC
		1.120	0.48	0.08	0.22	16x25	HUHA2A221M#US2WPEC
	330	1.290	0.32	0.08	0.33	16x25	HUHA2A331M#US2WPEC
	470	1.350	0.23	0.08	0.47	16x31.5	HUHA2A471M#US3WPEC
160 VDC Code: 2C Surge Voltage 200 VDC	**0.47**	0.012	423.50	0.15	0.05	6.3x11.5	HUHA2C0R4M#PS0WPEC
	1.0	0.018	199.00	0.15	0.06	6.3x11.5	HUHA2C1R0M#PS0WPEC
	2.2	0.026	90.50	0.15	0.08	6.3x11.5	HUHA2C2R2M#PS0WPEC
	3.3	0.028	60.29	0.15	0.09	6.3x11.5	HUHA2C3R3M#PS0WPEC
		0.037	60.30	0.15	0.09	8x11.5	HUHA2C3R3M#QS0WPEC
	4.7	0.034	42.33	0.15	0.12	6.3x11.5	HUHA2C4R7M#PS0WPEC
		0.044	42.33	0.15	0.12	8x11.5	HUHA2C4R7M#QS0WPEC
	10	0.058	19.90	0.15	0.16	8x11.5	HUHA2C100M#QS0WPEC
		0.075	19.90	0.15	0.16	10x12.5	HUHA2C100M#RS0WPEC
	22	0.135	9.05	0.15	0.24	10x16	HUHA2C220M#RS0WPEC
	33	0.175	6.03	0.15	0.31	10x20	HUHA2C330M#RS1WPEC
	47	0.230	4.24	0.15	0.40	12.5x20	HUHA2C470M#SS1WPEC
	100	0.299	1.99	0.15	0.74	12.5x25	HUHA2C101M#SS2WPEC
		0.330	2.00	0.15	0.74	16x25.5	HUHA2C101M#US2WPEC
200 VDC Code: 2D Surge Voltage 250 VDC	**0.47**	0.012	423.50	0.15	0.05	6.3x11.5	HUHA2D0R4M#PS0WPEC
	1.0	0.018	199.00	0.15	0.06	6.3x11.5	HUHA2D1R0M#PS0WPEC
	2.2	0.026	90.50	0.15	0.08	6.3x11.5	HUHA2D2R2M#PS0WPEC
	3.3	0.028	60.29	0.15	0.11	6.3x11.5	HUHA2D3R3M#PS0WPEC
		0.037	60.30	0.15	0.11	8x11.5	HUHA2D3R3M#QS0WPEC
	4.7	0.040	42.33	0.15	0.13	8x11.5	HUHA2D4R7M#QS0WPEC

Additional designs on request · Weitere Designs auf Anfrage

Rated Voltage (Surge Voltage) V_r [V DC]	Capacitance C_r [µF]	Ripple Current at 105°C/100Hz I_r [A RMS]	ESR max at 20°C/100Hz [Ω]	Dissipation Factor at 20°C/100Hz Tan δ	Leakage current after 1min at 20°C I_{leak} [mA]	DxL [mm]	Product Code # = variable value, see terminal code in the product code
200 VDC Code: 2D Surge Voltage 250 VDC	**4.7**	0.050	42.33	0.15	0.13	10x12.5	HUHA2D4R7M#RS0WPEC
	10	0.066	19.90	0.15	0.18	10x12.5	HUHA2D100M#RS0WPEC
		0.080	19.90	0.15	0.18	10x16	HUHA2D100M#RS0WPEC
	22	0.135	9.05	0.15	0.28	10x20	HUHA2D220M#RS1WPEC
	33	0.190	6.03	0.15	0.36	12.5x20	HUHA2D330M#SS1WPEC
	47	0.230	4.24	0.15	0.48	12.5x25	HUHA2D470M#SS2WPEC
	100	0.360	1.99	0.15	0.90	16x25.5	HUHA2D101M#US2WPEC
	220	0.525	0.91	0.15	1.86	18x31.5	HUHA2D221M#VS3WPEC
250 VDC Code: 2E Surge Voltage 300 VDC	**0.47**	0.012	423.50	0.15	0.05	6.3x11.5	HUHA2E0R4M#PS0WPEC
	1.0	0.018	199.00	0.15	0.07	6.3x11.5	HUHA2E1R0M#PS0WPEC
	2.2	0.023	90.43	0.15	0.10	6.3x11.5	HUHA2E2R2M#PS0WPEC
		0.030	90.50	0.15	0.10	8x11.5	HUHA2E2R2M#QS0WPEC
	3.3	0.043	60.30	0.15	0.12	8x11.5	HUHA2E3R3M#QS0WPEC
		0.043	60.29	0.15	0.12	10x12.5	HUHA2E3R3M#RS0WPEC
	4.7	0.040	42.33	0.15	0.15	8x11.5	HUHA2E4R7M#QS0WPEC
		0.050	42.66	0.15	0.15	10x12.5	HUHA2E4R7M#RS0WPEC
	10	0.090	19.90	0.15	0.20	10x16	HUHA2E100M#RS0WPEC
	22	0.155	9.05	0.15	0.32	12.5x20	HUHA2E220M#SS1WPEC
	33	0.190	6.03	0.15	0.43	12.5x25	HUHA2E330M#SS2WPEC
	47	0.205	4.24	0.15	0.57	12.5x25	HUHA2E470M#SS2WPEC
		0.225	4.24	0.15	0.57	16x25.5	HUHA2E470M#US2WPEC
	100	0.340	1.99	0.15	1.10	16x31.5	HUHA2E101M#US3WPEC
	150	0.405	1.30	0.15	1.60	18x25.5	HUHA2E151M#VS2WPEC
	220	0.570	0.90	0.15	2.30	18x36	HUHA2E221M#VS4WPEC
350 VDC Code: 2V Surge Voltage 400 VDC	**0.47**	0.011	565.00	0.15	0.06	6.3x11.5	HUHA2V0R4M#PS0WPEC
	1.0	0.018	265.50	0.15	0.08	8x11.5	HUHA2V1R0M#QS0WPEC
	2.2	0.030	120.58	0.20	0.12	8x11.5	HUHA2V2R2M#QS0WPEC
		0.030	120.60	0.20	0.12	10x12.5	HUHA2V2R2M#RS0WPEC
	3.3	0.036	80.40	0.20	0.15	10x12.5	HUHA2V3R3M#RS0WPEC
	4.7	0.045	56.44	0.20	0.17	10x12.5	HUHA2V4R7M#RS0WPEC
		0.047	56.50	0.20	0.17	10x16	HUHA2V4R7M#RS0WPEC
	10	0.095	26.53	0.20	0.24	10x20	HUHA2V100M#RS1WPEC
	22	0.130	12.10	0.20	0.41	12.5x20	HUHA2V220M#SS1WPEC
	33	0.180	8.00	0.20	0.56	12.5x25	HUHA2V330M#SS2WPEC
		0.160	8.04	0.20	0.56	16x25.5	HUHA2V330M#US2WPEC
	47	0.330	5.65	0.20	0.76	16x25.5	HUHA2V470M#US2WPEC
	100	0.620	3.00	0.20	1.50	18x31.5	HUHA2V101M#VS3WPEC
400 VDC Code: 2G Surge Voltage 450 VDC	**1.0**	0.016	265.26	0.20	0.08	6.3x11.5	HUHA2G1R0M#PS0WPEC
		0.018	265.40	0.20	0.08	8x11.5	HUHA2G1R0M#QS0WPEC
	2.2	0.025	120.58	0.20	0.13	8x11.5	HUHA2G2R2M#QS0WPEC
		0.030	120.60	0.20	0.13	10x12.5	HUHA2G2R2M#RS0WPEC
	3.3	0.035	80.39	0.20	0.15	10x12.5	HUHA2G3R3M#RS0WPEC
		0.040	80.40	0.20	0.15	10x16	HUHA2G3R3M#RS0WPEC
	4.7	0.047	56.80	0.20	0.18	10x12.5	HUHA2G4R7M#RS0WPEC
		0.052	56.44	0.20	0.18	10x16	HUHA2G4R7M#RS0WPEC

Additional designs on request · Weitere Designs auf Anfrage

Rated Voltage (Surge Voltage) V_r [V DC]	Capacitance C_r [µF]	Ripple Current at 105°C/100Hz I_r [A RMS]	ESR max at 20°C/100Hz [Ω]	Dissipation Factor at 20°C/100Hz Tan δ	Leakage current after 1min at 20°C I_{leak} [mA]	DxL [mm]	Product Code # = variable value, see terminal code in the product code
400 VDC Code: 2G Surge Voltage 450 VDC	**10**	0.080	26.50	0.20	0.26	10x16	HUHA2G100M#RS0WPEC
		0.095	26.50	0.20	0.26	10x20	HUHA2G100M#RS1WPEC
		0.120	26.53	0.20	0.26	12.5x20	HUHA2G100M#SS1WPEC
	22	0.150	12.10	0.20	0.45	12.5x25	HUHA2G220M#SS2WPEC
		0.150	12.06	0.20	0.45	16x25.5	HUHA2G220M#US2WPEC
	33	0.180	8.00	0.20	0.63	12.5x25	HUHA2G330M#SS2WPEC
		0.180	8.00	0.20	0.63	16x20	HUHA2G330M#US1WPEC
		0.215	8.10	0.20	0.63	16x25.5	HUHA2G330M#US2WPEC
	47	0.360	5.65	0.20	0.85	16x25.5	HUHA2G470M#US2WPEC
	68	0.470	3.90	0.20	1.19	18x25.5	HUHA2G680M#VS2WPEC
	82	0.575	3.20	0.20	1.41	18x31.5	HUHA2G820M#VS3WPEC
	100	0.675	2.70	0.20	1.70	18x36	HUHA2G101M#VS4WPEC
	120	0.735	2.20	0.20	2.02	18x40	HUHA2G121M#VS5WPEC
	150	0.825	1.80	0.20	2.50	20x41	HUHA2G151M#WS5WPEC
420 VDC Code: 2X Surge Voltage 500 VDC	**1.0**	0.016	265.40	0.20	0.08	8x11.5	HUHA2X1R0M#QS0WPEC
		0.019	265.40	0.20	0.08	10x12.5	HUHA2X1R0M#RS0WPEC
	2.2	0.024	120.60	0.20	0.13	8x11.5	HUHA2X2R2M#QS0WPEC
		0.029	120.60	0.20	0.13	10x12.5	HUHA2X2R2M#RS0WPEC
	3.3	0.034	80.40	0.20	0.16	10x12.5	HUHA2X3R3M#RS0WPEC
		0.038	80.40	0.20	0.16	10x16	HUHA2X3R3M#RS0WPEC
	4.7	0.046	56.40	0.20	0.18	10x16	HUHA2X4R7M#RS0WPEC
		0.052	56.50	0.20	0.18	10x20	HUHA2X4R7M#RS1WPEC
	10	0.100	26.50	0.20	0.27	10x20	HUHA2X100M#RS1WPEC
		0.116	26.50	0.20	0.27	12.5x20	HUHA2X100M#SS1WPEC
	22	0.162	12.10	0.20	0.47	12.5x25	HUHA2X220M#SS2WPEC
	33	0.204	8.00	0.20	0.66	16x20	HUHA2X330M#US1WPEC
		0.228	8.00	0.20	0.66	16x25.5	HUHA2X330M#US2WPEC
	47	0.380	5.60	0.20	0.89	16x31.5	HUHA2X470M#US3WPEC
	56	0.420	4.70	0.20	1.04	16x31.5	HUHA2X560M#US3WPEC
		0.420	4.70	0.20	1.04	18x25.5	HUHA2X560M#VS2WPEC
	68	0.542	3.90	0.20	1.24	16x36	HUHA2X680M#US4WPEC
		0.542	3.90	0.20	1.24	18x31.5	HUHA2X680M#VS3WPEC
	82	0.608	3.20	0.20	1.48	16x40	HUHA2X820M#US5WPEC
		0.608	3.20	0.20	1.48	18x31.5	HUHA2X820M#VS3WPEC
	100	0.713	2.70	0.20	1.78	16x45	HUHA2X101M#US6WPEC
		0.713	2.70	0.20	1.78	18x36	HUHA2X101M#VS4WPEC
	120	0.779	2.20	0.20	2.12	16x50	HUHA2X121M#US7WPEC
		0.779	2.20	0.20	2.12	18x40	HUHA2X121M#VS5WPEC
	150	0.874	1.80	0.20	2.62	16x60	HUHA2X151M#US9WPEC
		0.874	1.80	0.20	2.62	20x41	HUHA2X151M#WS5WPEC
450 VDC Code: 2W Surge Voltage 500 VDC	**1.0**	0.016	265.26	0.20	0.09	8x11.5	HUHA2W1R0M#QS0WPEC
		0.019	265.40	0.20	0.09	10x12.5	HUHA2W1R0M#RS0WPEC
	2.2	0.026	121.00	0.20	0.14	10x12.5	HUHA2W2R2M#RS0WPEC
		0.029	120.60	0.20	0.14	10x16	HUHA2W2R2M#RS0WPEC
	3.3	0.038	80.40	0.20	0.16	10x16	HUHA2W3R3M#RS0WPEC

Additional designs on request · Weitere Designs auf Anfrage

Rated Voltage (Surge Voltage) V_r [V DC]	Capacitance C_r [µF]	Ripple Current at 105°C/100Hz I_r [A RMS]	ESR max at 20°C/100Hz [Ω]	Dissipation Factor at 20°C/100Hz Tan δ	Leakage current after 1min at 20°C I_{leak} [mA]	DxL [mm]	Product Code # = variable value, see terminal code in the product code
450 VDC Code: 2W Surge Voltage 500 VDC	**3.3**	0.042	80.40	0.20	0.16	10x20	HUHA2W3R3M#RS1WPEC
	4.7	0.049	56.50	0.20	0.19	10x16	HUHA2W4R7M#RS0WPEC
		0.054	56.50	0.20	0.19	10x20	HUHA2W4R7M#RS1WPEC
	10	0.120	26.53	0.20	0.28	10x20	HUHA2W100M#RS1WPEC
	22	0.170	12.10	0.20	0.50	12.5x25	HUHA2W220M#SS2WPEC
	33	0.240	8.04	0.20	0.69	16x25.5	HUHA2W330M#US2WPEC
	47	0.400	5.60	0.20	0.95	16x31.5	HUHA2W470M#US3WPEC
	56	0.440	4.70	0.20	1.11	16x31.5	HUHA2W560M#US3WPEC
		0.440	4.70	0.20	1.11	18x25.5	HUHA2W560M#VS2WPEC
	68	0.490	4.00	0.20	1.32	16x36	HUHA2W680M#US4WPEC
		0.570	3.90	0.20	1.32	18x31.5	HUHA2W680M#VS3WPEC
	82	0.640	3.20	0.20	1.58	16x40	HUHA2W820M#US5WPEC
		0.640	3.20	0.20	1.58	18x31.5	HUHA2W820M#VS3WPEC
	100	0.750	2.70	0.20	1.90	16x45	HUHA2W101M#US6WPEC
		0.750	2.70	0.20	1.90	18x36	HUHA2W101M#VS4WPEC
	120	0.820	2.20	0.20	2.26	16x50	HUHA2W121M#US7WPEC
		0.820	2.20	0.20	2.26	18x40	HUHA2W121M#VS5WPEC
	150	0.920	1.80	0.20	2.80	16x60	HUHA2W151M#US9WPEC
		0.920	1.80	0.20	2.80	18x46	HUHA2W151M#VS6WPEC
		0.920	1.80	0.20	2.80	20x41	HUHA2W151M#WS5WPEC
	180	1.100	1.50	0.20	3.34	22x41	HUHA2W181M#XS5WPEC
	220	1.200	1.20	0.20	4.06	22x45	HUHA2W221M#XS6WPEC
500 VDC Code: 2H Surge Voltage 550 VDC	**1.0**	0.021	265.40	0.20	0.09	10x12.5	HUHA2H1R0M#RS0WPEC
	2.2	0.035	120.60	0.20	0.14	10x16	HUHA2H2R2M#RS0WPEC
	3.3	0.048	80.40	0.20	0.17	10x20	HUHA2H3R3M#RS1WPEC
	4.7	0.063	56.50	0.20	0.19	12.5x20	HUHA2H4R7M#SS1WPEC
	10	0.120	26.50	0.20	0.30	12.5x25	HUHA2H100M#SS2WPEC
	22	0.180	12.10	0.20	0.54	16x25.5	HUHA2H220M#US2WPEC
	33	0.240	8.00	0.20	0.76	16x31.5	HUHA2H330M#US3WPEC
	47	0.405	5.60	0.20	1.04	18x31.5	HUHA2H470M#VS3WPEC
	56	0.450	4.70	0.20	1.22	16x40	HUHA2H560M#US5WPEC
		0.450	4.70	0.20	1.22	18x31.5	HUHA2H560M#VS3WPEC
	68	0.560	3.90	0.20	1.46	16x45	HUHA2H680M#US6WPEC
		0.560	3.90	0.20	1.46	18x36	HUHA2H680M#VS4WPEC
	82	0.640	3.20	0.20	1.74	16x55	HUHA2H820M#US8WPEC
		0.640	3.20	0.20	1.74	18x40	HUHA2H820M#VS5WPEC
	100	0.800	2.70	0.20	2.10	16x60	HUHA2H101M#US9WPEC
		0.800	2.70	0.20	2.10	18x46	HUHA2H101M#VS6WPEC
		0.800	2.70	0.20	2.10	20x41	HUHA2H101M#WS5WPEC
	120	0.840	2.20	0.20	2.50	22x45	HUHA2H121M#XS6WPEC
	150	0.890	1.80	0.20	3.10	22x45	HUHA2H151M#XS6WPEC

Additional designs on request · Weitere Designs auf Anfrage

> Ripple Current Multiplier · Wechselstrommultiplikator

Rated Voltage	Capacitance (µF)	50/60	100-120	1 k	10 k	100 k
6.3 V – 100 V	≤ 4.7	0.32	0.40	0.70	0.80	1.00
	10 – 47	0.40	0.50	0.80	0.90	1.00
	100 – 220	0.56	0.70	0.90	0.90	1.00
	330 – 1 000	0.64	0.80	0.90	1.00	1.00
	≥ 2 200	0.72	0.90	1.00	1.00	1.00
160 V – 500 V	≤ 10	0.80	1.00	1.75	2.00	2.50
	22 – 56	0.80	1.00	1.60	1.80	2.00
	≥ 68	0.80	1.00	1.30	1.40	1.65

Temperature [°C]		40	45	50	55	60	65	70	75	80	85	90	95	100	105
Multiplier I_r at 100 kHz	6.3 V – 100 V	2.20	2.18	2.16	2.13	2.10	2.00	1.93	1.86	1.78	1.70	1.55	1.40	1.25	1.00
	160 V – 500 V	2.00	1.98	1.96	1.93	1.90	1.86	1.80	1.70	1.60	1.50	1.40	1.30	1.20	1.00

> Impedance Stability · Impedanz Stabilität

Rated Voltage [V]	6.3	10	16	25	35	50	63	100	160	200	250	350	400	420	450	500
$Z_{-25°C}$ / $Z_{+20°C}$ at 120 Hz	4	3	2						3							6
$Z_{-40°C}$ / $Z_{+20°C}$ at 120 Hz	8	6	4	3					8			–				–

> Life Time Tests and Requirements · Anforderungen Brauchbarkeitsdauer

Life time test	Test procedure	Life time criteria
Endurance test	T_a = 105 °C; V_r, I_r applied 2000 hours	ΔC/C ≤ 20 % (of initial value) Tanδ ≤ 200 % (of specified value) I_L ≤ specified value
Useful life	T_a = 105 °C; V_r, I_r applied 3000 hours	ΔC/C ≤ 30 % (of initial value) Tanδ < 300 % (of specified value) I_L ≤ specified value

Reference Specification: IEC 60384-4

> Life Time Table and Graph · Brauchbarkeitsdauer – Tabelle und Diagramm

Rated voltage range 6.3 V–100 V

HUHA	Ripple Current Multiplier I_r at 100 kHz														
T_a	1.00	1.10	1.25	1.40	1.55	1.70	1.78	1.86	1.93	2.00	2.10	2.13	2.16	2.18	2.20
40°C	200	200	184	140	103	73	60	49	41	34	26	23	21	20	19
45°C	192	166	130	99	73	52	43	35	29	24	18	17	15	14	
50°C	136	117	92	70	51	37	30	25	21	17	13	12	11		
55°C	96	83	65	49	36	26	21	17	15	12	9	8			
60°C	68	59	46	35	26	18	15	12	10	8	6				
65°C	48	41	33	25	18	13	11	9	7	6					
70°C	34	29	23	17	13	9	8	6	5						
75°C	24	21	16	12	9	6	5	4							
80°C	17	15	11	9	6	5	4								
85°C	12	10	8	6	5	3									
90°C	8	7	6	4	3										
95°C	6	5	4	3											
100°C	4	4	3												
105°C	3														

khrs Max. value limited to 200 000 hours.

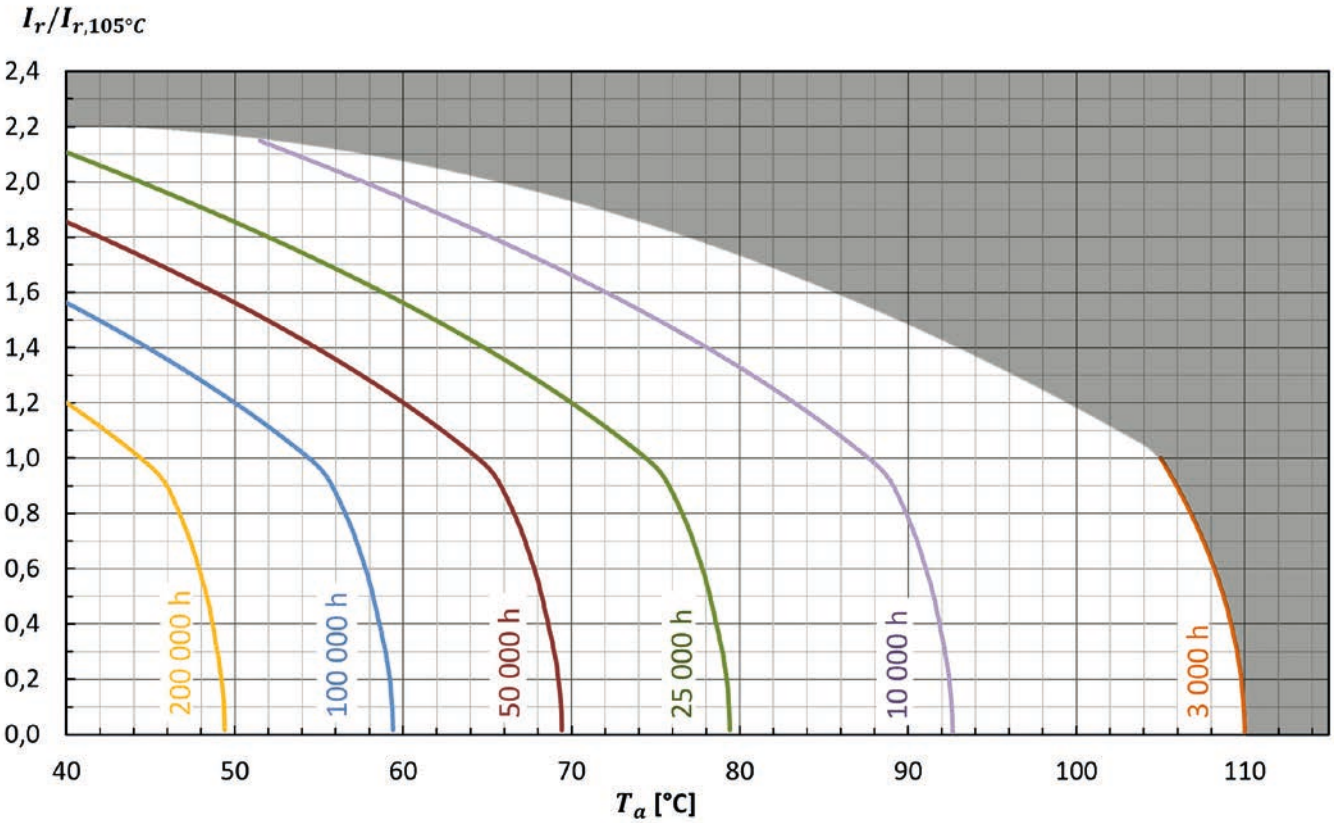

> Life Time Table and Graph · Brauchbarkeitsdauer – Tabelle und Diagramm

Rated voltage range 160 V – 500 V

HUHA	Ripple Current Multiplier I_r at 100 kHz														
T_a	1.00	1.10	1.20	1.30	1.40	1.50	1.60	1.70	1.80	1.86	1.90	1.93	1.96	1.98	2.00
40°C	200	200	200	168	140	114	92	73	57	49	44	41	38	36	34
45°C	192	166	142	119	99	81	65	52	41	35	31	29	27	25	
50°C	136	117	100	84	70	57	46	37	29	25	22	21	19		
55°C	96	83	71	60	49	40	33	26	20	17	16	15			
60°C	68	59	50	42	35	29	23	18	14	12	11				
65°C	48	41	35	30	25	20	16	13	10	9					
70°C	34	29	25	21	17	14	12	9	7						
75°C	24	21	18	15	12	10	8	6							
80°C	17	15	13	11	9	7	6								
85°C	12	10	9	7	6	5									
90°C	8	7	6	5	4										
95°C	6	5	4	4											
100°C	4	4	3												
105°C	3														

khrs Max. value limited to 250 000 hours.

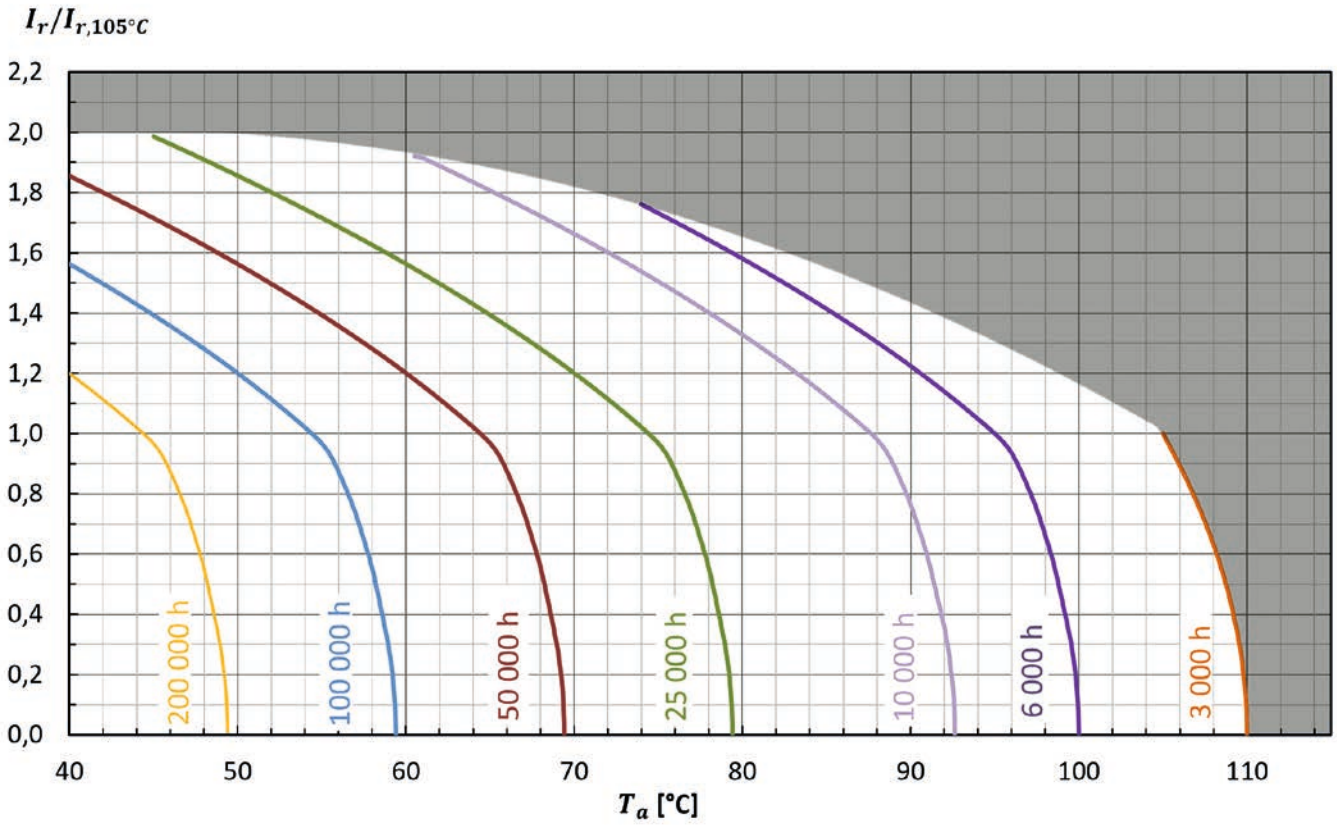

HLHA · Radial · 14000 h/105 °C

Compact Design · Very Long Life

› Specifications · Spezifikationen

Items	Characteristics
Temperature range	-40 °C ~ + 105 °C
Capacitance tolerance (at 20 °C)	Standard +/- 20 % at 20 °C
Surge voltage	Repetitive max. 30 sec per 6 Minutes, 1000 times
Leakage current max. I_L (20 °C, 1 min)	Refer to the specific item value in product table
Useful life	12 000 hours at 105 °C; I_r, V_r, length L < 25 mm 14 000 hours at 105 °C; I_r, V_r, length L ≥ 25 mm
Shelf life	1000 hours at 105 °C, $I_r = V_r = 0$
Reference standards	IEC 60384-4
Vibration	0.75 mm, 10...55 Hz, 10 g, 3x2 h
Product Compliance	RoHS, REACH, Conflict Minerals a.o. - refer to p. 14–15

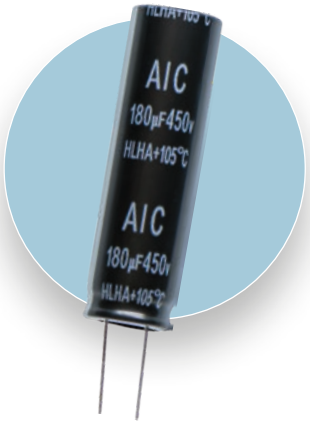

› Outline Drawings · Bauformen

Refer to page 7 for available terminal shapes and dimensions. · Auf Seite 7 finden Sie die verfügbaren Bauformen und Maße.

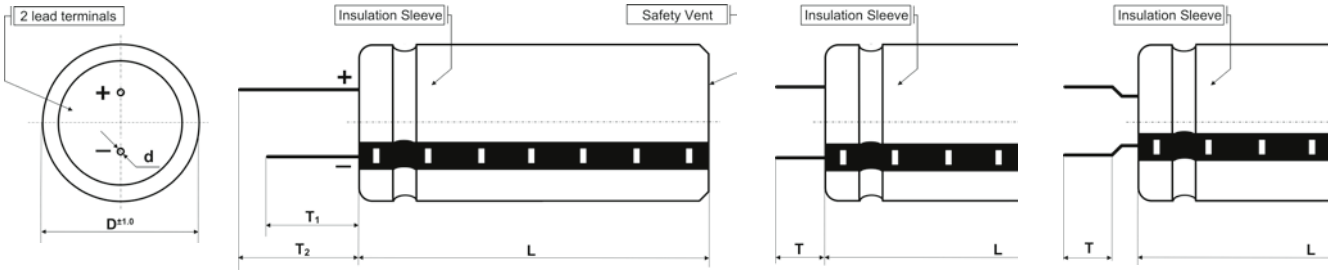

› Product Code · Bestellbezeichnung

Example: Series HLHA · 420 V · 120 µF ± 20 % · 18 x 40 mm · 4.5 mm lead · without plate

HLHA **2X** **121** **M** **C** **V S5** **WPEC**

Series name

Capacitance code

The first two digits are significant. The last digit indicates the number of following zeros in µF.

Terminal code

- L: long lead
- C: cut 4.5 mm
- D: cut 4.0 mm
- E: cut 3.5 mm
- F: cut 3.0 mm
- T: Taped

Outer design code

WPEC: PET sleeve without plate (standard)

[with plate available on request]

Rated voltage code

Code	L	Code	L
2C	160V	2G	400V
2K	180V	2P	415V
2D	200V	2X	420V
2E	250V	2W	450V
2V	350V	2H	500V
2J	385V		

Capacitance tolerance

M :	± 20 %
K :	± 10 %
Q :	-10 % +30 %
R :	-0 % +20 %
L :	± 15 %
V :	-10 % +20 %

Dimension

Diameter (mm)		Length (mm)	
R	10	S0	15–19
S	12.5	S1	20–24
U	16	S2	25–29
V	18	S3	30–34
		S4	35–39
		S5	40
		S6	45
		S7	50

Rated Voltage (Surge Voltage) V_r [V DC]	Capacitance C_r [µF]	Ripple Current at 105°C/100Hz I_r [A RMS]	ESR (typ) at 20°C/100Hz [Ω]	ESR max at 20°C/100Hz [Ω]	Dissipation Factor at 20°C/100Hz Tan δ	Leakage current after 1min at 20°C I_{leak} [mA]	DxL [mm]	Product Code # = variable value, see terminal code in the product code
160 VDC Code: 2C Surge Voltage 200 VDC	**47**	0.65	1.69	4.23	0.15	0.40	10x16	HLHA2C470M#RS0WPEC
	68	0.80	1.17	2.93	0.15	0.54	10x20	HLHA2C680M#RS1WPEC
	82	1.04	0.97	2.43	0.15	0.62	10x25	HLHA2C820M#RS2WPEC
	100	1.19	0.80	1.99	0.15	0.74	10x30	HLHA2C101M#RS3WPEC
		1.35	0.80	1.99	0.15	0.74	12.5x20	HLHA2C101M#SS1WPEC
	120	1.40	0.66	1.66	0.15	0.87	10x35	HLHA2C121M#RS4WPEC
	150	1.58	0.53	1.33	0.15	1.06	10x40	HLHA2C151M#RS5WPEC
		1.64	0.53	1.33	0.15	1.06	12.5x25	HLHA2C151M#SS2WPEC
	180	1.80	0.44	1.11	0.15	1.25	10x50	HLHA2C181M#RS7WPEC
		1.96	0.44	1.11	0.15	1.25	12.5x30	HLHA2C181M#SS3WPEC
		1.80	0.44	1.11	0.15	1.25	16x20	HLHA2C181M#US1WPEC
	220	2.25	0.36	0.90	0.15	1.51	12.5x35	HLHA2C221M#SS4WPEC
		2.25	0.36	0.90	0.15	1.51	16x25.5	HLHA2C221M#US2WPEC
		2.23	0.36	0.90	0.15	1.51	18x20.5	HLHA2C221M#VS1WPEC
	270	2.24	0.29	0.74	0.15	1.83	12.5x40	HLHA2C271M#SS5WPEC
		2.42	0.29	0.74	0.15	1.83	16x31.5	HLHA2C271M#US3WPEC
	330	2.80	0.24	0.60	0.15	2.21	12.5x50	HLHA2C331M#SS7WPEC
		2.70	0.24	0.60	0.15	2.21	16x31.5	HLHA2C331M#US3WPEC
		2.36	0.24	0.60	0.15	2.21	18x25.5	HLHA2C331M#VS2WPEC
	390	2.76	0.20	0.51	0.15	2.60	16x36	HLHA2C391M#US4WPEC
	470	3.10	0.17	0.42	0.15	3.11	16x40	HLHA2C471M#US5WPEC
		3.10	0.17	0.42	0.15	3.11	18x31.5	HLHA2C471M#VS3WPEC
	560	3.72	0.14	0.36	0.15	3.68	16x50	HLHA2C561M#US7WPEC
		3.68	0.14	0.36	0.15	3.68	18x40	HLHA2C561M#VS5WPEC
	680	4.26	0.12	0.29	0.15	4.45	18x45	HLHA2C681M#VS6WPEC
	820	4.46	0.10	0.24	0.15	5.35	18x50	HLHA2C821M#VS7WPEC
200 VDC Code: 2D Surge Voltage 250 VDC	**33**	0.65	2.41	6.03	0.15	0.36	10x16	HLHA2D330M#RS0WPEC
	47	0.80	1.69	4.23	0.15	0.48	10x20	HLHA2D470M#RS1WPEC
	56	1.04	1.42	3.55	0.15	0.55	10x25	HLHA2D560M#RS2WPEC
	68	1.08	1.17	2.93	0.15	0.64	10x25	HLHA2D680M#RS2WPEC
		1.35	1.17	2.93	0.15	0.64	12.5x20	HLHA2D680M#SS1WPEC
	82	1.25	0.97	2.43	0.15	0.76	10x30	HLHA2D820M#RS3WPEC
	100	1.44	0.80	1.99	0.15	0.90	10x35	HLHA2D101M#RS4WPEC
	120	1.67	0.66	1.66	0.15	1.06	10x40	HLHA2D121M#RS5WPEC
		1.63	0.66	1.66	0.15	1.06	12.5x30	HLHA2D121M#SS3WPEC
		1.56	0.66	1.66	0.15	1.06	16x20	HLHA2D121M#US1WPEC
	150	1.76	0.53	1.33	0.15	1.30	10x45	HLHA2D151M#RS6WPEC
		1.80	0.53	1.33	0.15	1.30	12.5x35	HLHA2D151M#SS4WPEC
	180	2.07	0.44	1.11	0.15	1.54	12.5x35	HLHA2D181M#SS4WPEC
		2.03	0.44	1.11	0.15	1.54	16x25.5	HLHA2D181M#US2WPEC
		2.00	0.44	1.11	0.15	1.54	18x20.5	HLHA2D181M#VS1WPEC

Additional designs on request · Weitere Designs auf Anfrage

Rated Voltage (Surge Voltage) V_r [V DC]	Capacitance C_r [µF]	Ripple Current at 105°C/100Hz I_r [A RMS]	ESR (typ) at 20°C/100Hz [Ω]	ESR max at 20°C/100Hz [Ω]	Dissipation Factor at 20°C/100Hz Tan δ	Leakage current after 1min at 20°C I_{leak} [mA]	DxL [mm]	Product Code # = variable value, see terminal code in the product code
200 VDC Code: 2D Surge Voltage 250 VDC	**220**	2.26	0.36	0.90	0.15	1.86	12.5x45	HLHA2D221M#SS6WPEC
		2.43	0.36	0.90	0.15	1.86	16x31.5	HLHA2D221M#US3WPEC
	270	2.52	0.29	0.74	0.15	2.26	12.5x50	HLHA2D271M#SS7WPEC
		2.36	0.29	0.74	0.15	2.26	16x31.5	HLHA2D271M#US3WPEC
		2.20	0.29	0.74	0.15	2.26	18x25.5	HLHA2D271M#VS2WPEC
	330	2.86	0.24	0.60	0.15	2.74	16x40	HLHA2D331M#US5WPEC
		2.60	0.24	0.60	0.15	2.74	18x31.5	HLHA2D331M#VS3WPEC
	390	3.10	0.20	0.51	0.15	3.22	16x45	HLHA2D391M#US6WPEC
		2.86	0.20	0.51	0.15	3.22	18x36	HLHA2D391M#VS4WPEC
	470	3.36	0.17	0.42	0.15	3.86	16x50	HLHA2D471M#US7WPEC
		3.24	0.17	0.42	0.15	3.86	18x40	HLHA2D471M#VS5WPEC
	560	3.54	0.14	0.36	0.15	4.58	18x45	HLHA2D561M#VS6WPEC
250 VDC Code: 2E Surge Voltage 300 VDC	**33**	0.80	2.41	6.03	0.15	0.43	10x20	HLHA2E330M#RS1WPEC
	47	0.98	1.69	4.23	0.15	0.57	10x25	HLHA2E470M#RS2WPEC
		1.10	1.69	4.23	0.15	0.57	10x30	HLHA2E470M#RS3WPEC
	56	1.35	1.42	3.55	0.15	0.66	12.5x20	HLHA2E560M#SS1WPEC
	68	1.25	1.17	2.93	0.15	0.78	10x35	HLHA2E680M#RS4WPEC
	82	1.43	0.97	2.43	0.15	0.92	10x40	HLHA2E820M#RS5WPEC
		1.43	0.97	2.43	0.15	0.92	12.5x25	HLHA2E820M#SS2WPEC
	100	1.62	0.80	1.99	0.15	1.10	10x45	HLHA2E101M#RS6WPEC
		1.55	0.80	1.99	0.15	1.10	12.5x30	HLHA2E101M#SS3WPEC
		1.43	0.80	1.99	0.15	1.10	16x20	HLHA2E101M#US1WPEC
	120	1.76	0.66	1.66	0.15	1.30	10x50	HLHA2E121M#RS7WPEC
		1.78	0.66	1.66	0.15	1.30	12.5x35	HLHA2E121M#SS4WPEC
		1.64	0.66	1.66	0.15	1.30	18x20.5	HLHA2E121M#VS1WPEC
	150	2.07	0.53	1.33	0.15	1.60	12.5x40	HLHA2E151M#SS5WPEC
		1.96	0.53	1.33	0.15	1.60	16x31.5	HLHA2E151M#US3WPEC
	180	2.18	0.44	1.11	0.15	1.90	12.5x50	HLHA2E181M#SS7WPEC
		2.14	0.44	1.11	0.15	1.90	16x31.5	HLHA2E181M#US3WPEC
		2.07	0.44	1.11	0.15	1.90	18x25.5	HLHA2E181M#VS2WPEC
	220	2.48	0.36	0.90	0.15	2.30	16x36	HLHA2E221M#US4WPEC
		2.48	0.36	0.90	0.15	2.30	18x31.5	HLHA2E221M#VS3WPEC
	270	2.54	0.29	0.74	0.15	2.80	16x40	HLHA2E271M#US5WPEC
		2.52	0.29	0.74	0.15	2.80	18x36	HLHA2E271M#VS4WPEC
	330	2.96	0.24	0.60	0.15	3.40	16x50	HLHA2E331M#US7WPEC
		2.90	0.24	0.60	0.15	3.40	18x40	HLHA2E331M#VS5WPEC
	390	3.18	0.20	0.51	0.15	4.00	18x45	HLHA2E391M#VS6WPEC
	470	3.66	0.17	0.42	0.15	4.80	18x50	HLHA2E471M#VS7WPEC
350 VDC Code: 2V Surge Voltage 400 VDC	**12**	0.34	6.63	22.10	0.20	0.27	10x16	HLHA2V120M#RS0WPEC
	22	0.50	3.62	12.06	0.20	0.31	10x20	HLHA2V220M#RS1WPEC
	27	0.78	2.95	9.82	0.20	0.48	10x25	HLHA2V270M#RS2WPEC
	33	0.83	2.41	8.04	0.20	0.56	10x30	HLHA2V330M#RS3WPEC

Additional designs on request · Weitere Designs auf Anfrage

Rated Voltage (Surge Voltage) V_r [V DC]	Capacitance C_r [µF]	Ripple Current at 105°C/100Hz I_r [A RMS]	ESR (typ) at 20°C/100Hz [Ω]	ESR max at 20°C/100Hz [Ω]	Dissipation Factor at 20°C/100Hz Tan δ	Leakage current after 1min at 20°C I_{leak} [mA]	DxL [mm]	Product Code # = variable value, see terminal code in the product code
350 VDC Code: 2V Surge Voltage 400 VDC	**33**	0.85	2.41	8.04	0.20	0.56	12.5x20	HLHA2V330M#SS1WPEC
	39	0.98	2.04	6.80	0.20	0.65	10x35	HLHA2V390M#RS4WPEC
	47	1.13	1.69	5.64	0.20	0.76	10x40	HLHA2V470M#RS5WPEC
		1.13	1.69	5.64	0.20	0.76	12.5x25	HLHA2V470M#SS2WPEC
	56	1.30	1.42	4.74	0.20	0.88	10x45	HLHA2V560M#RS6WPEC
		1.38	1.42	4.74	0.20	0.88	12.5x30	HLHA2V560M#SS3WPEC
		1.20	1.42	4.74	0.20	0.88	16x20	HLHA2V560M#US1WPEC
	68	1.50	1.17	3.90	0.20	1.05	10x50	HLHA2V680M#RS7WPEC
		1.53	1.17	3.90	0.20	1.05	12.5x35	HLHA2V680M#SS4WPEC
	82	1.78	0.97	3.23	0.20	1.25	12.5x40	HLHA2V820M#SS5WPEC
		1.63	0.97	3.23	0.20	1.25	16x25.5	HLHA2V820M#US2WPEC
	100	1.78	0.80	2.65	0.20	1.50	12.5x45	HLHA2V101M#SS6WPEC
		1.73	0.80	2.65	0.20	1.50	16x31.5	HLHA2V101M#US3WPEC
		1.71	0.80	2.65	0.20	1.50	18x25.5	HLHA2V101M#VS2WPEC
	120	1.91	0.66	2.21	0.20	1.78	12.5x50	HLHA2V121M#SS7WPEC
		2.00	0.66	2.21	0.20	1.78	16x36	HLHA2V121M#US4WPEC
	150	2.25	0.53	1.77	0.20	2.20	16x40	HLHA2V151M#US5WPEC
		2.03	0.53	1.77	0.20	2.20	18x31.5	HLHA2V151M#VS3WPEC
	180	2.52	0.44	1.47	0.20	2.62	16x50	HLHA2V181M#US7WPEC
		2.34	0.44	1.47	0.20	2.62	18x40	HLHA2V181M#VS5WPEC
	220	2.70	0.36	1.21	0.20	3.18	18x45	HLHA2V221M#VS6WPEC
	270	2.80	0.29	0.98	0.20	3.88	18x50	HLHA2V271M#VS7WPEC
400 VDC Code: 2G Surge Voltage 450 VDC	**10**	0.31	7.96	26.53	0.20	0.26	10x16	HLHA2G100M#RS0WPEC
	18	0.55	4.42	14.74	0.20	0.39	10x20	HLHA2G180M#RS1WPEC
	22	0.60	3.62	12.06	0.20	0.45	10x25	HLHA2G220M#RS2WPEC
	27	0.85	2.95	9.82	0.20	0.53	12.5x20	HLHA2G270M#SS1WPEC
	33	0.85	2.41	8.04	0.20	0.63	10x30	HLHA2G330M#RS3WPEC
	39	0.98	2.04	6.80	0.20	0.72	10x35	HLHA2G390M#RS4WPEC
		0.98	2.04	6.80	0.20	0.72	12.5x25	HLHA2G390M#SS2WPEC
	47	1.10	1.69	5.64	0.20	0.85	10x40	HLHA2G470M#RS5WPEC
		1.14	1.69	5.64	0.20	0.85	12.5x30	HLHA2G470M#SS3WPEC
		1.18	1.69	5.64	0.20	0.85	16x20	HLHA2G470M#US1WPEC
	56	1.31	1.42	4.74	0.20	1.00	12.5x35	HLHA2G560M#SS4WPEC
		1.25	1.42	4.74	0.20	1.00	18x20.5	HLHA2G560M#VS1WPEC
	68	1.50	1.17	3.90	0.20	1.19	12.5x40	HLHA2G680M#SS5WPEC
		1.43	1.17	3.90	0.20	1.19	16x25.5	HLHA2G680M#US2WPEC
	82	1.70	0.97	3.23	0.20	1.41	12.5x45	HLHA2G820M#SS6WPEC
		1.68	0.97	3.23	0.20	1.41	16x31.5	HLHA2G820M#US3WPEC
		1.60	0.97	3.23	0.20	1.41	18x25.5	HLHA2G820M#VS2WPEC
	100	1.71	0.80	2.65	0.20	1.70	12.5x50	HLHA2G101M#SS7WPEC
		1.71	0.80	2.65	0.20	1.70	16x36	HLHA2G101M#US4WPEC

Additional designs on request · Weitere Designs auf Anfrage

Rated Voltage (Surge Voltage) V_r [V DC]	Capacitance C_r [µF]	Ripple Current at 105°C/100Hz I_r [A RMS]	ESR (typ) at 20°C/100Hz [Ω]	ESR max at 20°C/100Hz [Ω]	Dissipation Factor at 20°C/100Hz Tan δ	Leakage current after 1min at 20°C I_{leak} [mA]	DxL [mm]	Product Code # = variable value, see terminal code in the product code
400 VDC Code: 2G Surge Voltage 450 VDC	**100**	1.60	0.80	2.65	0.20	1.70	18x31.5	HLHA2G101M#VS3WPEC
	120	1.94	0.66	2.21	0.20	2.02	16x40	HLHA2G121M#US5WPEC
		1.89	0.66	2.21	0.20	2.02	18x31.5	HLHA2G121M#VS3WPEC
		1.96	0.66	2.21	0.20	2.02	18x36	HLHA2G121M#VS4WPEC
	150	2.22	0.53	1.77	0.20	2.50	18x40	HLHA2G151M#VS5WPEC
	180	2.46	0.44	1.47	0.20	2.98	18x45	HLHA2G181M#VS6WPEC
	220	2.75	0.36	1.21	0.20	3.62	18x50	HLHA2G221M#VS7WPEC
420 VDC Code: 2X Surge Voltage 470 VDC	**15**	0.48	5.31	17.68	0.20	0.35	10x20	HLHA2X150M#RS1WPEC
	18	0.58	4.42	14.74	0.20	0.40	10x25	HLHA2X180M#RS2WPEC
	22	0.63	3.62	12.06	0.20	0.47	10x25	HLHA2X220M#RS2WPEC
	27	0.73	2.95	9.82	0.20	0.55	10x30	HLHA2X270M#RS3WPEC
		0.75	2.95	9.82	0.20	0.55	12.5x20	HLHA2X270M#SS1WPEC
		0.85	2.95	9.82	0.20	0.55	12.5x25	HLHA2X270M#SS2WPEC
	33	0.85	2.41	8.04	0.20	0.65	10x35	HLHA2X330M#RS4WPEC
		0.88	2.41	8.04	0.20	0.65	12.5x25	HLHA2X330M#SS2WPEC
		1.00	2.41	8.04	0.20	0.65	12.5x30	HLHA2X330M#SS3WPEC
	39	0.98	2.04	6.80	0.20	0.76	10x40	HLHA2X390M#RS5WPEC
		1.00	2.04	6.80	0.20	0.76	16x20	HLHA2X390M#US1WPEC
	47	1.10	1.69	5.64	0.20	0.89	10x45	HLHA2X470M#RS6WPEC
		1.10	1.69	5.64	0.20	0.89	12.5x30	HLHA2X470M#SS3WPEC
		1.26	1.69	5.64	0.20	0.89	12.5x35	HLHA2X470M#SS4WPEC
		1.10	1.69	5.64	0.20	0.89	16x25.5	HLHA2X470M#US2WPEC
	56	1.28	1.42	4.74	0.20	1.04	12.5x35	HLHA2X560M#SS4WPEC
		1.43	1.42	4.74	0.20	1.04	12.5x40	HLHA2X560M#SS5WPEC
		1.28	1.42	4.74	0.20	1.04	16x25.5	HLHA2X560M#US2WPEC
		1.20	1.42	4.74	0.20	1.04	18x20.5	HLHA2X560M#VS1WPEC
	68	1.50	1.17	3.90	0.20	1.24	12.5x45	HLHA2X680M#SS6WPEC
		1.68	1.17	3.90	0.20	1.24	12.5x50	HLHA2X680M#SS7WPEC
		1.40	1.17	3.90	0.20	1.24	16x31.5	HLHA2X680M#US3WPEC
		1.54	1.17	3.90	0.20	1.24	18x25.5	HLHA2X680M#VS2WPEC
	82	1.73	0.97	3.23	0.20	1.48	12.5x50	HLHA2X820M#SS7WPEC
		1.60	0.97	3.23	0.20	1.48	16x31.5	HLHA2X820M#US3WPEC
		1.73	0.97	3.23	0.20	1.48	16x36	HLHA2X820M#US4WPEC
		1.60	0.97	3.23	0.20	1.48	18x25.5	HLHA2X820M#VS2WPEC
		1.83	0.97	3.23	0.20	1.48	18x31.5	HLHA2X820M#VS3WPEC
	100	1.80	0.80	2.65	0.20	1.78	16x40	HLHA2X101M#US5WPEC
		1.76	0.80	2.65	0.20	1.78	18x31.5	HLHA2X101M#VS3WPEC
		1.88	0.80	2.65	0.20	1.78	18x36	HLHA2X101M#VS4WPEC
	120	2.07	0.66	2.21	0.20	2.12	16x45	HLHA2X121M#US6WPEC
		1.91	0.66	2.21	0.20	2.12	18x36	HLHA2X121M#VS4WPEC

Additional designs on request · Weitere Designs auf Anfrage

Rated Voltage (Surge Voltage) V_r [V DC]	Capacitance C_r [µF]	Ripple Current at 105°C/100Hz I_r [A RMS]	ESR (typ) at 20°C/100Hz [Ω]	ESR max at 20°C/100Hz [Ω]	Dissipation Factor at 20°C/100Hz Tan δ	Leakage current after 1min at 20°C I_{leak} [mA]	DxL [mm]	Product Code # = variable value, see terminal code in the product code
420 VDC Code: 2X Surge Voltage 470 VDC	**120**	2.09	0.66	2.21	0.20	2.12	18x40	HLHA2X121M#VS5WPEC
	150	2.12	0.53	1.77	0.20	2.62	16x50	HLHA2X151M#US7WPEC
		2.39	0.53	1.77	0.20	2.62	18x45	HLHA2X151M#VS6WPEC
	180	2.48	0.44	1.47	0.20	3.12	18x50	HLHA2X181M#VS7WPEC
450 VDC Code: 2W Surge Voltage 500 VDC	**10**	0.33	7.96	26.53	0.20	0.28	10x16	HLHA2W100M#RS0WPEC
	15	0.48	5.31	17.68	0.20	0.37	10x20	HLHA2W150M#RS1WPEC
		0.53	5.31	17.68	0.20	0.37	10x25	HLHA2W150M#RS2WPEC
	18	0.58	4.42	14.74	0.20	0.42	10x25	HLHA2W180M#RS2WPEC
	22	0.68	3.62	12.06	0.20	0.50	10x30	HLHA2W220M#RS3WPEC
		0.70	3.62	12.06	0.20	0.50	12.5x20	HLHA2W220M#SS1WPEC
	27	0.80	2.95	9.82	0.20	0.59	10x35	HLHA2W270M#RS4WPEC
		0.73	2.95	9.82	0.20	0.59	12.5x20	HLHA2W270M#SS1WPEC
		0.85	2.95	9.82	0.20	0.59	12.5x25	HLHA2W270M#SS2WPEC
	33	0.88	2.41	8.04	0.20	0.69	10x35	HLHA2W330M#RS4WPEC
		0.90	2.41	8.04	0.20	0.69	12.5x25	HLHA2W330M#SS2WPEC
		1.00	2.41	8.04	0.20	0.69	12.5x30	HLHA2W330M#SS3WPEC
		0.90	2.41	8.04	0.20	0.69	16x20	HLHA2W330M#US1WPEC
	39	1.00	2.04	6.80	0.20	0.80	10x40	HLHA2W390M#RS5WPEC
		1.08	2.04	6.80	0.20	0.80	12.5x30	HLHA2W390M#SS3WPEC
		1.15	2.04	6.80	0.20	0.80	12.5x35	HLHA2W390M#SS4WPEC
		1.00	2.04	6.80	0.20	0.80	16x20	HLHA2W390M#US1WPEC
	47	1.20	1.69	5.64	0.20	0.95	10x50	HLHA2W470M#RS7WPEC
		1.10	1.69	5.64	0.20	0.95	12.5x30	HLHA2W470M#SS3WPEC
		1.20	1.69	5.64	0.20	0.95	12.5x35	HLHA2W470M#SS4WPEC
		1.20	1.69	5.64	0.20	0.95	12.5x35	HLHA2W470M#SS4WPEC
		1.25	1.69	5.64	0.20	0.95	16x25.5	HLHA2W470M#US2WPEC
		1.15	1.69	5.64	0.20	0.95	18x20.5	HLHA2W470M#VS1WPEC
	56	1.25	1.42	4.74	0.20	1.11	12.5x35	HLHA2W560M#SS4WPEC
		1.35	1.42	4.74	0.20	1.11	12.5x40	HLHA2W560M#SS5WPEC
		1.46	1.42	4.74	0.20	1.11	16x25.5	HLHA2W560M#US2WPEC
		1.25	1.42	4.74	0.20	1.11	18x20.5	HLHA2W560M#VS1WPEC
	68	1.45	1.17	3.90	0.20	1.32	12.5x40	HLHA2W680M#SS5WPEC
		1.53	1.17	3.90	0.20	1.32	16x31.5	HLHA2W680M#US3WPEC
		1.65	1.17	3.90	0.20	1.32	16x36	HLHA2W680M#US4WPEC
		1.53	1.17	3.90	0.20	1.32	18x25.5	HLHA2W680M#VS2WPEC
	82	1.65	0.97	3.23	0.20	1.58	12.5x45	HLHA2W820M#SS6WPEC
		1.75	0.97	3.23	0.20	1.58	12.5x50	HLHA2W820M#SS7WPEC
		1.63	0.97	3.23	0.20	1.58	16x31.5	HLHA2W820M#US3WPEC
		1.60	0.97	3.23	0.20	1.58	18x25.5	HLHA2W820M#VS2WPEC
		1.83	0.97	3.23	0.20	1.58	18x31.5	HLHA2W820M#VS3WPEC
	100	1.64	0.80	2.65	0.20	1.90	16x36	HLHA2W101M#US4WPEC

Additional designs on request · Weitere Designs auf Anfrage

Rated Voltage (Surge Voltage) V_r [V DC]	Capacitance C_r [µF]	Ripple Current at 105°C/100Hz I_r [A RMS]	ESR (typ) at 20°C/100Hz [Ω]	ESR max at 20°C/100Hz [Ω]	Dissipation Factor at 20°C/100Hz Tan δ	Leakage current after 1min at 20°C I_{leak} [mA]	DxL [mm]	Product Code # = variable value, see terminal code in the product code
450 VDC Code: 2W Surge Voltage 500 VDC	**100**	1.88	0.80	2.65	0.20	1.90	16x40	HLHA2W101M#US5WPEC
		1.69	0.80	2.65	0.20	1.90	18x31.5	HLHA2W101M#VS3WPEC
		1.88	0.80	2.65	0.20	1.90	18x36	HLHA2W101M#VS4WPEC
	120	1.94	0.66	2.21	0.20	2.26	18x36	HLHA2W121M#VS4WPEC
		2.09	0.66	2.21	0.20	2.26	18x40	HLHA2W121M#VS5WPEC
	150	2.15	0.53	1.77	0.20	2.80	18x40	HLHA2W151M#VS5WPEC
		2.25	0.53	1.77	0.20	2.80	18x45	HLHA2W151M#VS6WPEC
		2.39	0.53	1.77	0.20	2.80	18x50	HLHA2W151M#VS7WPEC
	180	2.45	0.44	1.47	0.20	3.34	18x50	HLHA2W181M#VS7WPEC

Additional designs on request · Weitere Designs auf Anfrage

› Ripple Current Multiplier · Wechselstrommultiplikator

Frequency [Hz]	50/60	100–120	500	1 k	10 k	100 k
Multiplier for capacitance 10–82 µF	0.32	0.40	0.52	0.60	0.84	1.00
Multiplier for capacitance 100–220 µF	0.36	0.44	0.58	0.67	0.93	1.00
Multiplier for capacitance 270–820 µF	0.40	0.50	0.65	0.75	0.95	1.00

Temperature [°C]	40	45	50	55	60	65	70	75	80	85	90	95	100	105
Multiplier I_r at 100 kHz	2.20	2.20	2.15	2.10	2.05	2.00	2.00	1.95	1.90	1.82	1.75	1.60	1.30	1.00

› Impedance Stability · Impedanz Stabilität

Rated Voltage [V]	160	200	250	350	400	420	450
$Z_{-25°C}$ / $Z_{+20°C}$ at 120 Hz	3		4	6			
$Z_{-40°C}$ / $Z_{+20°C}$ at 120 Hz	6			8			

› Life Time Tests and Requirements · Anforderungen Brauchbarkeitsdauer

Life time test		Test procedure	Life time criteria
Endurance test	Length L < 25.0 mm Length L ≥ 25.0 mm	T_a = 105 °C; V_r, I_r applied 10000 hours T_a = 105 °C; V_r, I_r applied 12000 hours	ΔC/C ≤ 20 % (of initial value) Tanδ ≤ 200 % (of specified value) I_L ≤ specified value
Useful life	Length L < 25.0 mm Length L ≥ 25.0 mm	T_a = 105 °C; V_r, I_r applied 12000 hours T_a = 105 °C; V_r, I_r applied 14000 hours	ΔC/C ≤ 30 % (of initial value) Tanδ < 300 % (of specified value) I_L ≤ specified value

Reference Specification: IEC 60384-4

> Life Time Table and Graph · Brauchbarkeitsdauer – Tabelle und Diagramm

length L < 25.0 mm

HLHA	Ripple Current Multiplier I_r at 100 kHz													
T_a	1.00	1.15	1.30	1.45	1.60	1.75	1.82	1.90	1.95	2.00	2.05	2.10	2.15	2.20
40°C	200	200	200	200	200	200	200	178	156	136	118	101	88	76
45°C	200	200	200	200	200	184	156	126	110	96	83	71	62	54
50°C	200	200	200	200	184	130	110	89	78	68	59	50	44	
55°C	200	200	200	179	130	92	78	63	55	48	42	36		
60°C	200	200	168	126	92	65	55	44	39	34	29			
65°C	192	154	119	89	65	46	39	31	28	24				
70°C	136	109	84	63	46	32	28	22	19	17				
75°C	96	77	60	45	33	23	19	16	14					
80°C	68	54	42	32	23	16	14	11						
85°C	48	38	30	22	16	11	10							
90°C	34	27	21	16	12	8								
95°C	24	19	15	11	8									
100°C	17	14	11											
105°C	12													

khrs Max. value limited to 200 000 hours.

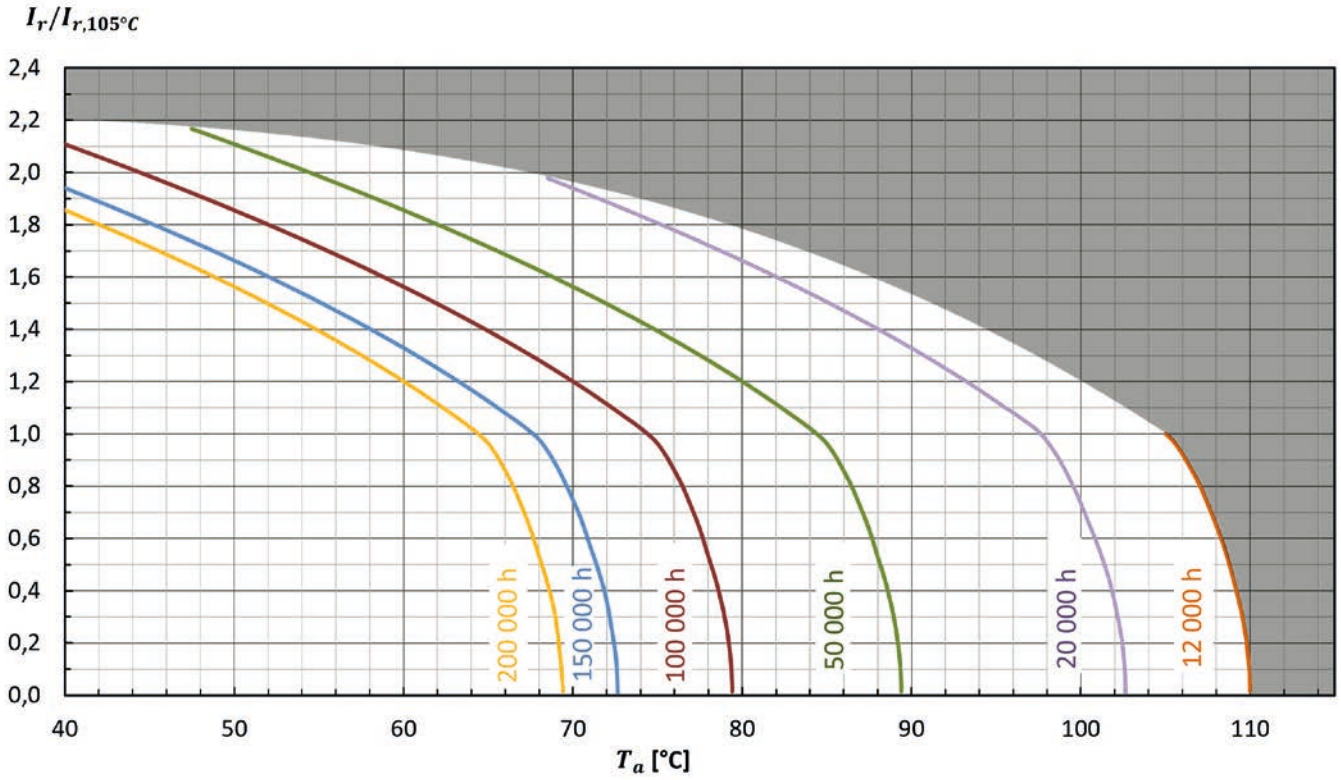

> Life Time Table and Graph · Brauchbarkeitsdauer – Tabelle und Diagramm

length L ≥ 25.0 mm

HLHA	Ripple Current Multiplier I_r at 100 kHz													
T_a	1.00	1.15	1.30	1.45	1.60	1.75	1.82	1.90	1.95	2.00	2.05	2.10	2.15	2.20
40°C	200	200	200	200	200	200	200	200	182	158	138	118	102	88
45°C	200	200	200	200	200	200	182	147	128	112	97	83	72	63
50°C	200	200	200	200	200	152	128	104	91	79	69	59	51	
55°C	200	200	200	200	152	107	91	73	64	56	49	42		
60°C	200	200	196	148	107	76	64	52	45	40	34			
65°C	200	179	139	104	76	54	45	37	32	28				
70°C	158	127	98	74	54	38	32	26	23	20				
75°C	112	90	69	52	38	27	23	18	16					
80°C	79	63	49	37	27	19	16	13						
85°C	56	45	35	26	19	13	11							
90°C	40	32	25	18	13	9								
95°C	28	22	17	13	9									
100°C	20	16	12											
105°C	14													

khrs Max. value limited to 200 000 hours.

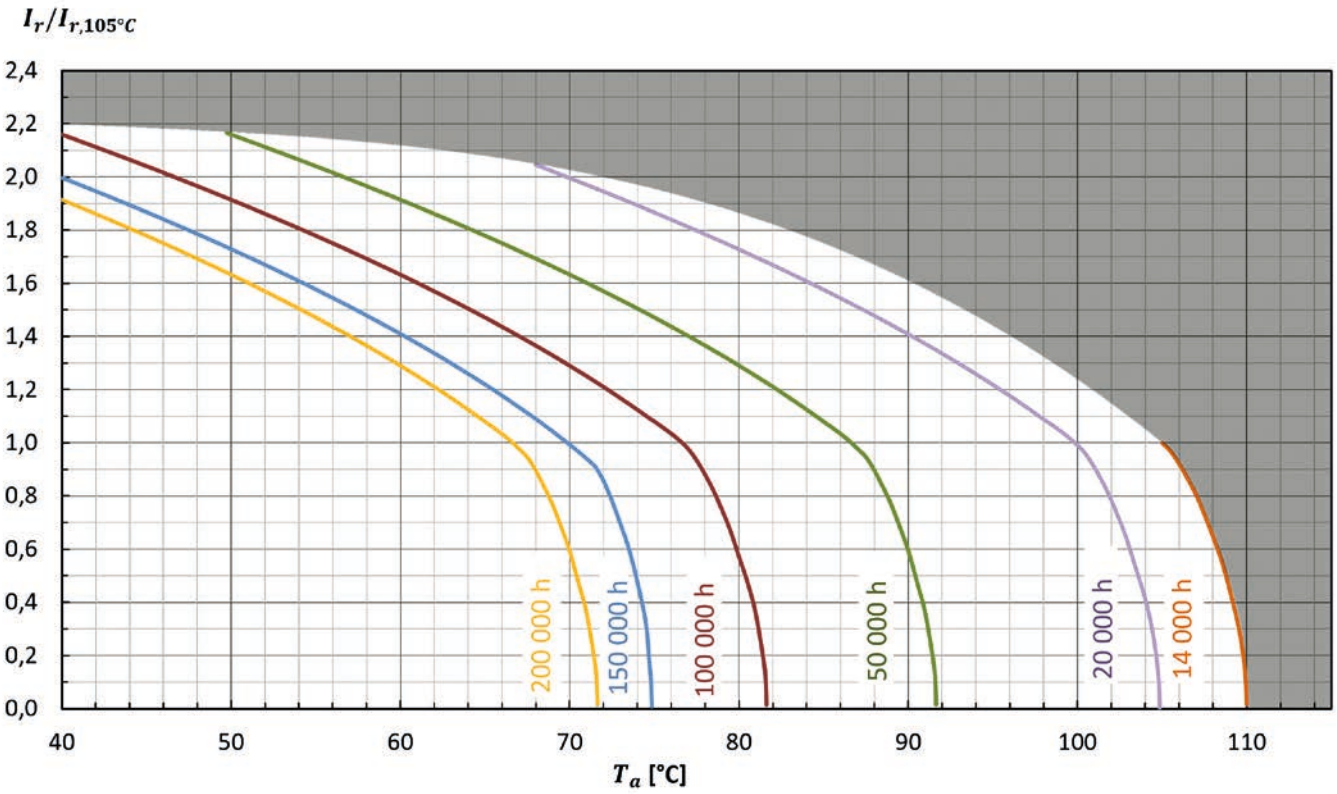

HLHD · Radial · 12000 h/105 °C

High Ripple Current · High Voltage · Long-Life

> Specifications · Spezifikationen

Items	Characteristics
Temperature range	-40 °C ~ + 105 °C
Capacitance tolerance (at 20 °C)	Standard +/- 20 % at 20 °C
Surge voltage	Repetitive max. 30 sec per 6 Minutes, 1000 times
Leakage current max. I_L (20 °C, 1 min)	Refer to the specific item value in product table
Useful life	10 000 hours at 105 °C; I_r, V_r for Diam = 8.0–10.0 mm 12 000 hours at 105 °C; I_r, V_r for Diam ≥ 12.5 mm
Shelf life	1000 hours at 105 °C, $I_r = V_r = 0$
Reference standards	IEC 60384-4
Vibration	0.75 mm, 10...55 Hz, 10 g, 3x2 h
Product Compliance	RoHS, REACH, Conflict Minerals a.o. - refer to p. 14–15

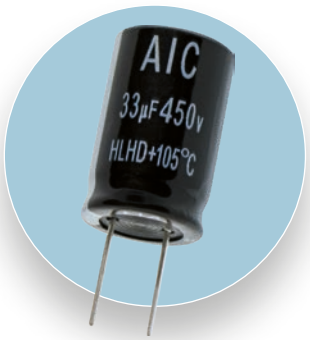

> Outline Drawings · Bauformen

Refer to page 7 for available terminal shapes and dimensions. · Auf Seite 7 finden Sie die verfügbaren Bauformen und Maße.

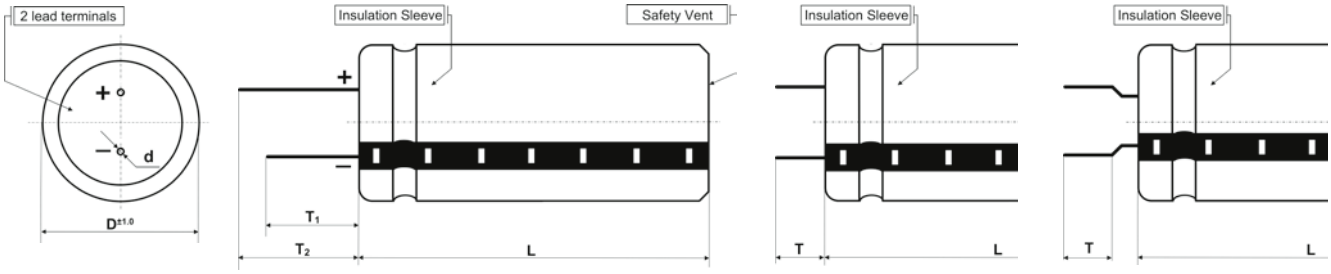

> Product Code · Bestellbezeichnung

Example: Series HLHD · 450 V · 180 µF ±20 % · 18x45 mm · Long Lead · without plate

HLHD **2W** **181** **M** **L** **V S6** **WPEC**

Series name

Capacitance code

The first two digits are significant. The last digit indicates the number of following zeros in µF.

Terminal code

- L: long lead
- C: cut 4.5 mm
- D: cut 4.0 mm
- E: cut 3.5 mm
- F: cut 3.0 mm
- T: Taped

Outer design code

WPEC: PET sleeve without plate (standard)

[with plate available on request]

Rated voltage code

Code	L	Code	L
2C	160V	2G	400V
2K	180V	2P	415V
2D	200V	2X	420V
2E	250V	2W	450V
2V	350V	2H	500V
2J	385V		

Capacitance tolerance

M :	± 20 %
K :	± 10 %
Q :	-10 % +30 %
R :	-0 % +20 %
L :	± 15 %
V :	-10 % +20 %

Dimension

Diameter (mm)		Length (mm)	
Q	8	S0	< 16
R	10	S1	20–24
S	12.5	S2	25–29
U	16	S3	30–34
V	18	S4	35–39
W	20	S5	40–44
X	22	S6	45
		S7	50

AIC EUROPE GmbH · Sales & technical support of AIC capacitors · Telefon: +49 (0)2151-4943-5 · E-Mail: info@aic-europe.com · www.aic-europe.com

Rated Voltage (Surge Voltage) V_r [V DC]	Capacitance C_r [µF]	Ripple Current at 105°C/100Hz I_r [A RMS]	ESR (typ) at 20°C/100Hz [Ω]	ESR max at 20°C/100Hz [Ω]	Dissipation Factor at 20°C/100Hz Tan δ	Leakage current after 1min at 20°C I_{leak} [mA]	DxL [mm]	Product Code # = variable value, see terminal code in the product code
160 VDC Code: 2C Surge Voltage 200 VDC	**10**	0.32	8.00	19.90	0.15	0.16	10x16	HLHD2C100M#RS0WPEC
	22	0.50	3.60	9.00	0.15	0.24	10x20	HLHD2C220M#RS1WPEC
	33	0.65	2.40	6.00	0.15	0.31	10x20	HLHD2C330M#RS1WPEC
	47	0.75	1.70	4.20	0.15	0.40	10x20	HLHD2C470M#RS1WPEC
	68	1.18	1.20	2.90	0.15	0.54	12.5x20	HLHD2C680M#SS1WPEC
		1.18	1.20	2.90	0.15	0.54	16x20	HLHD2C680M#US1WPEC
	100	1.42	0.80	2.00	0.15	0.74	12.5x25	HLHD2C101M#SS2WPEC
		1.42	0.80	2.00	0.15	0.74	16x20	HLHD2C101M#US1WPEC
	150	1.89	0.50	1.30	0.15	1.06	16x25.5	HLHD2C151M#US2WPEC
	220	2.37	0.40	0.90	0.15	1.51	18x25.5	HLHD2C221M#VS2WPEC
	330	3.22	0.20	0.60	0.15	2.21	18x31.5	HLHD2C331M#VS3WPEC
200 VDC Code: 2D Surge Voltage 250 VDC	**4.7**	0.16	16.90	42.30	0.15	0.14	8x11.5	HLHD2D4R7M#QS0WPEC
	6.8	0.20	11.70	29.30	0.15	0.16	10x12.5	HLHD2D6R8M#RS0WPEC
	10	0.22	8.00	19.90	0.15	0.18	8x11.5	HLHD2D100M#QS0WPEC
		0.28	8.00	19.90	0.15	0.18	10x12.5	HLHD2D100M#RS0WPEC
	22	0.40	3.60	9.00	0.15	0.28	10x12.5	HLHD2D220M#RS0WPEC
		0.50	3.60	9.00	0.15	0.28	10x20	HLHD2D220M#RS1WPEC
	33	0.65	2.40	6.00	0.15	0.36	10x20	HLHD2D330M#RS1WPEC
	47	0.98	1.70	4.20	0.15	0.48	12.5x20	HLHD2D470M#SS1WPEC
	68	1.30	1.20	2.90	0.15	0.64	12.5x25	HLHD2D680M#SS2WPEC
		1.30	1.20	2.90	0.15	0.64	16x20	HLHD2D680M#US1WPEC
	100	1.42	0.80	2.00	0.15	0.90	16x20	HLHD2D101M#US1WPEC
	150	1.89	0.50	1.30	0.15	1.30	16x25.5	HLHD2D151M#US2WPEC
	220	2.33	0.40	0.90	0.15	1.86	18x25.5	HLHD2D221M#VS2WPEC
	330	3.22	0.20	0.60	0.15	1.79	18x35.5	HLHD2D331M#VS4WPEC
250 VDC Code: 2E Surge Voltage 300 VDC	**4.7**	0.16	16.90	42.30	0.15	0.15	8x11.5	HLHD2E4R7M#QS0WPEC
	6.8	0.25	11.70	29.30	0.15	0.17	10x12.5	HLHD2E6R8M#RS0WPEC
	10	0.32	8.00	19.90	0.15	0.20	10x16	HLHD2E100M#RS0WPEC
	22	0.47	3.60	9.00	0.15	0.32	10x16	HLHD2E220M#RS0WPEC
		0.50	3.60	9.00	0.15	0.32	10x20	HLHD2E220M#RS1WPEC
	33	0.76	2.40	6.00	0.15	0.43	12.5x16	HLHD2E330M#SS0WPEC
		0.80	2.40	6.00	0.15	0.43	12.5x20	HLHD2E330M#SS1WPEC
	47	0.98	1.70	4.20	0.15	0.57	12.5x20	HLHD2E470M#SS1WPEC
	68	1.30	1.20	2.90	0.15	0.78	12.5x25	HLHD2E680M#SS2WPEC
		1.30	1.20	2.90	0.15	0.78	16x20	HLHD2E680M#US1WPEC
	100	1.53	0.80	2.00	0.15	1.10	16x25	HLHD2E101M#US2WPEC
		1.44	0.80	2.00	0.15	1.10	18x20.5	HLHD2E101M#VS1WPEC
	150	1.96	0.50	1.30	0.15	1.60	18x25.5	HLHD2E151M#VS2WPEC
	220	2.55	0.40	0.90	0.15	2.30	18x31.5	HLHD2E221M#VS3WPEC
350 VDC Code: 2V Surge Voltage 400 VDC	**3.3**	0.13	24.10	80.40	0.20	0.15	8x11.5	HLHD2V3R3M#QS0WPEC
	4.7	0.15	16.90	56.50	0.20	0.17	10x12.5	HLHD2V4R7M#RS0WPEC
	5.6	0.15	14.20	47.40	0.20	0.18	8x11.5	HLHD2V5R6M#QS0WPEC
		0.18	14.20	47.40	0.20	0.18	10x12.5	HLHD2V5R6M#RS0WPEC
	6.8	0.28	11.70	39.00	0.20	0.20	10x16	HLHD2V6R8M#RS0WPEC

Additional designs on request · Weitere Designs auf Anfrage

Rated Voltage (Surge Voltage) V_r [V DC]	Capacitance C_r [µF]	Ripple Current at 105°C/100Hz I_r [A RMS]	ESR (typ) at 20°C/100Hz [Ω]	ESR max at 20°C/100Hz [Ω]	Dissipation Factor at 20°C/100Hz Tan δ	Leakage current after 1min at 20°C I_{leak} [mA]	DxL [mm]	Product Code # = variable value, see terminal code in the product code
350 VDC Code: 2V Surge Voltage 400 VDC	**10**	0.28	8.00	26.50	0.20	0.24	10x12.5	HLHD2V100M#RS0WPEC
		0.35	8.00	26.50	0.20	0.24	10x20	HLHD2V100M#RS1WPEC
	22	0.65	3.60	12.10	0.20	0.41	12.5x20	HLHD2V220M#SS1WPEC
	33	0.85	2.40	8.00	0.15	0.56	12.5x25	HLHD2V330M#SS2WPEC
		0.90	2.40	8.00	0.20	0.56	16x20	HLHD2V330M#US1WPEC
	47	1.08	1.70	5.60	0.20	0.76	16x20	HLHD2V470M#US1WPEC
	68	1.35	1.20	3.90	0.15	1.05	18x20.5	HLHD2V680M#VS1WPEC
		1.47	1.20	3.90	0.20	1.05	18x25.5	HLHD2V680M#VS2WPEC
	82	1.53	0.97	3.20	0.20	1.25	18x25.5	HLHD2V820M#VS2WPEC
400 VDC Code: 2G Surge Voltage 450 VDC	**1.5**	0.08	53.10	177.00	0.20	0.12	8x11.5	HLHD2G1R5M#QS0WPEC
	2.2	0.10	36.20	121.00	0.20	0.14	8x11.5	HLHD2G2R2M#QS0WPEC
		0.14	36.20	121.00	0.20	0.14	10x12.5	HLHD2G2R2M#RS0WPEC
	3.3	0.15	24.10	80.40	0.20	0.15	10x12.5	HLHD2G3R3M#RS0WPEC
		0.18	24.10	80.40	0.20	0.15	10x16	HLHD2G3R3M#RS0WPEC
	4.7	0.16	16.90	56.50	0.20	0.18	8x11.5	HLHD2G4R7M#QS0WPEC
		0.22	16.90	56.50	0.20	0.18	10x16	HLHD2G4R7M#RS0WPEC
	5.6	0.20	14.20	47.40	0.20	0.19	10x12.5	HLHD2G5R6M#RS0WPEC
	6.8	0.22	11.70	39.00	0.20	0.21	10x16	HLHD2G6R8M#RS0WPEC
		0.28	11.70	39.00	0.20	0.21	10x20	HLHD2G6R8M#RS1WPEC
	10	0.35	8.00	26.50	0.20	0.26	10x20	HLHD2G100M#RS1WPEC
	15	0.50	5.30	17.70	0.15	0.34	12.5x16	HLHD2G150M#SS0WPEC
		0.55	5.30	17.70	0.20	0.34	12.5x20	HLHD2G150M#SS1WPEC
	22	0.65	3.60	12.10	0.20	0.45	12.5x20	HLHD2G220M#SS1WPEC
		0.76	3.60	12.10	0.20	0.45	12.5x25	HLHD2G220M#SS2WPEC
		0.76	3.60	12.10	0.20	0.45	16x20	HLHD2G220M#US1WPEC
	33	0.90	2.40	8.00	0.20	0.63	16x20	HLHD2G330M#US1WPEC
	47	1.18	1.70	5.60	0.20	0.85	16x25.5	HLHD2G470M#US2WPEC
		1.18	1.70	5.60	0.20	0.85	18x20.5	HLHD2G470M#VS1WPEC
	68	1.47	1.20	3.90	0.20	1.19	18x25	HLHD2G680M#VS2WPEC
	82	1.60	1.00	3.20	0.20	1.41	18x31.5	HLHD2G820M#VS3WPEC
	100	1.78	0.80	2.70	0.20	1.70	18x36	HLHD2G101M#VS4WPEC
450 VDC Code: 2W Surge Voltage 500 VDC	**2.2**	0.09	36.20	121.00	0.20	0.14	8x11.5	HLHD2W2R2M#QS0WPEC
		0.09	36.20	121.00	0.20	0.14	10x12.5	HLHD2W2R2M#RS0WPEC
	3.3	0.18	24.10	80.40	0.20	0.16	10x12.5	HLHD2W3R3M#RS0WPEC
		0.19	24.10	80.40	0.20	0.16	10x16	HLHD2W3R3M#RS0WPEC
	4.7	0.21	16.90	56.50	0.20	0.18	10x16	HLHD2W4R7M#RS0WPEC
	5.6	0.20	14.20	47.40	0.20	0.20	10x16	HLHD2W5R6M#RS0WPEC
	6.8	0.23	11.70	39.00	0.20	0.22	10x16	HLHD2W6R8M#RS0WPEC
		0.28	11.70	39.00	0.20	0.22	10x20	HLHD2W6R8M#RS1WPEC
	10	0.30	8.00	26.50	0.20	0.28	10x20	HLHD2W100M#RS1WPEC
	15	0.45	5.30	17.70	0.20	0.37	12.5x20	HLHD2W150M#SS1WPEC
	22	0.60	3.60	12.10	0.20	0.50	12.5x25	HLHD2W220M#SS2WPEC
		0.73	3.60	12.10	0.20	0.50	16x20	HLHD2W220M#US1WPEC
	33	0.98	2.40	8.00	0.20	0.69	16x25	HLHD2W330M#US2WPEC

Additional designs on request · Weitere Designs auf Anfrage

Rated Voltage (Surge Voltage) V_r [V DC]	Capacitance C_r [µF]	Ripple Current at 105°C/100Hz I_r [A RMS]	ESR (typ) at 20°C/100Hz [Ω]	ESR max at 20°C/100Hz [Ω]	Dissipation Factor at 20°C/100Hz Tan δ	Leakage current after 1min at 20°C I_{leak} [mA]	DxL [mm]	Product Code # = variable value, see terminal code in the product code
450 VDC Code: 2W Surge Voltage 500 VDC	**47**	1.09	1.70	5.60	0.20	0.95	16x25	HLHD2W470M#US2WPEC
		1.20	1.70	5.60	0.20	0.95	18x25.5	HLHD2W470M#VS2WPEC
	68	1.44	1.20	3.90	0.20	1.32	18x25.5	HLHD2W680M#VS2WPEC
		1.58	1.20	3.90	0.20	1.32	18x31.5	HLHD2W680M#VS3WPEC
	82	1.60	1.00	3.20	0.20	1.58	18x31.5	HLHD2W820M#VS3WPEC
		1.68	1.00	3.20	0.20	1.58	18x36	HLHD2W820M#VS4WPEC
	100	1.70	0.80	2.70	0.20	1.90	18x31.5	HLHD2W101M#VS3WPEC
		1.73	0.80	2.70	0.20	1.90	18x36	HLHD2W101M#VS4WPEC
	120	1.75	0.70	2.20	0.20	2.26	18x36	HLHD2W121M#VS4WPEC
		1.82	0.70	2.20	0.20	2.26	18x40	HLHD2W121M#VS5WPEC
	150	2.02	0.50	1.80	0.20	2.80	18x40	HLHD2W151M#VS5WPEC
		2.14	0.50	1.80	0.20	2.80	18x45	HLHD2W151M#VS6WPEC
	180	2.38	0.40	1.50	0.20	3.34	18x45	HLHD2W181M#VS6WPEC
		2.46	0.40	1.50	0.20	3.34	18x50	HLHD2W181M#VS7WPEC
	220	2.60	0.36	1.20	0.20	4.06	18x50	HLHD2W221M#VS7WPEC
500 VDC Code: 2H Surge Voltage 550 VDC	**10**	0.36	9.30	26.50	0.20	0.30	12.5x20	HLHD2H100M#SS1WPEC
	15	0.48	6.20	17.70	0.20	0.40	12.5x25	HLHD2H150M#SS2WPEC
	22	0.58	4.20	12.10	0.20	0.54	16x25.5	HLHD2H220M#US2WPEC
	33	0.72	2.80	8.00	0.20	0.76	16x31.5	HLHD2H330M#US3WPEC
	47	0.90	2.00	5.60	0.20	1.04	18x31.5	HLHD2H470M#VS3WPEC
	56	0.98	1.60	4.80	0.20	1.22	18x31.5	HLHD2H560M#VS3WPEC
	68	1.25	1.40	3.90	0.20	1.46	18x36	HLHD2H680M#VS4WPEC
	82	1.33	1.10	3.20	0.20	1.74	18x40	HLHD2H820M#VS5WPEC
	100	1.43	0.90	2.70	0.20	2.10	18x45	HLHD2H101M#VS6WPEC
		1.45	0.90	2.70	0.20	2.10	20x41	HLHD2H101M#WS5WPEC
	120	1.64	0.80	2.30	0.20	2.50	18x50	HLHD2H121M#VS7WPEC
	150	1.95	0.50	1.80	0.20	3.10	22x45	HLHD2H151M#XS6WPEC

Additional designs on request · Weitere Designs auf Anfrage

> Ripple Current Multiplier · Wechselstrommultiplikator

Frequency [Hz]	50/60	100–120	500	1 k	10 k	100 k
Multiplier for capacitance 1–5.6 µF	0.07	0.20	0.38	0.55	0.78	1.00
Multiplier for capacitance 6.8–15 µF	0.10	0.30	0.50	0.65	0.85	1.00
Multiplier for capacitance 22–82 µF	0.20	0.40	0.58	0.73	0.90	1.00
Multiplier for capacitance 100–330 µF	0.27	0.45	0.61	0.75	0.90	1.00

Temperature [°C]		40	45	50	55	60	65	70	75	80	85	90	95	100	105
Multiplier I_r at 100 kHz	diameter D 8.0–10.0 mm	2.20	2.15	2.10	2.05	2.00	1.95	1.90	1.82	1.75	1.60	1.45	1.30	1.15	1.00
	diameter D ≥ 12.5 mm	2.20	2.20	2.15	2.10	2.05	2.00	2.00	1.95	1.90	1.82	1.75	1.60	1.30	1.00

> Impedance Stability · Impedanz Stabilität

Rated Voltage [V]	160	200	250	350	400	450	500
$Z_{-25°C}$ / $Z_{+20°C}$ at 120 Hz	3			6			
$Z_{-40°C}$ / $Z_{+20°C}$ at 120 Hz	6			8			10

> Life Time Tests and Requirements · Anforderungen Brauchbarkeitsdauer

Life time test		Test procedure	Life time criteria
Endurance test	D = 8.0–10.0 mm D ≥ 12.5 mm	T_a = 105 °C; V_r, I_r applied 8000 hours T_a = 105 °C; V_r, I_r applied 10000 hours	ΔC/C ≤ 20 % (of initial value) Tanδ ≤ 200 % (of specified value) I_L ≤ specified value
Useful life	D = 8.0–10.0 mm D ≥ 12.5 mm	T_a = 105 °C; V_r, I_r applied 10000 hours T_a = 105 °C; V_r, I_r applied 12000 hours	ΔC/C ≤ 30 % (of initial value) Tanδ < 300 % (of specified value) I_L ≤ specified value

Reference Specification: IEC 60384-4

> Life Time Table and Graph · Brauchbarkeitsdauer – Tabelle und Diagramm

diameter D within 8.0–10.0 mm

HLHD	Ripple Current Multiplier I_r at 100 kHz													
T_a	1.00	1.15	1.30	1.45	1.60	1.75	1.82	1.90	1.95	2.00	2.05	2.10	2.15	2.20
40°C	200	200	200	200	200	200	183	148	130	113	98	84	73	63
45°C	200	200	200	200	200	153	130	105	92	80	70	59	52	
50°C	200	200	200	200	153	108	92	74	65	57	49	42		
55°C	200	200	198	149	109	77	65	52	46	40	35			
60°C	200	181	140	105	77	54	46	37	32	28				
65°C	160	128	99	75	54	38	32	26	23					
70°C	113	90	70	53	38	27	23	19						
75°C	80	64	50	37	27	19	16							
80°C	57	45	35	26	19	14								
85°C	40	32	25	19	14									
90°C	28	23	18	13										
95°C	20	16	12											
100°C	14	11												
105°C	10													

khrs Max. value limited to 200 000 hours.

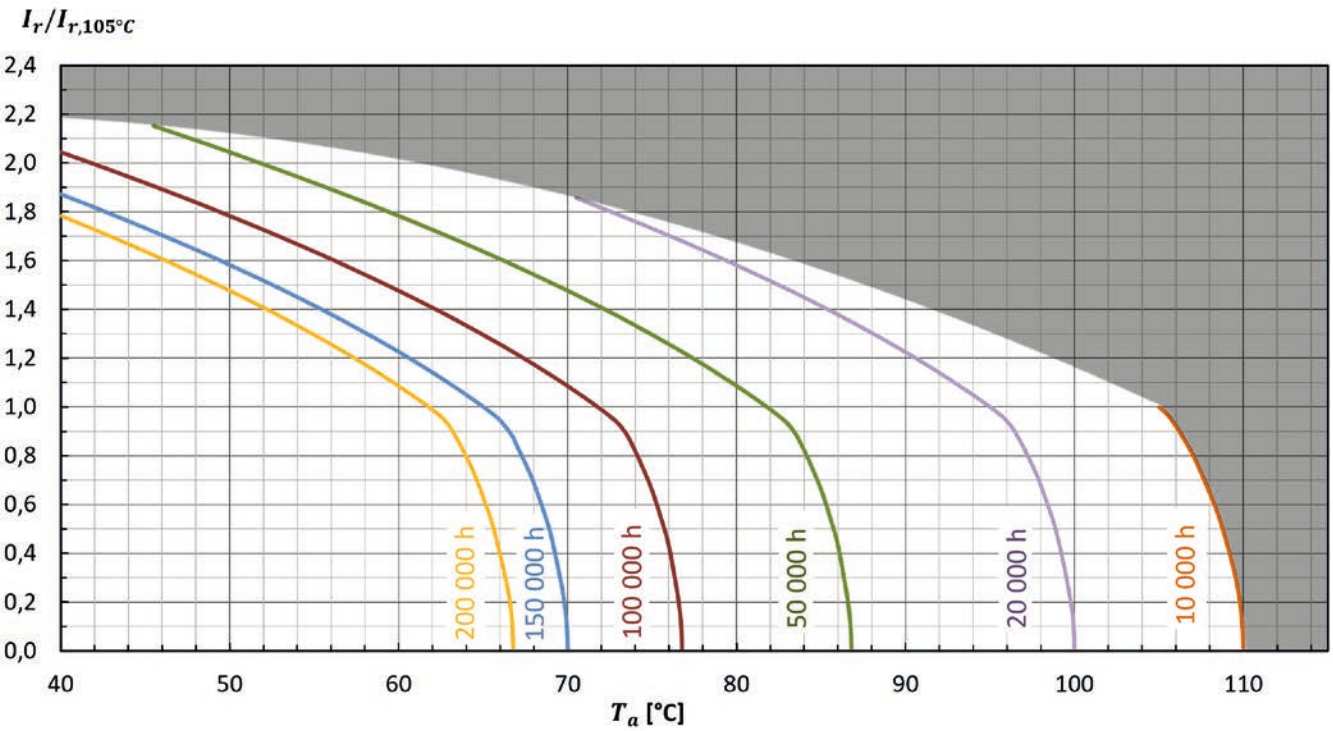

> Life Time Table and Graph · Brauchbarkeitsdauer – Tabelle und Diagramm

diameter D ≥ 12.5 mm

HLHD	Ripple Current Multiplier I_r at 100 kHz													
T_a	1.00	1.15	1.30	1.45	1.60	1.75	1.82	1.90	1.95	2.00	2.05	2.10	2.15	2.20
40°C	200	200	200	200	200	200	200	178	156	136	118	101	88	76
45°C	200	200	200	200	200	184	156	126	110	96	83	71	62	54
50°C	200	200	200	200	184	130	110	89	78	68	59	50	44	
55°C	200	200	200	179	130	92	78	63	55	48	42	36		
60°C	200	200	168	126	92	65	55	44	39	34	29			
65°C	192	154	119	89	65	46	39	31	28	24				
70°C	136	109	84	63	46	32	28	22	19	17				
75°C	96	77	60	45	33	23	19	16	14					
80°C	68	54	42	32	23	16	14	11						
85°C	48	38	30	22	16	11	10							
90°C	34	27	21	16	12	8								
95°C	24	19	15	11	8									
100°C	17	14	11											
105°C	12													

khrs Max. value limited to 200 000 hours.

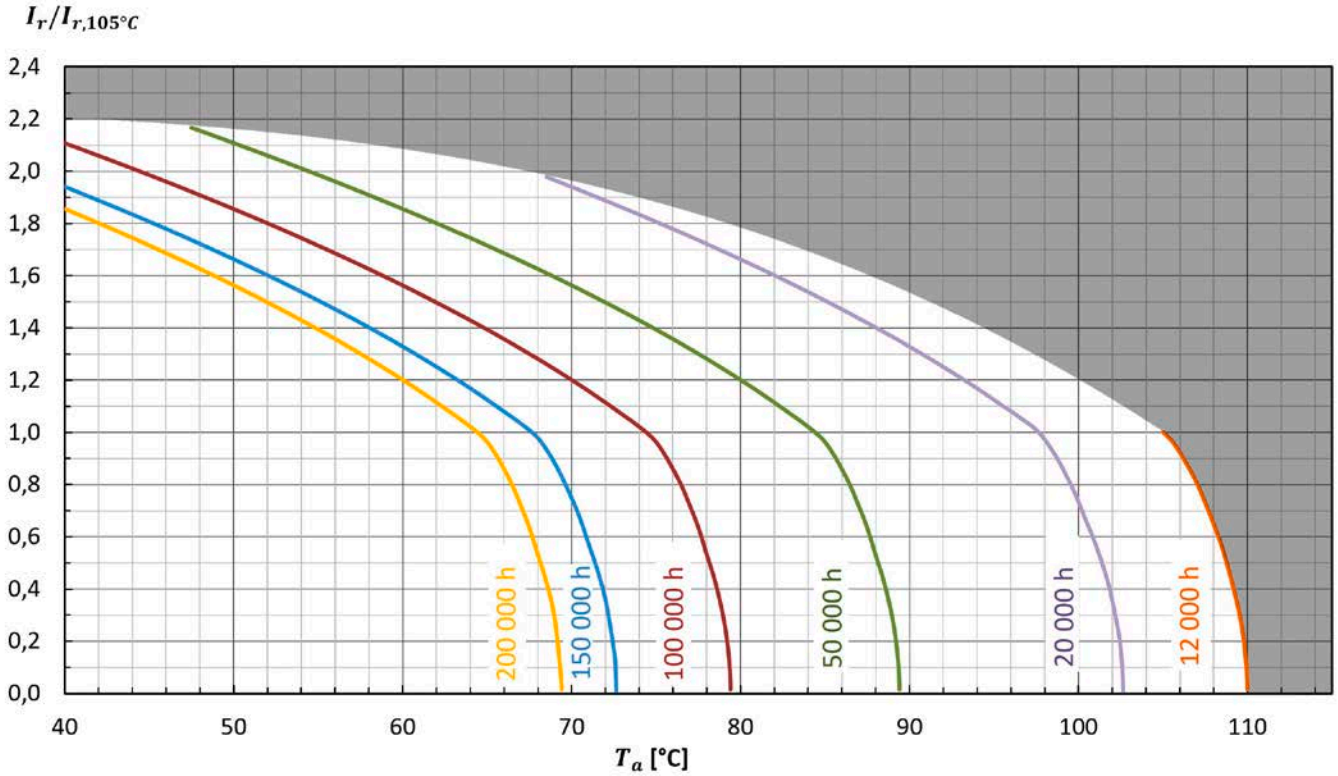

HLHT · Radial · 6000 h/125 °C

High Temperature Design · High Voltage

> Specifications · Spezifikationen

Items	Characteristics
Temperature range	-40 °C ~ + 125 °C for rated voltage 160 – 250 V -25 °C ~ + 125 °C for rated voltage 350 – 450 V
Capacitance tolerance (at 20 °C)	Standard +/- 20 % at 20 °C
Surge voltage	Repetitive max. 30 sec per 6 Minutes, 1000 times
Leakage current max. I_L (20 °C, 1 min)	Refer to the specific item value in product table
Useful life	6000 hours at 125 °C; I_r, V_r
Shelf life	500 hours at 125 °C; $I_r = V_r = 0$
Reference standards	IEC 60384-4
Vibration	0.75 mm, 10...55 Hz, 10 g, 3x2 h
Product Compliance	RoHS, REACH, Conflict Minerals a.o. - refer to p. 14 – 15

> Outline Drawings · Bauformen

Refer to page 7 for available terminal shapes and dimensions. · Auf Seite 7 finden Sie die verfügbaren Bauformen und Maße.

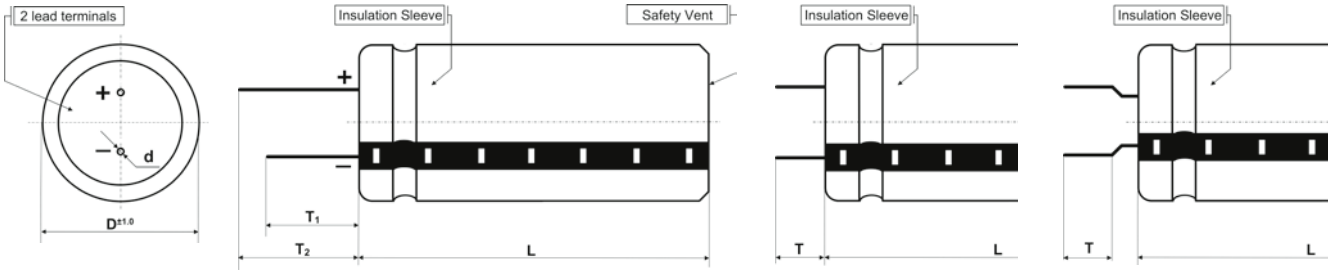

> Product Code · Bestellbezeichnung

Example: Series HLHT · 350 V · 100 µF ± 10 % · 18 x 31.5 mm · 4 mm lead · without plate

HLHT **2V** **101** **K** **D** **V S3** **WPEC**

Series name

Capacitance code

The first two digits are significant. The last digit indicates the number of following zeros in µF.

Terminal code

- L: long lead
- C: cut 4.5 mm
- D: cut 4.0 mm
- E: cut 3.5 mm
- F: cut 3.0 mm
- T: Taped

Outer design code

WPEC: PET sleeve without plate (standard)

[with plate available on request]

Rated voltage code

Code	L	Code	L
2C	160V	2G	400V
2K	180V	2P	415V
2D	200V	2X	420V
2E	250V	2W	450V
2V	350V	2H	500V
2J	385V		

Capacitance tolerance

M :	± 20 %
K :	± 10 %
Q :	-10 % +30 %
R :	-0 % +20 %
L :	± 15 %
V :	-10 % +20 %

Dimension

Diameter (mm)		Length (mm)	
R	10	S0	≤ 16
S	12.5	S1	20
U	16	S2	25
V	18	S3	31.5
		S4	36

Rated Voltage (Surge Voltage) V_r [V DC]	Capacitance C_r [µF]	Ripple Current at 125°C/100Hz I_r [A RMS]	ESR (typ) at 20°C/100Hz [Ω]	ESR max at 20°C/100Hz [Ω]	Dissipation Factor at 20°C/100Hz Tan δ	Leakage current after 1min at 20°C I_{leak} [mA]	DxL [mm]	Product Code # = variable value, see terminal code in the product code
160 VDC Code: 2C Surge Voltage 200 VDC	**10**	0.06	8.00	15.90	0.20	0.12	10x16	HLHT2C100M#RS0WPEC
	22	0.10	3.60	7.20	0.20	0.18	10x20	HLHT2C220M#RS1WPEC
	33	0.14	2.40	4.80	0.20	0.23	12.5x20	HLHT2C330M#SS1WPEC
	47	0.17	1.70	3.40	0.20	0.30	12.5x20	HLHT2C470M#SS1WPEC
	100	0.30	0.80	1.60	0.20	0.55	16x25	HLHT2C101M#US2WPEC
	220	0.51	0.40	0.70	0.20	1.13	18x31.5	HLHT2C221M#VS3WPEC
	330	0.67	0.20	0.50	0.20	1.65	18x36	HLHT2C331M#VS4WPEC
200 VDC Code: 2D Surge Voltage 250 VDC	**10**	0.06	8.00	15.90	0.20	0.13	10x16	HLHT2D100M#RS0WPEC
	22	0.10	3.60	7.20	0.20	0.20	10x20	HLHT2D220M#RS1WPEC
	33	0.14	2.40	4.80	0.20	0.27	12.5x20	HLHT2D330M#SS1WPEC
	47	0.17	1.70	3.40	0.20	0.35	12.5x20	HLHT2D470M#SS1WPEC
	100	0.30	0.80	1.60	0.20	0.67	16x25	HLHT2D101M#US2WPEC
	220	0.51	0.40	0.70	0.20	1.39	18x31.5	HLHT2D221M#VS3WPEC
	330	0.67	0.20	0.50	0.20	2.05	18x36	HLHT2D331M#VS4WPEC
250 VDC Code: 2E Surge Voltage 300 VDC	**4.7**	0.04	16.90	33.90	0.20	0.11	10x16	HLHT2E4R7M#RS0WPEC
	6.8	0.05	11.70	23.40	0.20	0.12	10x16	HLHT2E6R8M#RS0WPEC
	10	0.07	8.00	15.90	0.20	0.15	10x20	HLHT2E100M#RS1WPEC
	22	0.11	3.60	7.20	0.20	0.24	12.5x20	HLHT2E220M#SS1WPEC
	33	0.15	2.40	4.80	0.20	0.32	12.5x25	HLHT2E330M#SS2WPEC
	47	0.21	1.70	3.40	0.20	0.42	16x25	HLHT2E470M#US2WPEC
	100	0.35	0.80	1.60	0.20	0.82	18x31.5	HLHT2E101M#VS3WPEC
	220	0.55	0.40	0.70	0.20	1.72	18x36	HLHT2E221M#VS4WPEC
350 VDC Code: 2V Surge Voltage 400 VDC	**2.2**	0.03	36.20	90.50	0.15	0.09	10x16	HLHT2V2R2M#RS0WPEC
	3.3	0.03	24.10	60.30	0.15	0.10	10x16	HLHT2V3R3M#RS0WPEC
	4.7	0.04	16.90	42.30	0.15	0.12	10x20	HLHT2V4R7M#RS1WPEC
	5.6	0.05	14.20	35.50	0.15	0.13	10x20	HLHT2V5R6M#RS1WPEC
	6.8	0.06	11.70	29.30	0.15	0.14	12.5x20	HLHT2V6R8M#SS1WPEC
	10	0.07	8.00	19.90	0.15	0.18	12.5x20	HLHT2V100M#SS1WPEC
	22	0.11	3.60	9.00	0.15	0.30	12.5x25	HLHT2V220M#SS2WPEC
	33	0.16	2.40	6.00	0.15	0.42	16x25	HLHT2V330M#US2WPEC
	47	0.20	1.70	4.20	0.15	0.56	16x31.5	HLHT2V470M#US3WPEC
400 VDC Code: 2G Surge Voltage 450 VDC	**2.2**	0.03	36.20	90.50	0.15	0.10	10x16	HLHT2G2R2M#RS0WPEC
	3.3	0.03	24.10	60.30	0.15	0.11	10x16	HLHT2G3R3M#RS0WPEC
	4.7	0.04	16.90	42.30	0.15	0.13	10x20	HLHT2G4R7M#RS1WPEC
	5.6	0.05	14.20	35.50	0.15	0.14	10x20	HLHT2G5R6M#RS1WPEC
	6.8	0.06	11.70	29.30	0.15	0.15	12.5x20	HLHT2G6R8M#SS1WPEC
	10	0.07	8.00	19.90	0.15	0.19	12.5x20	HLHT2G100M#SS1WPEC
	22	0.11	3.60	9.00	0.15	0.33	12.5x25	HLHT2G220M#SS2WPEC
	33	0.16	2.40	6.00	0.15	0.47	16x25	HLHT2G330M#US2WPEC
	47	0.20	1.70	4.20	0.15	0.63	16x31.5	HLHT2G470M#US3WPEC
450 VDC Code: 2W Surge Voltage 500 VDC	**2.2**	0.03	36.20	90.50	0.15	0.10	10x16	HLHT2W2R2M#RS0WPEC
	3.3	0.03	24.10	60.30	0.15	0.11	10x16	HLHT2W3R3M#RS0WPEC
	4.7	0.04	16.90	42.30	0.15	0.13	10x20	HLHT2W4R7M#RS1WPEC
	5.6	0.05	14.20	35.50	0.15	0.15	12.5x20	HLHT2W5R6M#SS1WPEC

Additional designs on request · Weitere Designs auf Anfrage

Rated Voltage (Surge Voltage) V_r [V DC]	Capacitance C_r [µF]	Ripple Current at 125°C/100Hz I_r [A RMS]	ESR (typ) at 20°C/100Hz [Ω]	ESR max at 20°C/100Hz [Ω]	Dissipation Factor at 20°C/100Hz Tan δ	Leakage current after 1min at 20°C I_{leak} [mA]	DxL [mm]	Product Code # = variable value, see terminal code in the product code
450 VDC Code: 2W Surge Voltage 500 VDC	**6.8**	0.06	11.70	29.30	0.15	0.16	12.5x20	HLHT2W6R8M#SS1WPEC
	10	0.08	8.00	19.90	0.15	0.21	12.5x25	HLHT2W100M#SS2WPEC
	22	0.13	3.60	9.00	0.15	0.37	16x25	HLHT2W220M#US2WPEC
	33	0.17	2.40	6.00	0.15	0.52	16x31.5	HLHT2W330M#US3WPEC
	47	0.21	1.70	4.20	0.15	0.70	18x31.5	HLHT2W470M#VS3WPEC

Additional designs on request · Weitere Designs auf Anfrage

> Ripple Current Multiplier · Wechselstrommultiplikator

Frequency [Hz]	50/60	100–120	500	1 k	10 k	100 k
Multiplier	0.8	1.0	1.2	1.3	1.5	1.5

Temperature [°C]	60	65	70	75	80	85	90	95	100	105	110	115	120	125
Multiplier I_r at 100 kHz	2.55	2.48	2.42	2.33	2.23	2.13	2.03	1.90	1.77	1.65	1.50	1.35	1.20	1.00

> Life Time Tests and Requirements · Anforderungen Brauchbarkeitsdauer

Life time test	Test procedure	Life time criteria
Endurance test	T_a = 125 °C; V_r, I_r applied 4000 hours	ΔC/C ≤ 20 % (of initial value) Tanδ ≤ 200 % (of specified value) I_L ≤ specified value
Useful life	T_a = 125 °C; V_r, I_r applied 6000 hours	ΔC/C ≤ 30 % (of initial value) Tanδ < 300 % (of specified value) I_L ≤ specified value

Reference Specification: IEC 60384-4

> Life Time Table and Graph · Brauchbarkeitsdauer – Tabelle und Diagramm

HUHA	Ripple Current Multiplier I_r at 120 Hz														
T_a	1.00	1.10	1.20	1.35	1.50	1.65	1.77	1.90	2.03	2.13	2.23	2.33	2.42	2.48	2.55
60°C	200	200	200	200	200	165	124	89	62	47	35	25	19	15	12
65°C	200	200	200	200	161	116	88	63	44	33	24	18	13	11	
70°C	200	200	200	154	114	82	62	44	31	23	17	13	9		
75°C	192	166	142	109	81	58	44	31	22	17	12	9			
80°C	136	117	100	77	57	41	31	22	16	12	9				
85°C	96	83	71	54	40	29	22	16	11	8					
90°C	68	59	50	38	29	21	15	11	8						
95°C	48	41	35	27	20	15	11	8							
100°C	34	29	25	19	14	10	8								
105°C	24	21	18	14	10	7									
110°C	17	15	13	10	7										
115°C	12	10	9	7											
120°C	8	7	6												
125°C	6														

khrs Max. value limited to 200 000 hours.

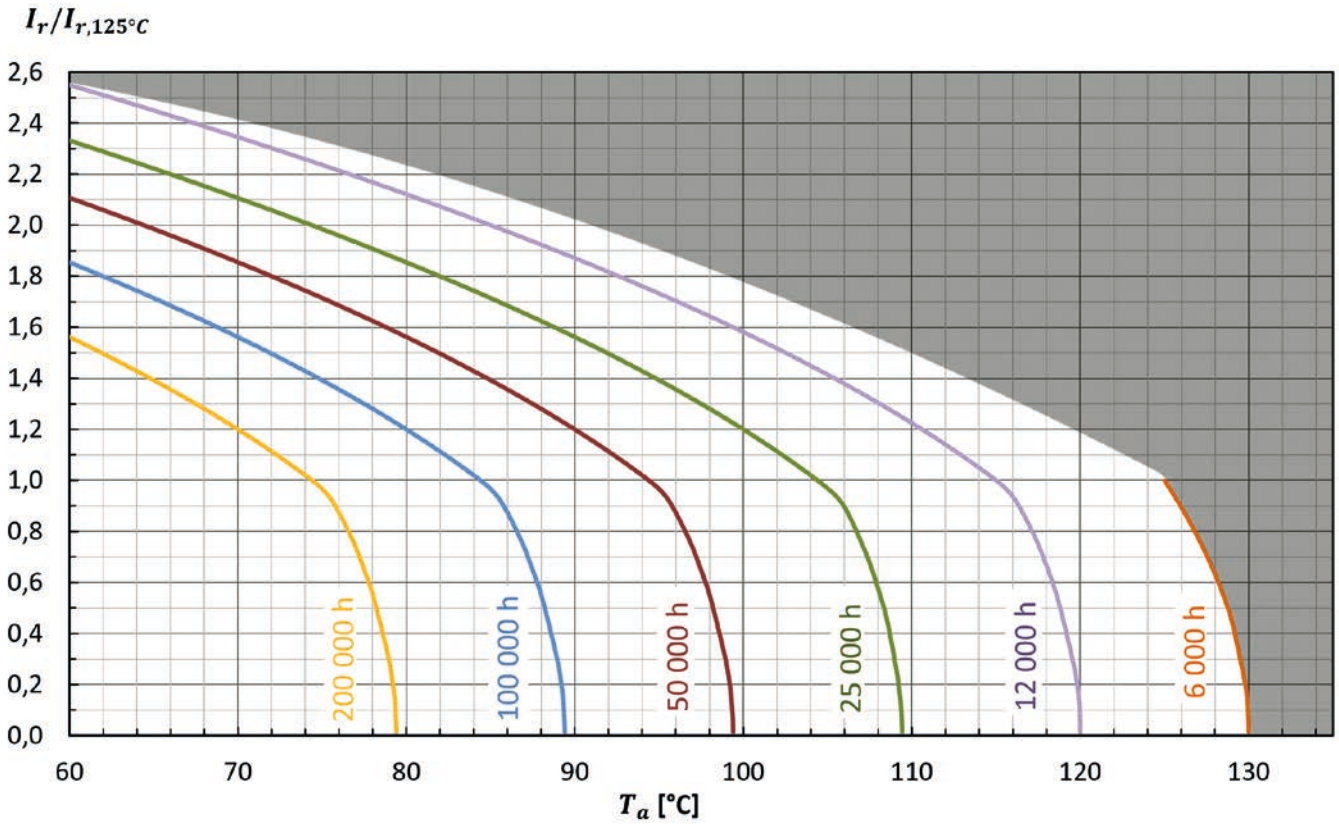

Snap-In Series Data

HP3 · HU3 · HU · HL · HL2 · DH · HUC · ZLR · ZR · ZR2

AICtech

HP3 · Snap-In · 6000 h/85 °C

Standard Performances · Compact Design

> Specifications · Spezifikationen

Items	Characteristics
Temperature range	-40°C ~ + 85°C
Capacitance tolerance (at 20°C)	Standard +/- 20%, -10%/+30% on request
Surge voltage	Repetitive max. 30 sec per 6 Minutes
Leakage current max. I_L (20°C, 5min)	0.02 • C • V_r [µA] or 3 mA, which is smaller.
Useful life	6000 hours at 85°C
Field failure rate	0.5 FIT = 0.5 • 10^{-9} Failures/hour
Reference standards	IEC 60384-4, JIS C 5101-4, AEC-Q200 qualified
Vibration	0.75mm, 10...55Hz, 10g, 3x2h
Sleeve withstanding voltage	3000 Vac/1 min between terminals bundled and plate*
Product Compliance	RoHS, REACH, Conflict Minerals a.o. - refer to p. 14–15

* Typical value using sleeve which is free from any scratches and damages

> Outline Drawings · Bauformen

Refer to page 9 for available terminal shapes and dimensions. · Auf Seite 9 finden Sie die verfügbaren Bauformen und Maße.

> Product Code · Bestellbezeichnung

Example: Series HP3 · 350 V · 1200 µF ± 20 % · 35 x 80 mm · 4-Pin terminal · without plate

HP3 2V 122 M S A S13 WPEC

Type of series

Capacitance code

The first two digits are significant. The last digit indicates the number of following zeros in µF.

Terminal symbol code

R: 2-claw 6.3 mm
S: 4-claw 6.3 mm
C: 2-claw short 4.0 mm
X: 4-claw short 4.0 mm
E: 3-claw short 4.0 mm
T: 2-lugs 4.5 mm

Diameter code

Code	ØD
W	20
X	22
Y	25
Z	30
A	35
B	40
H	46
C	50

Outer design code

None:
PET sleeve and PVC plate

WPEC:
PET sleeve without plate

Others on request

Rated voltage code

Code	Voltage	Code	Voltage	Code	Voltage
1C	16	2A	100	2G	400
1E	25	2C	160	420V	420
1V	35	2P	180	2W	450
1H	50	2D	200	2H	500
1J	63	2E	250		
1K	80	2V	350		

Capacitance tolerance

M : ± 20%
Q : -10% ~ +30%

Length code

Code	L	Code	L	Code	L
S1	20	S8	55	S15	90
S2	25	S9	60	S16	95
S3	30	S10	65	S17	100
S4	35	S11	70	S18	105
S5	40	S12	75	S19	110
S6	45	S13	80		
S7	50	S14	85		

AIC EUROPE GmbH · Sales & technical support of AIC capacitors · Telefon: +49 (0)2151-4943-5 · E-Mail: info@aic-europe.com · www.aic-europe.com

Rated VoltageCode (Surge Voltage) V_r [V DC]	Capacitance C_r [µF]	Ripple Current at 85°C/120Hz I_r [A RMS]	Ripple Current at 40°C/120Hz [A RMS]	ESR (typ) at 20°C/100Hz [mΩ]	Dissipation Factor at 20°C/100Hz Tan δ	DxL [mm]	Product Code # = variable value, see terminal code in the product code
16 VDC Code: 1C Surge Voltage 20 VDC	**6 800**	1.96	3.72	51	0.50	22x25	HP31C682M#XS2
	10 000	2.13	4.06	41	0.50	22x30	HP31C103M#XS3
		2.11	4.02	41	0.50	25x25	HP31C103M#YS2
	15 000	2.92	5.54	28	0.50	22x40	HP31C153M#XS5
		2.77	5.27	28	0.50	25x30	HP31C153M#YS3
	22 000	3.87	7.36	22	0.50	25x45	HP31C223M#YS6
		3.55	6.75	22	0.50	30x30	HP31C223M#ZS3
	33 000	4.71	8.94	17	0.50	30x45	HP31C333M#ZS6
		4.53	8.61	17	0.50	35x35	HP31C333M#AS4
	47 000	5.67	10.77	12	0.50	35x40	HP31C473M#AS5
	68 000	7.12	13.52	12	0.90	35x60	HP31C683M#AS9
	100 000	8.88	16.86	10	1.20	40x60	HP31C104M#BS9
25 VDC Code: 1E Surge Voltage 32 VDC	**4 700**	1.63	3.09	88	0.40	22x25	HP31E472M#XS2
	6 800	2.08	3.95	70	0.40	22x30	HP31E682M#XS3
		2.06	3.91	70	0.40	25x25	HP31E682M#YS2
	10 000	2.27	4.30	48	0.40	22x35	HP31E103M#XS4
		2.27	4.30	48	0.40	25x30	HP31E103M#YS3
		2.27	4.30	48	0.40	30x25	HP31E103M#ZS2
	15 000	2.94	5.58	32	0.40	25x35	HP31E153M#YS4
		2.94	5.58	32	0.40	30x30	HP31E153M#ZS3
		2.94	5.58	32	0.40	35x25	HP31E153M#AS2
	18 000	3.36	6.38	27	0.40	22x45	HP31E183M#XS6
	22 000	3.87	7.36	22	0.40	25x45	HP31E223M#YS6
		3.75	7.13	22	0.40	30x35	HP31E223M#ZS4
	33 000	4.90	9.31	17	0.50	30x50	HP31E333M#ZS7
		4.74	9.01	17	0.50	35x40	HP31E333M#AS5
35 VDC Code: 1V Surge Voltage 44 VDC	**3 300**	1.52	2.88	165	0.35	22x25	HP31V332M#XS2
	4 700	1.73	3.28	115	0.35	22x30	HP31V472M#XS3
		1.72	3.26	115	0.35	25x25	HP31V472M#YS2
	6 800	2.21	4.20	80	0.35	22x35	HP31V682M#XS4
		2.21	4.20	80	0.35	25x30	HP31V682M#YS3
		2.21	4.20	80	0.35	30x25	HP31V682M#ZS2
	10 000	2.50	4.74	55	0.35	22x45	HP31V103M#XS6
		2.40	4.55	55	0.35	25x35	HP31V103M#YS4
		2.40	4.55	55	0.35	30x30	HP31V103M#ZS3
	15 000	3.33	6.34	35	0.35	25x50	HP31V153M#YS7
		3.10	5.90	35	0.35	30x35	HP31V153M#ZS4
		3.10	5.90	35	0.35	35x30	HP31V153M#AS3
	18 000	3.48	6.60	35	0.35	30x35	HP31V183M#ZS4
		3.55	6.75	30	0.35	30x40	HP31V183M#ZS5
	20 000	3.34	6.36	28	0.35	30x40	HP31V203M#ZS5
	22 000	4.10	7.80	25	0.40	30x45	HP31V223M#ZS6
		4.14	7.85	25	0.40	35x40	HP31V223M#AS5
	27 000	4.48	8.51	25	0.45	35x35	HP31V273M#AS4
	33 000	4.84	9.20	20	0.50	30x50	HP31V333M#ZS7
		5.14	9.76	20	0.50	35x50	HP31V333M#AS7

Additional designs on request · Weitere Designs auf Anfrage

Rated VoltageCode (Surge Voltage) V_r [V DC]	Capacitance C_r [µF]	Ripple Current at 85°C/120Hz I_r [A RMS]	Ripple Current at 40°C/120Hz [A RMS]	ESR (typ) at 20°C/100Hz [mΩ]	Dissipation Factor at 20°C/100Hz Tan δ	DxL [mm]	Product Code # = variable value, see terminal code in the product code
50 VDC Code: 1H Surge Voltage 63 VDC	**2 200**	1.24	2.37	108	0.30	22x25	HP31H222M#XS2
	3 300	1.62	3.07	72	0.30	22x30	HP31H332M#XS3
		1.61	3.05	72	0.30	25x25	HP31H332M#YS2
	4 700	1.84	3.49	50	0.30	22x35	HP31H472M#XS4
		1.84	3.49	50	0.30	25x30	HP31H472M#YS3
	6 800	2.54	4.83	35	0.30	22x50	HP31H682M#XS7
		2.43	4.62	35	0.30	25x40	HP31H682M#YS5
		2.34	4.46	35	0.30	30x30	HP31H682M#ZS3
	10 000	2.73	5.18	32	0.35	25x50	HP31H103M#YS7
		2.53	4.81	32	0.35	35x30	HP31H103M#AS3
	12 000	2.90	5.51	31	0.40	30x40	HP31H123M#ZS5
	15 000	3.53	6.71	25	0.45	30x50	HP31H153M#ZS7
		3.41	6.48	25	0.45	35x40	HP31H153M#AS5
63 VDC Code: 1J Surge Voltage 79 VDC	**1 500**	1.19	2.26	159	0.25	22x25	HP31J152M#XS2
	2 200	1.32	2.51	108	0.25	22x30	HP31J222M#XS3
		1.31	2.49	108	0.25	25x25	HP31J222M#YS2
	3 300	1.72	3.26	80	0.25	22x35	HP31J332M#XS4
		1.72	3.26	80	0.25	25x30	HP31J332M#YS3
		1.72	3.26	80	0.25	30x25	HP31J332M#ZS2
	3 900	1.86	3.53	70	0.25	25x30	HP31J392M#YS3
	4 700	2.02	3.85	60	0.25	22x45	HP31J472M#XS6
		1.95	3.70	60	0.25	25x35	HP31J472M#YS4
		1.95	3.70	60	0.25	30x30	HP31J472M#ZS3
	6 800	2.66	5.06	40	0.25	25x50	HP31J682M#YS7
		2.48	4.71	40	0.25	30x35	HP31J682M#ZS4
	8 200	2.68	5.10	42	0.25	35x30	HP31J822M#AS3
	10 000	2.77	5.27	42	0.35	30x45	HP31J103M#ZS6
		2.78	5.29	35	0.35	35x40	HP31J103M#AS5
	15 000	3.70	7.02	35	0.35	35x50	HP31J153M#AS7
	27 000	5.90	11.20	20	0.35	40x80	HP31J273M#BS13
80 VDC Code: 1K Surge Voltage 100 VDC	**1 000**	0.97	1.84	230	0.20	22x25	HP31K102M#XS2
	1 200	1.06	2.00	155	0.20	22x25	HP31K122M#XS2
	1 500	1.27	2.41	155	0.20	22x30	HP31K152M#XS3
		1.24	2.37	105	0.20	25x25	HP31K152M#YS2
	2 200	1.47	2.81	105	0.20	22x40	HP31K222M#XS5
		1.41	2.67	105	0.20	25x30	HP31K222M#YS3
	3 300	1.98	3.76	70	0.25	22x50	HP31K332M#XS7
		1.89	3.60	70	0.25	25x40	HP31K332M#YS5
		1.82	3.45	70	0.25	30x30	HP31K332M#ZS3
	4 700	2.21	4.20	50	0.25	25x50	HP31K472M#YS7
		2.16	4.09	50	0.25	30x40	HP31K472M#ZS5
		2.06	3.91	50	0.25	35x30	HP31K472M#AS3

Additional designs on request · Weitere Designs auf Anfrage

Rated VoltageCode (Surge Voltage) V_r [V DC]	Capacitance C_r [µF]	Ripple Current at 85°C/120Hz I_r [A RMS]	Ripple Current at 40°C/120Hz [A RMS]	ESR (typ) at 20°C/100Hz [mΩ]	Dissipation Factor at 20°C/100Hz Tan δ	DxL [mm]	Product Code # = variable value, see terminal code in the product code
80 VDC Code: 1K Surge Voltage 100 VDC	**6 800**	2.82	5.35	35	0.25	30x50	HP31K682M#ZS7
		2.72	5.16	35	0.25	35x40	HP31K682M#AS5
	8 200	3.32	6.31	30	0.30	30x60	HP31K822M#ZS9
	10 000	3.74	7.11	25	0.30	41x50	HP31K103M#BS7
	12 000	7.70	14.63	25	0.30	35x60	HP31K123M#AS9
100 VDC Code: 2A Surge Voltage 125 VDC	**1 000**	1.03	1.97	180	0.20	22x30	HP32A102M#XS3
		1.02	1.95	180	0.20	25x25	HP32A102M#YS2
	1 500	1.34	2.55	120	0.20	22x35	HP32A152M#XS4
		1.34	2.55	120	0.20	30x25	HP32A152M#ZS2
	2 200	1.62	3.07	82	0.20	22x50	HP32A222M#XS7
		1.55	2.95	82	0.20	25x40	HP32A222M#YS5
		1.49	2.83	82	0.20	30x30	HP32A222M#ZS3
	3 300	2.07	3.93	60	0.20	25x50	HP32A332M#YS7
		2.01	3.83	60	0.20	30x40	HP32A332M#ZS5
		1.93	3.66	60	0.20	35x30	HP32A332M#AS3
	4 700	2.33	4.43	45	0.25	30x50	HP32A472M#ZS7
		2.26	4.29	45	0.25	35x40	HP32A472M#AS5
	5 600	2.45	4.66	40	0.25	35x40	HP32A562M#AS5
		2.57	4.90	40	0.25	35x45	HP32A562M#AS6
	6 800	2.95	5.60	35	0.25	35x50	HP32A682M#AS7
160 VDC Code: 2C Surge Voltage 200 VDC	**390**	1.65	3.14	365	0.15	22x25	HP32C391M#XS2
	470	1.94	3.67	305	0.15	22x30	HP32C471M#XS3
		1.91	3.64	305	0.15	25x25	HP32C471M#YS2
	560	2.23	4.25	255	0.15	22x35	HP32C561M#XS4
		2.22	4.22	255	0.15	25x30	HP32C561M#YS3
	680	2.60	4.93	210	0.15	22x40	HP32C681M#XS5
		2.46	4.69	210	0.15	25x30	HP32C681M#YS3
		2.46	4.69	210	0.15	30x25	HP32C681M#ZS2
	820	2.99	5.69	175	0.15	22x45	HP32C821M#XS6
		2.87	5.46	175	0.15	25x35	HP32C821M#YS4
		2.87	5.46	175	0.15	30x30	HP32C821M#ZS3
	1 000	3.44	6.55	145	0.15	22x50	HP32C102M#XS7
		3.30	6.27	145	0.15	25x40	HP32C102M#YS5
		3.17	6.02	145	0.15	30x30	HP32C102M#ZS3
	1 200	3.78	7.19	120	0.15	25x45	HP32C122M#YS6
		3.67	6.99	120	0.15	30x35	HP32C122M#ZS4
	1 500	4.30	8.17	95	0.15	30x40	HP32C152M#ZS5
		4.36	8.27	95	0.15	35x35	HP32C152M#AS4
	1 800	4.92	9.34	80	0.15	30x45	HP32C182M#ZS6
		4.77	9.08	80	0.15	35x35	HP32C182M#AS4
	2 200	4.51	8.57	95	0.15	35x40	HP32C222M#CAS51P
	2 500	6.35	12.07	40	0.15	35x41	HP32C252M#AL412PS
	3 300	6.98	13.27	35	0.15	35x46	HP32C332M#AL462PS
		8.11	15.40	45	0.20	41x61	HP32C332M#BS9

Additional designs on request · Weitere Designs auf Anfrage

Rated VoltageCode (Surge Voltage) V_r [V DC]	Capacitance C_r [µF]	Ripple Current at 85°C/120Hz I_r [A RMS]	Ripple Current at 40°C/120Hz [A RMS]	ESR (typ) at 20°C/100Hz [mΩ]	Dissipation Factor at 20°C/100Hz Tan δ	DxL [mm]	Product Code # = variable value, see terminal code in the product code
180 VDC Code: 2P Surge Voltage 225 VDC	**330**	1.52	2.88	375	0.15	22x25	HP32P331M#XS2
	390	1.76	3.34	320	0.15	22x30	HP32P391M#XS3
		1.74	3.30	320	0.15	25x25	HP32P391M#YS2
	470	1.94	3.67	265	0.15	22x30	HP32P471M#XS3
		1.91	3.64	265	0.15	25x25	HP32P471M#YS2
	560	2.23	4.25	225	0.15	22x35	HP32P561M#XS4
		2.23	4.25	225	0.15	25x30	HP32P561M#YS3
		2.23	4.25	225	0.15	30x25	HP32P561M#ZS2
	680	2.60	4.93	185	0.15	22x40	HP32P681M#XS5
		2.59	4.92	185	0.15	25x35	HP32P681M#YS4
		2.46	4.69	185	0.15	30x25	HP32P681M#ZS2
	820	2.99	5.69	155	0.15	25x40	HP32P821M#YS5
		2.87	5.46	155	0.15	30x30	HP32P821M#ZS3
	1 000	3.45	6.57	125	0.15	25x45	HP32P102M#YS6
		3.17	6.02	125	0.15	35x25	HP32P102M#AS2
	1 200	3.95	7.50	105	0.15	25x50	HP32P122M#YS7
		3.84	7.29	105	0.15	30x40	HP32P122M#ZS5
		4.49	8.53	85	0.15	30x45	HP32P152M#ZS6
		4.36	8.27	85	0.15	35x35	HP32P152M#AS4
	1 800	4.95	9.41	70	0.15	35x40	HP32P182M#AS5
		5.02	9.53	70	0.15	40x36	HP32P182M#BS4
200 VDC Code: 2D Surge Voltage 250 VDC	**220**	1.50	2.84	485	0.15	22x25	HP32D221M#XS2
	270	1.65	3.14	395	0.15	22x25	HP32D271M#XS2
	330	1.82	3.45	325	0.15	22x25	HP32D331M#XS2
		1.94	3.67	325	0.15	22x30	HP32D331M#XS3
	390	2.09	3.97	275	0.15	25x25	HP32D391M#YS2
	470	2.13	4.06	230	0.15	22x30	HP32D471M#XS3
		2.11	4.02	230	0.15	25x25	HP32D471M#YS2
		2.45	4.66	230	0.15	25x30	HP32D471M#YS3
		2.45	4.66	230	0.15	30x25	HP32D471M#ZS2
	560	2.48	4.71	190	0.15	22x35	HP32D561M#XS4
		2.45	4.66	190	0.15	25x30	HP32D561M#YS3
	680	2.87	5.46	160	0.15	22x40	HP32D681M#XS5
		3.15	5.97	160	0.15	25x35	HP32D681M#YS4
		3.15	5.97	160	0.15	30x30	HP32D681M#ZS3
	820	3.59	6.81	130	0.15	25x40	HP32D821M#YS5
		3.44	6.55	130	0.15	30x30	HP32D821M#ZS3
	1 000	3.81	7.23	110	0.15	25x45	HP32D102M#YS6
		4.00	7.61	110	0.15	30x35	HP32D102M#ZS4
	1 200	4.61	8.76	90	0.15	30x40	HP32D122M#ZS5
		4.04	7.67	90	0.15	35x30	HP32D122M#AS3
	1 500	4.42	8.40	75	0.15	25x51	HP32D152M#YL51
		4.74	9.01	75	0.15	35x35	HP32D152M#AS4
		5.49	10.43	75	0.15	40x36	HP32D152M#BS4

Additional designs on request · Weitere Designs auf Anfrage

Rated VoltageCode (Surge Voltage) V_r [V DC]	Capacitance C_r [µF]	Ripple Current at 85°C/120Hz I_r [A RMS]	Ripple Current at 40°C/120Hz [A RMS]	ESR (typ) at 20°C/100Hz [mΩ]	Dissipation Factor at 20°C/100Hz Tan δ	DxL [mm]	Product Code # = variable value, see terminal code in the product code
200 VDC Code: 2D Surge Voltage 250 VDC	**1 800**	5.67	10.77	60	0.15	35x45	HP32D182M#AS6
		6.42	12.21	60	0.15	35x50	HP32D182M#AS7
		6.23	11.83	60	0.15	40x41	HP32D182M#BS5
	2 200	6.68	12.68	50	0.15	35x50	HP32D222M#AS7
	2 700	6.56	12.45	50	0.15	35x50	HP32D272M#AS7
	4 700	9.36	17.78	27	0.15	35x80	HP32D472M#AS13
250 VDC Code: 2E Surge Voltage 300 VDC	**220**	1.50	2.84	485	0.15	22x25	HP32E221M#XS2
	270	1.52	2.88	395	0.15	22x25	HP32E271M#XS2
		1.76	3.34	395	0.15	22x30	HP32E271M#XS3
	330	1.79	3.41	325	0.15	22x30	HP32E331M#XS3
		2.06	3.91	325	0.15	22x35	HP32E331M#XS4
		1.76	3.34	325	0.15	25x25	HP32E331M#YS2
		2.05	3.88	325	0.15	25x30	HP32E331M#YS3
	390	2.24	4.27	275	0.15	22x35	HP32E391M#XS4
		2.24	4.27	275	0.15	25x30	HP32E391M#YS3
	470	2.59	4.92	230	0.15	22x40	HP32E471M#XS5
		2.59	4.92	230	0.15	25x35	HP32E471M#YS4
		2.62	4.97	230	0.15	35x25	HP32E471M#AS2
	560	2.73	5.18	190	0.15	22x45	HP32E561M#XS6
		2.82	5.35	190	0.15	25x35	HP32E561M#YS4
		2.85	5.41	190	0.15	30x30	HP32E561M#ZS3
	680	3.40	6.46	160	0.15	22x50	HP32E681M#XS7
		3.42	6.50	160	0.15	25x45	HP32E681M#YS6
		2.86	5.43	160	0.15	30x30	HP32E681M#ZS3
	820	3.44	6.55	130	0.15	25x45	HP32E821M#YS6
		3.31	6.29	130	0.15	30x35	HP32E821M#ZS4
	1 000	4.21	8.01	110	0.15	30x40	HP32E102M#ZS5
		4.27	8.11	110	0.15	35x35	HP32E102M#AS4
	1 200	4.39	8.34	90	0.15	30x45	HP32E122M#ZS6
		4.84	9.20	90	0.15	35x40	HP32E122M#AS5
	1 500	5.65	10.75	75	0.15	35x45	HP32E152M#AS6
		5.82	11.06	75	0.15	40x41	HP32E152M#BS5
	1 600	5.23	9.93	72	0.15	30x60	HP32E162M#ZS9
	1 800	6.42	12.21	60	0.15	35x50	HP32E182M#AS7
		6.72	12.77	60	0.15	40x51	HP32E182M#BS7
	2 100	6.94	13.19	50	0.15	30x80	HP32E212M#ZS13
	2 200	6.48	12.31	50	0.15	35x60	HP32E222M#AS9
	2 300	7.46	14.17	50	0.15	30x85	HP32E232M#ZS14
	2 700	8.67	16.47	45	0.15	30x100	HP32E272M#ZS17
350 VDC Code: 2V Surge Voltage 400 VDC	**100**	0.84	1.58	1065	0.15	22x25	HP32V101M#XS2
	120	0.92	1.76	885	0.15	22x25	HP32V121M#XS2
		0.97	1.84	885	0.15	25x25	HP32V121M#YS2
	150	1.09	2.07	710	0.15	22x30	HP32V151M#XS3
		1.08	2.05	710	0.15	25x25	HP32V151M#YS2

Additional designs on request · Weitere Designs auf Anfrage

Rated VoltageCode (Surge Voltage) V_r [V DC]	Capacitance C_r [µF]	Ripple Current at 85°C/120Hz I_r [A RMS]	Ripple Current at 40°C/120Hz [A RMS]	ESR (typ) at 20°C/100Hz [mΩ]	Dissipation Factor at 20°C/100Hz Tan δ	DxL [mm]	Product Code # = variable value, see terminal code in the product code
350 VDC Code: 2V Surge Voltage 400 VDC	**180**	1.20	2.28	590	0.15	22x30	HP32V181M#XS3
		1.27	2.41	590	0.15	22x35	HP32V181M#XS4
		1.19	2.26	590	0.15	25x25	HP32V181M#YS2
		1.27	2.41	590	0.15	30x25	HP32V181M#ZS2
	220	1.41	2.67	485	0.15	22x35	HP32V221M#XS4
		1.40	2.65	485	0.15	25x30	HP32V221M#YS3
		1.41	2.67	485	0.15	30x25	HP32V221M#ZS2
	270	1.73	3.28	395	0.15	22x45	HP32V271M#XS6
		1.64	3.11	395	0.15	25x35	HP32V271M#YS4
		1.55	2.95	395	0.15	30x25	HP32V271M#ZS2
	330	1.97	3.74	325	0.15	25x40	HP32V331M#YS5
		1.82	3.45	325	0.15	30x30	HP32V331M#ZS3
		1.82	3.45	325	0.15	35x25	HP32V331M#AS2
	390	2.16	4.09	275	0.15	25x45	HP32V391M#YS6
		2.08	3.95	275	0.15	30x35	HP32V391M#ZS4
		2.09	3.97	275	0.15	35x30	HP32V391M#AS3
	470	2.28	4.32	230	0.15	30x35	HP32V471M#ZS4
		2.30	4.37	230	0.15	35x30	HP32V471M#AS3
	560	2.73	5.18	190	0.15	30x45	HP32V561M#ZS6
		2.63	4.99	190	0.15	35x35	HP32V561M#AS4
	680	3.04	5.76	160	0.15	35x40	HP32V681M#AS5
		3.17	6.02	160	0.15	35x45	HP32V681M#AS6
		3.19	6.06	160	0.15	40x41	HP32V681M#BS5
	1 000	4.28	8.13	110	0.15	35x50	HP32V102M#AS7
		4.18	7.94	110	0.15	40x51	HP32V102M#BS7
	1 200	4.86	9.24	90	0.15	35x75	HP32V122M#AS12
		4.88	9.28	90	0.15	40x61	HP32V122M#BS9
	1 500	5.58	10.59	78	0.15	35x80	HP32V152M#AS13
		5.52	10.49	78	0.15	40x71	HP32V152M#BS11
	1 800	6.44	12.24	65	0.15	40x80	HP32V182M#BS13
	2 200	7.95	15.11	50	0.15	40x110	HP32V222M#BS19
400 VDC Code: 2G Surge Voltage 450 VDC	**82**	0.89	1.69	1259	0.20	20x25	HP32G820M#WS2
		0.91	1.74	1259	0.20	22x25	HP32G820M#XS2
	100	0.98	1.86	1065	0.20	20x25	HP32G101M#WS2
		1.01	1.93	1065	0.20	22x25	HP32G101M#XS2
		1.06	2.00	1065	0.20	25x25	HP32G101M#YS2
	120	1.14	2.18	885	0.20	20x30	HP32G121M#WS3
		1.10	2.09	885	0.20	22x25	HP32G121M#XS2
		1.17	2.21	885	0.20	25x25	HP32G121M#YS2
	140	1.25	2.39	765	0.20	25x25	HP32G141M#YS2
	150	1.36	2.60	710	0.20	20x35	HP32G151M#WS4
		1.32	2.51	710	0.20	22x30	HP32G151M#XS3
		1.30	2.46	710	0.20	25x25	HP32G151M#YS2
		1.39	2.63	710	0.20	30x25	HP32G151M#ZS2

Additional designs on request · Weitere Designs auf Anfrage

Rated VoltageCode (Surge Voltage) V_r [V DC]	Capacitance C_r [µF]	Ripple Current at 85°C/120Hz I_r [A RMS]	Ripple Current at 40°C/120Hz [A RMS]	ESR (typ) at 20°C/100Hz [mΩ]	Dissipation Factor at 20°C/100Hz Tan δ	DxL [mm]	Product Code # = variable value, see terminal code in the product code
400 VDC Code: 2G Surge Voltage 450 VDC	**180**	1.45	2.76	590	0.20	22x30	HP32G181M#XS3
		1.61	3.05	590	0.20	22x40	HP32G181M#XS5
		1.42	2.70	590	0.20	25x25	HP32G181M#YS2
		1.65	3.14	500	0.20	30x25	HP32G181M#ZS22P
	220	1.69	3.22	485	0.20	22x35	HP32G221M#XS4
		1.94	3.67	485	0.20	22x50	HP32G221M#XS7
		1.67	3.18	485	0.20	25x30	HP32G221M#YS3
		1.86	3.53	485	0.20	25x40	HP32G221M#YS5
		1.67	3.18	485	0.20	30x25	HP32G221M#ZS2
	270	1.97	3.74	395	0.20	22x30	HP32G271M#XS3
		2.07	3.93	395	0.20	22x45	HP32G271M#XS6
		1.96	3.72	395	0.20	25x35	HP32G271M#YS4
		2.07	3.93	395	0.20	25x40	HP32G271M#YS5
		2.16	4.09	395	0.20	25x45	HP32G271M#YS6
		1.86	3.53	395	0.20	30x25	HP32G271M#ZS2
		2.09	3.97	395	0.20	30x35	HP32G271M#ZS4
	330	2.39	4.53	325	0.20	22x50	HP32G331M#XS7
		2.28	4.32	325	0.20	25x40	HP32G331M#YS5
		2.49	4.72	325	0.20	25x50	HP32G331M#YS7
		2.18	4.14	325	0.20	30x30	HP32G331M#ZS3
		2.29	4.35	325	0.20	30x35	HP32G331M#ZS4
		2.18	4.14	325	0.20	35x25	HP32G331M#AS2
	390	2.48	4.71	275	0.20	25x40	HP32G391M#YS5
		2.60	4.93	275	0.20	25x45	HP32G391M#YS6
		2.71	5.14	275	0.20	25x50	HP32G391M#YS7
		2.50	4.74	275	0.20	30x35	HP32G391M#ZS4
		2.75	5.23	275	0.20	30x45	HP32G391M#ZS6
		2.38	4.51	275	0.20	35x25	HP32G391M#AS2
		2.66	5.06	275	0.20	35x35	HP32G391M#AS4
	470	2.97	5.64	230	0.20	25x50	HP32G471M#YS7
		2.87	5.46	230	0.20	30x40	HP32G471M#ZS5
		3.18	6.04	230	0.20	30x50	HP32G471M#ZS7
		2.75	5.23	230	0.20	35x30	HP32G471M#AS3
		3.04	5.76	230	0.20	35x40	HP32G471M#AS5
	560	3.28	6.23	190	0.20	30x45	HP32G561M#ZS6
		3.41	6.48	190	0.20	30x50	HP32G561M#ZS7
		3.16	6.00	190	0.20	35x35	HP32G561M#AS4
		3.44	6.55	190	0.20	35x45	HP32G561M#AS6
		3.48	6.60	190	0.20	40x41	HP32G561M#BS5
	620	3.32	6.31	175	0.20	35x35	HP32G621M#AS4
	680	3.60	6.83	160	0.20	30x45	HP32G681M#ZS6
		3.91	7.43	160	0.20	30x55	HP32G681M#ZS8
		3.64	6.92	160	0.20	35x40	HP32G681M#AS5
		4.24	8.05	160	0.20	35x60	HP32G681M#AS9
		4.05	7.69	160	0.20	40x35	HP32G681M#BS4

Additional designs on request · Weitere Designs auf Anfrage

Rated VoltageCode (Surge Voltage) V_r [V DC]	Capacitance C_r [µF]	Ripple Current at 85°C/120Hz I_r [A RMS]	Ripple Current at 40°C/120Hz [A RMS]	ESR (typ) at 20°C/100Hz [mΩ]	Dissipation Factor at 20°C/100Hz Tan δ	DxL [mm]	Product Code # = variable value, see terminal code in the product code
400 VDC Code: 2G Surge Voltage 450 VDC	**770**	4.25	8.06	150	0.20	35x50	HP32G771M#AS7
	820	3.80	7.22	130	0.20	30x60	HP32G821M#ZS9
		4.17	7.92	130	0.20	35x45	HP32G821M#AS6
		4.64	8.82	130	0.20	35x60	HP32G821M#AS9
		4.53	8.61	130	0.20	40x51	HP32G821M#BS7
	870	4.47	8.48	130	0.20	35x50	HP32G871M#AS7
	1 000	4.79	9.10	110	0.20	35x50	HP32G102M#AS7
		5.13	9.74	110	0.20	35x60	HP32G102M#AS9
		4.57	8.68	110	0.20	40x50	HP32G102M#BS7
	1 100	5.13	9.74	110	0.20	35x60	HP32G112M#AS9
		5.48	10.41	110	0.20	35x81	HP32G112M#AS13
	1 200	4.86	9.24	100	0.20	35x75	HP32G122M#AS12
		4.72	8.97	100	0.20	40x56	HP32G122M#BS8
		4.91	9.35	90	0.20	40x60	HP32G122M#BS9
		5.04	9.57	90	0.20	40x76	HP32G122M#BS12
	1 400	6.23	11.83	80	0.20	35x100	HP32G142M#AS17
		6.82	12.96	80	0.20	40x80	HP32G142M#BS13
	1 500	6.45	12.24	75	0.20	35x100	HP32G152M#AS17
		5.64	10.70	75	0.20	40x76	HP32G152M#BS12
		6.58	12.50	75	0.20	40x81	HP32G152M#BS13
	1 600	6.88	13.07	70	0.20	40x60	HP32G162M#BS9
		6.88	13.07	70	0.20	40x85	HP32G162M#BS14
	1 800	8.00	15.19	62	0.20	40x101	HP32G182M#BS17
	2 000	8.22	15.61	60	0.20	45x76	HP32G202M#HS12
	2 100	9.58	18.21	51	0.20	40x101	HP32G212M#BS17
420 VDC Code: 420V Surge Voltage 470 VDC	**68**	0.80	1.53	1620	0.20	20x25	HP3420V680M#WS2
		0.84	1.58	1620	0.20	22x25	HP3420V680M#XS2
	82	0.89	1.69	1340	0.20	20x25	HP3420V820M#WS2
		0.95	1.79	1340	0.20	22x30	HP3420V820M#XS3
	100	1.05	1.99	1100	0.20	20x30	HP3420V101M#WS3
		1.01	1.93	1100	0.20	22x25	HP3420V101M#XS2
		1.08	2.05	1100	0.20	22x30	HP3420V101M#XS3
	120	1.14	2.18	915	0.20	20x30	HP3420V121M#WS3
		1.22	2.32	915	0.20	20x35	HP3420V121M#WS4
		1.11	2.11	915	0.20	22x25	HP3420V121M#XS2
		1.24	2.37	915	0.20	22x35	HP3420V121M#XS4
		1.17	2.21	915	0.20	25x25	HP3420V121M#YS2
	150	1.36	2.60	735	0.20	20x35	HP3420V151M#WS4
		1.32	2.51	735	0.20	22x30	HP3420V151M#XS3
		1.46	2.78	735	0.20	22x40	HP3420V151M#XS5
		1.30	2.46	735	0.20	25x25	HP3420V151M#YS2
		1.45	2.76	735	0.20	25x35	HP3420V151M#YS4
	180	1.53	2.90	610	0.20	22x35	HP3420V181M#XS4
		1.67	3.18	610	0.20	22x45	HP3420V181M#XS6
		1.52	2.88	610	0.20	25x30	HP3420V181M#YS3

Additional designs on request · Weitere Designs auf Anfrage

Rated VoltageCode (Surge Voltage) V_r [V DC]	Capacitance C_r [µF]	Ripple Current at 85°C/120Hz I_r [A RMS]	Ripple Current at 40°C/120Hz [A RMS]	ESR (typ) at 20°C/100Hz [mΩ]	Dissipation Factor at 20°C/100Hz Tan δ	DxL [mm]	Product Code # = variable value, see terminal code in the product code
420 VDC Code: 420V Surge Voltage 470 VDC	**180**	1.67	3.18	610	0.20	25x40	HP3420V181M#YS5
		1.52	2.88	610	0.20	30x25	HP3420V181M#ZS2
		1.61	3.05	610	0.20	35x25	HP3420V181M#AS2
	220	1.78	3.39	500	0.20	22x40	HP3420V221M#XS5
		1.87	3.55	500	0.20	22x45	HP3420V221M#XS6
		1.77	3.37	500	0.20	25x35	HP3420V221M#YS4
		1.94	3.67	500	0.20	25x45	HP3420V221M#YS6
		1.67	3.18	500	0.20	30x25	HP3420V221M#ZS2
		1.78	3.39	500	0.20	30x30	HP3420V221M#ZS3
	270	2.07	3.93	407	0.20	22x45	HP3420V271M#XS6
		1.95	3.70	407	0.20	25x35	HP3420V271M#YS4
		1.97	3.74	407	0.20	30x30	HP3420V271M#ZS3
		2.00	3.81	407	0.20	35x25	HP3420V271M#AS2
		2.23	4.25	407	0.20	25x50	HP3420V271M#YS7
	330	2.39	4.53	335	0.20	25x45	HP3420V331M#YS6
		2.29	4.35	335	0.20	30x35	HP3420V331M#ZS4
		2.18	4.14	335	0.20	35x25	HP3420V331M#AS2
		2.45	4.66	335	0.20	35x35	HP3420V331M#AS4
	390	2.71	5.14	283	0.20	25x50	HP3420V391M#YS7
		2.50	4.74	283	0.20	30x35	HP3420V391M#ZS4
		2.85	5.41	283	0.20	30x50	HP3420V391M#ZS7
		2.51	4.76	283	0.20	35x30	HP3420V391M#AS3
		2.76	5.25	283	0.20	35x40	HP3420V391M#AS5
	470	2.87	5.46	235	0.20	30x40	HP3420V471M#ZS5
		3.00	5.71	235	0.20	30x45	HP3420V471M#ZS6
		2.50	4.75	240	0.20	35x30	HP3420V471M#AS3
		2.89	5.50	235	0.20	35x35	HP3420V471M#AS4
		3.03	5.75	235	0.20	35x40	HP3420V471M#AS5
		3.17	6.02	235	0.20	35x45	HP3420V471M#AS6
		3.28	6.23	235	0.20	35x50	HP3420V471M#AS7
		3.18	6.04	235	0.20	40x41	HP3420V471M#BS5
	560	3.41	6.48	200	0.20	30x50	HP3420V561M#ZS7
		3.31	6.29	200	0.20	35x40	HP3420V561M#AS5
		3.44	6.55	200	0.20	35x45	HP3420V561M#AS6
		3.60	6.83	200	0.20	35x50	HP3420V561M#AS7
	680	3.75	7.13	170	0.20	30x50	HP3420V681M#ZS7
		3.80	7.22	165	0.20	35x45	HP3420V681M#AS6
		3.95	7.50	165	0.20	35x50	HP3420V681M#AS7
	820	3.84	7.29	135	0.20	30x75	HP3420V821M#ZS12
		4.33	8.24	135	0.20	35x50	HP3420V821M#AS7
	1 000	4.44	8.45	112	0.20	35x75	HP3420V102M#AS12
		4.30	8.17	112	0.20	40x56	HP3420V102M#BS8
		4.48	8.50	112	0.20	40x61	HP3420V102M#BS9
	1 200	4.99	9.49	135	0.20	35x80	HP3420V122M#AS13

Additional designs on request · Weitere Designs auf Anfrage

Rated VoltageCode (Surge Voltage) V_r [V DC]	Capacitance C_r [µF]	Ripple Current at 85°C/120Hz I_r [A RMS]	Ripple Current at 40°C/120Hz [A RMS]	ESR (typ) at 20°C/100Hz [mΩ]	Dissipation Factor at 20°C/100Hz Tan δ	DxL [mm]	Product Code # = variable value, see terminal code in the product code
420 VDC Code: 420V Surge Voltage 470 VDC	**1 200**	5.49	10.43	100	0.20	35x100	HP3420V122M#AS17
		5.05	9.59	100	0.20	40x76	HP3420V122M#BS12
	1 500	5.96	11.33	75	0.20	40x86	HP3420V152M#BS14
		7.12	13.52	80	0.20	45x76	HP3420V152M#HS12
	1 800	6.95	13.21	70	0.20	40x101	HP3420V182M#BS17
		7.79	14.80	70	0.20	45x76	HP3420V182M#HS12
	2 000	8.22	15.61	60	0.20	45x76	HP3420V202M#HS12
450 VDC Code: 2W Surge Voltage 500 VDC	**56**	0.74	1.40	1965	0.20	20x25	HP32W560M#WS2
	68	0.80	1.53	1620	0.20	20x25	HP32W680M#WS2
	82	0.89	1.69	1340	0.20	20x25	HP32W820M#WS2
		0.95	1.79	1340	0.20	20x30	HP32W820M#WS3
		0.91	1.74	1340	0.20	22x25	HP32W820M#XS2
		0.98	1.86	1340	0.20	22x30	HP32W820M#XS3
		0.97	1.84	1340	0.20	25x25	HP32W820M#YS2
	100	1.05	1.99	1100	0.20	20x30	HP32W101M#WS3
		1.01	1.93	1100	0.20	22x25	HP32W101M#XS2
		1.06	2.00	1100	0.20	25x25	HP32W101M#YS2
		1.13	2.16	1100	0.20	25x30	HP32W101M#YS3
		1.13	2.16	1100	0.20	30x25	HP32W101M#ZS2
	120	1.22	2.32	915	0.20	20x35	HP32W121M#WS4
		1.11	2.11	915	0.20	22x25	HP32W121M#XS2
		1.31	2.49	915	0.20	22x40	HP32W121M#XS5
		1.17	2.21	915	0.20	25x25	HP32W121M#YS2
		1.24	2.37	915	0.20	30x25	HP32W121M#ZS2
	150	1.32	2.51	735	0.20	22x30	HP32W151M#XS3
		1.39	2.63	735	0.20	22x35	HP32W151M#XS4
		1.53	2.90	735	0.20	22x45	HP32W151M#XS6
		1.30	2.47	735	0.20	25x25	HP32W151M#YS2
		1.39	2.63	735	0.20	25x30	HP32W151M#YS3
		1.47	2.81	735	0.20	25x35	HP32W151M#YS4
		1.39	2.63	735	0.20	30x25	HP32W151M#ZS2
		1.47	2.81	735	0.20	30x30	HP32W151M#ZS3
	180	1.53	2.90	610	0.20	22x35	HP32W181M#XS4
		1.76	3.34	610	0.20	22x50	HP32W181M#XS7
		1.52	2.88	610	0.20	25x30	HP32W181M#YS3
		1.67	3.18	610	0.20	25x40	HP32W181M#YS5
		1.52	2.88	610	0.20	30x25	HP32W181M#ZS2
		1.61	3.05	610	0.20	30x30	HP32W181M#ZS3
		1.61	3.05	610	0.20	35x25	HP32W181M#AS2
	220	1.78	3.39	500	0.20	22x40	HP32W221M#XS5
		1.77	3.37	500	0.20	25x35	HP32W221M#YS4
		1.94	3.67	500	0.20	25x45	HP32W221M#YS6
		1.67	3.18	500	0.20	30x25	HP32W221M#ZS2
		1.89	3.60	500	0.20	30x35	HP32W221M#ZS4

Additional designs on request · Weitere Designs auf Anfrage

Rated VoltageCode (Surge Voltage) V_r [V DC]	Capacitance C_r [µF]	Ripple Current at 85°C/120Hz I_r [A RMS]	Ripple Current at 40°C/120Hz [A RMS]	ESR (typ) at 20°C/100Hz [mΩ]	Dissipation Factor at 20°C/100Hz Tan δ	DxL [mm]	Product Code # = variable value, see terminal code in the product code
450 VDC Code: 2W Surge Voltage 500 VDC	270	2.07	3.93	407	0.20	22x45	HP32W271M#XS6
		2.06	3.91	407	0.20	25x40	HP32W271M#YS5
		2.16	4.09	407	0.20	25x45	HP32W271M#YS6
		1.97	3.74	407	0.20	30x30	HP32W271M#ZS3
		2.19	4.16	407	0.20	30x40	HP32W271M#ZS5
		1.97	3.74	407	0.20	35x25	HP32W271M#AS2
		2.22	4.22	407	0.20	35x35	HP32W271M#AS4
	330	2.27	4.30	340	0.20	25x40	HP32W331M#YS5
		2.49	4.72	335	0.20	25x50	HP32W331M#YS7
		2.29	4.35	335	0.20	30x35	HP32W331M#ZS4
		2.52	4.79	335	0.20	30x45	HP32W331M#ZS6
		2.18	4.14	335	0.20	35x25	HP32W331M#AS2
		2.45	4.66	335	0.20	35x35	HP32W331M#AS4
	390	2.71	5.14	283	0.20	25x50	HP32W391M#YS7
		2.50	4.74	283	0.20	30x35	HP32W391M#ZS4
		2.73	5.18	283	0.20	30x45	HP32W391M#ZS6
		2.51	4.76	283	0.20	35x30	HP32W391M#AS3
		2.64	5.02	283	0.20	35x35	HP32W391M#AS4
		2.76	5.25	283	0.20	35x40	HP32W391M#AS5
	470	2.87	5.46	235	0.20	30x40	HP32W471M#ZS5
		3.00	5.71	235	0.20	30x45	HP32W471M#ZS6
		3.12	5.94	235	0.20	30x50	HP32W471M#ZS7
		2.89	5.50	235	0.20	35x35	HP32W471M#AS4
		3.03	5.75	235	0.20	35x40	HP32W471M#AS5
		3.17	6.02	235	0.20	35x45	HP32W471M#AS6
		3.18	6.04	235	0.20	40x41	HP32W471M#BS5
	560	3.41	6.48	200	0.20	30x50	HP32W561M#ZS7
		3.16	6.00	200	0.20	35x36	HP32W561M#AL36
		3.31	6.29	200	0.20	35x40	HP32W561M#AS5
		3.44	6.55	200	0.20	35x45	HP32W561M#AS6
		3.41	6.48	200	0.20	35x50	HP32W561M#ZS7
		3.75	7.13	200	0.20	40x51	HP32W561M#BS7
		4.74	9.01	110	0.20	40x51	HP32W561M#BS7CCR
	630	4.04	7.67	170	0.20	30x60	HP32W631M#ZS9
		3.45	6.57	170	0.20	35x50	HP32W631M#AS7
		3.36	6.38	170	0.20	40x41	HP32W631M#BS5
	680	3.75	7.13	170	0.20	30x51	HP32W681M#ZS7
		4.19	7.96	165	0.20	30x75	HP32W681M#ZS12
		3.80	7.22	165	0.20	35x45	HP32W681M#AS6
		3.94	7.48	165	0.20	35x50	HP32W681M#AS7
		4.24	8.05	165	0.20	35x60	HP32W681M#AS9
		4.13	7.84	165	0.20	40x51	HP32W681M#BS7
	820	4.33	8.24	135	0.20	35x50	HP32W821M#AS7
		4.64	8.82	135	0.20	35x60	HP32W821M#AS9

Additional designs on request · Weitere Designs auf Anfrage

Rated VoltageCode (Surge Voltage) V_r [V DC]	Capacitance C_r [µF]	Ripple Current at 85°C/120Hz I_r [A RMS]	Ripple Current at 40°C/120Hz [A RMS]	ESR (typ) at 20°C/100Hz [mΩ]	Dissipation Factor at 20°C/100Hz Tan δ	DxL [mm]	Product Code # = variable value, see terminal code in the product code
450 VDC Code: 2W Surge Voltage 500 VDC	**820**	4.95	9.41	135	0.20	35x80	HP32W821M#AS13
		4.85	9.22	135	0.20	40x61	HP32W821M#BS9
	1 000	5.13	9.75	120	0.20	35x60	HP32W102M#AS9
		5.05	9.59	115	0.20	35x70	HP32W102M#AS11
		5.50	10.45	115	0.20	35x70	HP32W102M#AS112P
		5.47	10.38	115	0.20	35x80	HP32W102M#AS13
		6.45	12.24	115	0.20	35x80	HP32W102M#AS132P
		5.37	10.20	110	0.20	40x60	HP32W102M#BS9
	1 100	5.18	9.85	100	0.20	40x75	HP32W112M#BS12
	1 200	5.23	9.93	100	0.20	35x70	HP32W122M#AS11
		5.49	10.43	100	0.20	35x100	HP32W122M#AS17
		5.70	10.82	97	0.20	40x76	HP32W122M#BS12
		5.78	10.98	97	0.20	40x80	HP32W122M#BS13
		6.06	11.52	97	0.20	40x85	HP32W122M#BS14
	1 400	5.59	10.62	86	0.20	40x80	HP32W142M#BS13
	1 500	5.81	11.03	80	0.20	40x80	HP32W152M#BS13
		6.34	12.03	75	0.20	40x101	HP32W152M#BS17
		7.12	13.53	80	0.20	46x76	HP32W152M#HS12
	1 600	6.55	12.44	70	0.20	40x100	HP32W162M#BS17
	1 800	7.79	14.80	70	0.20	45x76	HP32W182M#HS12
	2 000	8.22	15.61	60	0.20	45x76	HP32W202M#HS12
		8.61	16.36	55	0.20	45x76	HP32W222M#HS12CC
	2 200	8.34	15.84	53	0.20	46x100	HP32W222M#HS17
	2 700	7.70	14.63	45	0.20	45x100	HP32W272M#HS17
500 VDC Code: 2H Surge Voltage 550 VDC	**56**	0.68	1.30	2135	0.20	22x30	HP32H560M#XS3
		0.65	1.23	2135	0.20	25x25	HP32H560M#YS2
	68	0.64	1.22	1410	0.20	22x25	HP32H680M#XS2
		0.79	1.51	1758	0.20	22x35	HP32H680M#XS4
	82	0.92	1.76	1458	0.20	22x40	HP32H820M#XS5
		0.85	1.61	1458	0.20	25x30	HP32H820M#YS3
	100	0.83	1.58	960	0.20	22x30	HP32H101M#XS3
		1.07	2.02	960	0.20	22x45	HP32H101M#XS6
		0.79	1.50	960	0.20	25x25	HP32H101M#YS2
		0.98	1.86	960	0.20	25x35	HP32H101M#YS4
		0.95	1.79	960	0.20	30x25	HP32H101M#ZS2
	120	0.96	1.82	800	0.20	22x35	HP32H121M#XS4
		1.22	2.32	800	0.20	22x50	HP32H121M#XS7
		0.93	1.77	800	0.20	25x30	HP32H121M#YS3
		1.13	2.16	800	0.20	25x40	HP32H121M#YS5
		1.06	2.02	800	0.20	30x25	HP32H121M#ZS2
		1.10	2.09	800	0.20	30x30	HP32H121M#ZS3
		1.10	2.09	800	0.20	35x25	HP32H121M#AS2
	150	1.13	2.15	640	0.20	22x40	HP32H151M#XS5
		1.09	2.07	640	0.20	25x35	HP32H151M#YS4

Additional designs on request · Weitere Designs auf Anfrage

Rated VoltageCode (Surge Voltage) V_r [V DC]	Capacitance C_r [µF]	Ripple Current at 85°C/120Hz I_r [A RMS]	Ripple Current at 40°C/120Hz [A RMS]	ESR (typ) at 20°C/100Hz [mΩ]	Dissipation Factor at 20°C/100Hz Tan δ	DxL [mm]	Product Code # = variable value, see terminal code in the product code
500 VDC Code: 2H Surge Voltage 550 VDC	**150**	1.32	2.51	640	0.20	25x45	HP32H151M#YS6
		1.06	2.02	640	0.20	30x25	HP32H151M#ZS2
		1.30	2.46	640	0.20	30x35	HP32H151M#ZS4
		1.43	2.72	640	0.20	35x30	HP32H151M#AS3
	180	1.35	2.56	540	0.20	22x50	HP32H181M#XS7
		1.26	2.40	540	0.20	25x40	HP32H181M#YS5
		1.52	2.88	535	0.20	25x50	HP32H181M#YS7
		1.23	2.34	535	0.20	30x30	HP32H181M#ZS3
		1.50	2.84	535	0.20	30x40	HP32H181M#ZS5
		1.23	2.35	535	0.20	35x25	HP32H181M#AS2
		1.43	2.72	535	0.20	35x30	HP32H181M#AS3
	220	1.46	2.78	440	0.20	25x45	HP32H221M#YS6
		1.43	2.72	440	0.20	30x35	HP32H221M#ZS4
		1.73	3.28	434	0.20	30x45	HP32H221M#ZS6
		1.66	3.16	434	0.20	35x35	HP32H221M#AS4
	270	1.69	3.22	360	0.20	25x50	HP32H271M#YS7
		1.57	2.99	360	0.20	30x30	HP32H271M#ZS3
		1.66	3.16	360	0.20	30x40	HP32H271M#ZS5
		1.99	3.78	360	0.20	30x50	HP32H271M#ZS7
		1.59	3.03	360	0.20	35x30	HP32H271M#AS3
		1.93	3.66	360	0.20	35x40	HP32H271M#AS5
	330	1.92	3.65	290	0.20	30x45	HP32H331M#ZS6
		1.84	3.50	290	0.20	35x35	HP32H331M#AS4
		2.12	4.04	290	0.20	35x40	HP32H331M#AS5
		2.21	4.20	290	0.20	35x45	HP32H331M#AS6
	370	1.94	3.68	265	0.20	35x30	HP32H371M#AS3
	390	2.17	4.12	250	0.20	30x50	HP32H391M#ZS7
		2.10	4.00	250	0.20	35x40	HP32H391M#AS5
		2.40	4.56	250	0.20	35x45	HP32H391M#AS6
		2.50	4.74	245	0.20	35x50	HP32H391M#AS7
	470	2.40	4.56	240	0.20	35x45	HP32H471M#AS6
		2.51	4.76	240	0.20	35x50	HP32H471M#AS7
		2.94	5.58	210	0.20	35x60	HP32H471M#AS9
		3.14	5.96	210	0.20	35x80	HP32H471M#AS13
		3.10	5.90	210	0.20	40x50	HP32H471M#BS7
	560	3.65	6.94	170	0.20	40x76	HP32H561M#BS12
	630	3.10	5.89	165	0.20	30x60	HP32H631M#ZS9
	650	3.45	6.55	175	0.20	35x61	HP32H651M#AS9
	680	3.30	6.27	150	0.20	35x50	HP32H681M#AS7
		3.25	6.17	150	0.20	40x56	HP32H681M#BS8
		4.53	8.61	140	0.20	40x100	HP32H681M#BS17
	820	3.67	6.97	140	0.20	35x75	HP32H821M#AS12
		3.72	7.06	140	0.20	40x70	HP32H821M#BS11
		4.69	8.90	140	0.20	40x100	HP32H821M#BS17

Additional designs on request · Weitere Designs auf Anfrage

Rated VoltageCode (Surge Voltage) V_r [V DC]	Capacitance C_r [µF]	Ripple Current at 85°C/120Hz I_r [A RMS]	Ripple Current at 40°C/120Hz [A RMS]	ESR (typ) at 20°C/100Hz [mΩ]	Dissipation Factor at 20°C/100Hz Tan δ	DxL [mm]	Product Code # = variable value, see terminal code in the product code
500 VDC Code: 2H Surge Voltage 550 VDC	**870**	3.81	7.23	120	0.20	35x60	HP32H871M#AS9
	1 000	4.56	8.66	115	0.20	35x100	P32H102M#AS17
		4.50	8.55	115	0.20	40x80	HP32H102M#BS13
		4.94	9.39	115	0.20	40x80	HP32H102M#BS13CC
		5.18	9.85	100	0.20	40x100	HP32H102M#BS17
	1 200	5.18	9.85	90	0.20	40x101	HP32H122M#BS17
		5.91	11.22	90	0.20	40x110	HP32H122M#BS19
	1 500	6.89	13.08	77	0.20	46x100	HP32H152M#HS17
	1 600	7.26	13.79	65	0.15	50x90	HP32H162M#CS15

Additional designs on request · Weitere Designs auf Anfrage

› Ripple Current Multiplier · Wechselstrommultiplikator

Frequency [Hz]		50/60	120	300	1k	≥ 10k
Multiplier	16V – 100V	0.70	1.00	1.10	1.20	1.20
	160V – 500V	0.70	1.00	1.18	1.34	1.45

Temperature [°C]	40	45	50	55	60	65	70	75	80	85
Multiplier	1.9	1.8	1.7	1.6	1.5	1.4	1.3	1.2	1.1	1.0

Forced cooling – Wind speed [m/sec]	v < 0.25	v ≥ 0.25	v ≥ 0.5	v ≥ 1.0	v ≥ 2.0	v ≥ 3.0
Multiplier	1.00	1.05	1.10	1.15	1.20	1.25

› Life Time Table · Brauchbarkeitsdauer – Tabelle

HP3	Useful life as function of ambient temperature and ripple current									
I_r at 85°C	x 1.0	x 1.1	x 1.2	x 1.3	x 1.4	x 1.5	x 1.6	x 1.7	x 1.8	x 1.9
T_a = 40°C	250	250	250	229	184	144	112	85	64	47
T_a = 45°C	250	216	178	145	116	91	70	54	40	
T_a = 50°C	162	136	113	91	73	57	44	34		
T_a = 55°C	102	86	71	58	46	36	28			
T_a = 60°C	64	54	45	36	29	23				
T_a = 65°C	41	34	28	23	18					
T_a = 70°C	25	21	18	14						
T_a = 75°C	16	13	11							
T_a = 80°C	10	8								
T_a = 85°C	6		khrs	Max. value limited to 250 000 hours.						

› Life Time Graph · Brauchbarkeitsdauer – Diagramm

Useful life depending on ambient temperature T_a and ripple current operating conditions I_r versus rated ripple current at the upper category temperature $I_{r,\,85°C,120Hz}$

Brauchbarkeitsdauer in Abhängigkeit von Umgebungstemperatur T_a und Wechselstrombelastung I_r im Verhältnis zur max. Wechselstrombelastung bei oberer Kategorietemperatur $I_{r,\,85°C,120Hz}$

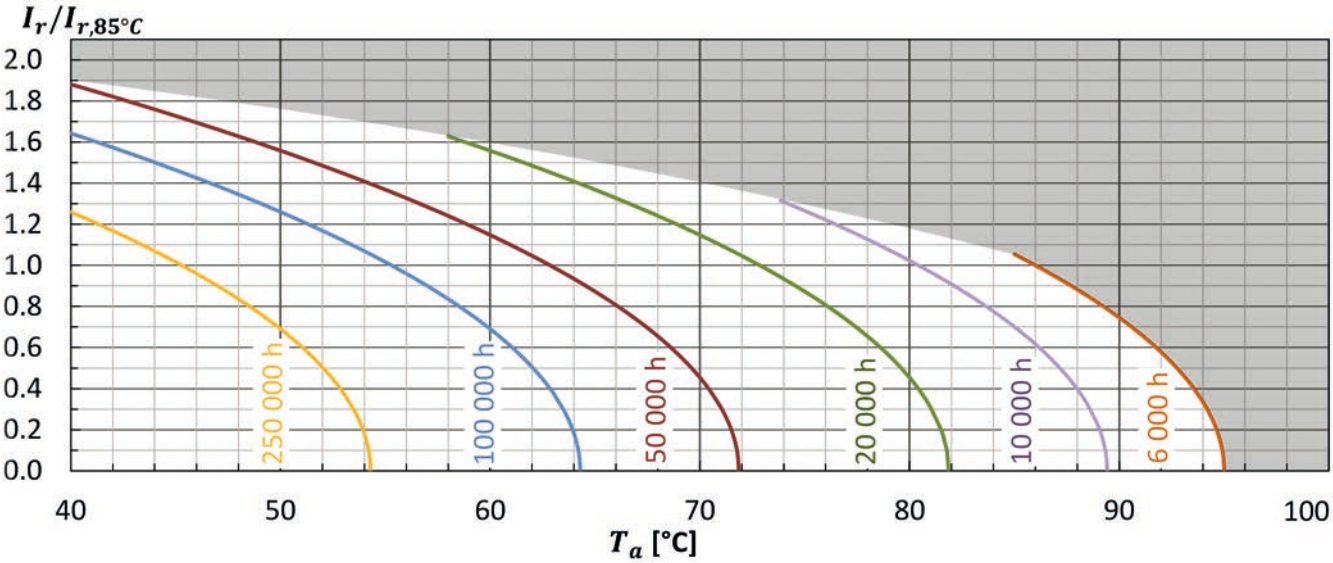

› Life Time Tests and Requirements · Anforderungen Brauchbarkeitsdauer

Life time test	Test procedure	End of Life criteria
Endurance test	T_a = 85°C; V_r, I_r applied 4000 hours	ΔC/C ≤ 15% (of initial value) Tanδ ≤ 175% (of specified value) I_L ≤ specified value
Useful life 16~350VDC	T_a = 85°C; V_r, I_r applied 6000 hours	ΔC/C ≤ 20% (of initial value) Tanδ < 200% (of specified value) I_L ≤ specified value
Useful life 400~500VDC	T_a = 85°C; V_r, I_r applied 6000 hours	ΔC/C ≤ 30% (of initial value) Tanδ < 300% (of specified value) I_L ≤ specified value

Reference Specification: JIS C 5101-4, JIS C 5102, IEC 60384-4

HU3 · Snap-In · 6000 h / 105 °C

Standard Performances · Higher Ripple

> Specifications · Spezifikationen

Items	Characteristics
Temperature range	-40°C ~ + 105°C
Capacitance tolerance (at 20°C)	Standard +/- 20%, -10%/+30% on request
Surge voltage	Repetitive max. 30 sec per 6 Minutes
Leakage current max. I_L (20°C, 5 min)	0.02 • C • V_r [µA] or 3 mA, which is smaller.
Useful life	6000 hours at 105°C
Field failure rate	0.5 FIT = 0.5 • 10^{-9} Failures/hour
Reference standards	IEC 60384-4, JIS C 5101-4, AEC-Q200 qualified
Vibration	0.75mm, 10...55Hz, 10g, 3x2h
Sleeve withstanding voltage	3000 Vac/1 min between terminals bundled and plate*
Product Compliance	RoHS, REACH, Conflict Minerals a.o. - refer to p. 14–15

* Typical value using sleeve which is free from any scratches and damages

> Outline Drawings · Bauformen

Refer to page 9 for available terminal shapes and dimensions. · Auf Seite 9 finden Sie die verfügbaren Bauformen und Maße.

> Product Code · Bestellbezeichnung

Example: Series HU3 · 400 V · 390 µF ± 20 % · 30 x 50 mm · 2-Pin terminal · without plate

HU3 2G 391 M R Z S7 WPEC

Type of series

Capacitance code

The first two digits are significant. The last digit indicates the number of following zeros in µF.

Terminal symbol code

- R: 2-claw 6.3 mm
- S: 4-claw 6.3 mm
- C: 2-claw short 4.0 mm
- X: 4-claw short 4.0 mm
- E: 3-claw short 4.0 mm
- T: 2-lugs 4.5 mm

Diameter code

Code	ØD
W	20
X	22
Y	25
Z	30
A	35
B	40
C	50

Outer design code

None:
PET sleeve and PVC plate

WPEC:
PET sleeve without plate

Others on request

Rated voltage code

Code	Voltage	Code	Voltage	Code	Voltage
1C	16	2A	100	2G	400
1E	25	2C	160	420V	420
1V	35	2P	180	2W	450
1H	50	2D	200	2H	500
1J	63	2E	250		
1K	80	2V	350		

Capacitance tolerance

- M : ± 20%
- Q : -10% ~ +30%

Length code

Code	L	Code	L	Code	L
S1	20	S8	55	S15	90
S2	25	S9	60	S16	95
S3	30	S10	65	S17	100
S4	35	S11	70	S18	105
S5	40	S12	75	S19	110
S6	45	S13	80		
S7	50	S14	85		

Rated VoltageCode (Surge Voltage) V_r [V DC]	Capacitance C_r [µF]	Ripple Current at 105°C/120Hz I_r [A RMS]	Ripple Current at 40°C/120Hz [A RMS]	ESR (typ) at 20°C/100Hz [mΩ]	Dissipation Factor at 20°C/100Hz Tan δ	DxL [mm]	Product Code # = variable value, see terminal code in the product code
16 VDC Code: 1C Surge Voltage 20 VDC	**4 700**	1.63	4.40	95	0.50	22x25	HU31C472M#XS2
	6 800	2.22	6.00	65	0.50	22x35	HU31C682M#XS4
		2.98	8.05	45	0.50	22x45	HU31C103M#XS6
		2.12	5.73	65	0.50	25x30	HU31C682M#YS3
		2.66	7.19	45	0.50	30x25	HU31C103M#ZS2
	15 000	3.69	9.95	30	0.50	25x45	HU31C153M#YS6
		3.62	9.77	30	0.50	30x35	HU31C153M#ZS4
		3.62	9.77	30	0.50	35x30	HU31C153M#AS3
	22 000	4.82	13.01	20	0.50	30x45	HU31C223M#ZS6
		4.63	12.50	20	0.50	35x35	HU31C223M#AS4
	33 000	6.38	17.23	15	0.50	35x50	HU31C333M#AS7
	47 000	3.52	9.50	15	0.50	35x50	HU31C473M#AS7
25 VDC Code: 1E Surge Voltage 32 VDC	**3 300**	1.53	4.13	130	0.40	22x25	HU31E332M#XS2
	4 700	1.94	5.23	90	0.40	22x30	HU31E472M#XS3
		1.85	4.99	90	0.40	25x25	HU31E472M#YS2
	6 800	2.49	6.71	65	0.40	22x35	HU31E682M#XS4
		2.45	6.62	65	0.40	25x30	HU31E682M#YS3
		2.45	6.62	65	0.40	30x25	HU31E682M#ZS2
	10 000	3.33	9.00	45	0.40	22x45	HU31E103M#XS6
		3.15	8.49	45	0.40	25x35	HU31E103M#YS4
		3.15	8.49	45	0.40	30x30	HU31E103M#ZS3
		3.15	8.49	45	0.40	35x25	HU31E103M#AS2
	15 000	4.13	11.14	30	0.40	25x45	HU31E153M#YS6
		4.05	10.93	30	0.40	30x35	HU31E153M#ZS4
		4.05	10.93	30	0.40	35x30	HU31E153M#AS3
	22 000	5.38	14.52	20	0.40	30x45	HU31E223M#ZS6
		5.38	14.52	20	0.40	35x40	HU31E223M#AS5
	33 000	7.13	19.25	15	0.50	35x50	HU31E333M#AS7
35 VDC Code: 1V Surge Voltage 44 VDC	**2 200**	1.33	3.59	160	0.35	22x25	HU31V222M#XS2
	3 300	1.74	4.69	105	0.35	22x30	HU31V332M#XS3
		1.66	4.48	105	0.35	25x25	HU31V332M#YS2
	4 700	2.21	5.97	75	0.35	22x35	HU31V472M#XS4
		2.18	5.88	75	0.35	25x25	HU31V472M#YS2
		2.18	5.88	75	0.35	30x25	HU31V472M#ZS2
	5 600	2.30	6.21	65	0.35	25x30	HU31V562M#YS3
	6 800	3.05	8.23	55	0.35	22x50	HU31V682M#XS7
		2.76	7.45	55	0.35	25x40	HU31V682M#YS5
		2.76	7.45	55	0.35	30x30	HU31V682M#ZS3
	8 200	3.03	8.17	45	0.35	25x40	HU31V822M#YS5
		3.03	8.17	45	0.35	35x25	HU31V822M#AS2
	10 000	3.76	10.16	35	0.35	25x50	HU31V103M#YS7
		3.53	9.53	35	0.35	30x35	HU31V103M#ZS4
		3.53	9.53	35	0.35	35x30	HU31V103M#AS3
	15 000	4.93	13.31	25	0.45	30x50	HU31V153M#ZS7
		4.76	12.86	25	0.45	35x40	HU31V153M#AS5
	22 000	6.25	16.87	20	0.50	35x50	HU31V223M#AS7

Additional designs on request · Weitere Designs auf Anfrage

Rated VoltageCode (Surge Voltage) V_r [V DC]	Capacitance C_r [µF]	Ripple Current at 105°C/120Hz I_r [A RMS]	Ripple Current at 40°C/120Hz [A RMS]	ESR (typ) at 20°C/100Hz [mΩ]	Dissipation Factor at 20°C/100Hz Tan δ	DxL [mm]	Product Code # = variable value, see terminal code in the product code
50 VDC Code: 1H Surge Voltage 63 VDC	**1 500**	1.19	3.21	215	0.30	22x25	HU31H152M#XS2
	2 200	1.53	4.13	145	0.30	22x30	HU31H222M#XS3
		1.46	3.95	145	0.30	25x25	HU31H222M#YS2
	3 300	2.00	5.41	100	0.30	22x35	HU31H332M#XS4
		1.96	5.29	100	0.30	25x30	HU31H332M#YS3
		1.97	5.32	100	0.30	30x25	HU31H332M#ZS2
	4 700	2.64	7.13	70	0.30	22x45	HU31H472M#XS6
		2.46	6.65	70	0.30	25x35	HU31H472M#YS4
		2.49	6.71	70	0.30	30x30	HU31H472M#ZS3
	6 800	3.34	9.03	50	0.30	25x50	HU31H682M#YS7
		3.15	8.49	50	0.30	30x35	HU31H682M#ZS4
		3.15	8.49	50	0.30	35x30	HU31H682M#AS3
	10 000	4.20	11.35	35	0.35	30x45	HU31H103M#ZS6
		4.20	11.35	35	0.35	35x40	HU31H103M#AS5
	15 000	5.58	15.06	25	0.35	35x50	HU31H153M#AS7
	22 000	5.87	15.85	17	0.35	40x51	HU31H223M#BS7
63 VDC Code: 1J Surge Voltage 79 VDC	**1 000**	1.07	2.88	265	0.25	22x25	HU31J102M#XS2
	1 500	1.39	3.74	180	0.25	22x30	HU31J152M#XS3
		1.32	3.56	180	0.25	25x25	HU31J152M#YS2
	2 200	1.79	4.84	120	0.25	22x35	HU31J222M#XS4
		1.74	4.69	120	0.25	25x30	HU31J222M#YS2
		1.76	4.75	120	0.25	30x25	HU31J222M#ZS2
	3 300	2.42	6.53	80	0.25	25x40	HU31J332M#YS5
		2.28	6.15	80	0.25	30x30	HU31J332M#ZS3
		2.41	6.50	80	0.25	30x35	HU31J332M#ZS4
	4 700	3.05	8.23	60	0.25	25x50	HU31J472M#YS7
		2.86	7.72	60	0.25	30x35	HU31J472M#ZS4
	5 600	3.28	8.85	50	0.25	35x35	HU31J562M#AS4
	6 800	3.78	10.22	40	0.25	30x45	HU31J682M#ZS6
		3.78	10.22	40	0.25	35x40	HU31J682M#AS5
	8 200	4.35	11.73	35	0.25	35x45	HU31J822M#AS6
	10 000	4.98	13.45	30	0.35	35x50	HU31J103M#AS7
80 VDC Code: 1K Surge Voltage 100 VDC	**1 000**	1.27	3.42	230	0.20	22x30	HU31K102M#XS3
		1.21	3.27	230	0.20	25x25	HU31K102M#YS2
	1 500	1.65	4.46	155	0.20	22x35	HU31K152M#XS4
		1.63	4.40	155	0.20	25x30	HU31K152M#YS3
		1.63	4.40	155	0.20	30x25	HU31K152M#ZS2
	2 200	2.11	5.70	105	0.20	25x40	HU31K222M#YS5
		2.08	5.61	105	0.20	30x30	HU31K222M#ZS3
		2.08	5.61	105	0.20	35x25	HU31K222M#AS2
	3 300	2.85	7.69	70	0.20	25x50	HU31K332M#YS7
		2.74	7.40	70	0.20	30x40	HU31K332M#ZS5
		2.68	7.25	70	0.20	35x30	HU31K332M#AS3
	4 700	3.65	9.86	50	0.25	30x50	HU31K472M#ZS7
		3.53	9.53	50	0.25	35x40	HU31K472M#AS5
	6 800	4.60	12.41	35	0.25	35x50	HU31K682M#AS7

Additional designs on request · Weitere Designs auf Anfrage

Rated VoltageCode (Surge Voltage) V_r [V DC]	Capacitance C_r [µF]	Ripple Current at 105°C/120Hz I_r [A RMS]	Ripple Current at 40°C/120Hz [A RMS]	ESR (typ) at 20°C/100Hz [mΩ]	Dissipation Factor at 20°C/100Hz Tan δ	DxL [mm]	Product Code # = variable value, see terminal code in the product code
100 VDC Code: 2A Surge Voltage 125 VDC	**560**	0.89	2.41	325	0.20	22x25	HU32A561M#XS2
	680	0.96	2.60	265	0.20	22x25	HU32A681M#XS2
	820	1.07	2.88	220	0.20	22x25	HU32A821M#XS2
	1 000	1.27	3.42	180	0.20	22x30	HU32A102M#XS3
		1.21	3.27	180	0.20	25x25	HU32A102M#YS2
	1 500	1.73	4.66	130	0.20	22x40	HU32A152M#XS5
		1.73	4.66	130	0.20	25x35	HU32A152M#YS4
		1.63	4.40	130	0.20	30x25	HU32A152M#ZS2
		1.89	5.11	130	0.20	30x40	HU32A152M#ZS5
	2 200	2.23	6.03	90	0.20	25x45	HU32A222M#YS6
		1.87	5.05	90	0.20	30x30	HU32A222M#ZS3
	3 300	2.95	7.96	60	0.20	30x45	HU32A332M#ZS6
		2.83	7.63	60	0.20	35x35	HU32A332M#AS4
	4 700	3.70	9.98	45	0.25	35x45	HU32A472M#AS6
160 VDC Code: 2C Surge Voltage 200 VDC	**330**	1.08	2.91	430	0.15	22x25	HU32C331M#XS2
	390	1.21	3.27	365	0.15	22x30	HU32C391M#XS3
		1.20	3.24	365	0.15	25x25	HU32C391M#YS2
	470	1.33	3.59	305	0.15	22x30	HU32C471M#XS3
		1.31	3.53	305	0.15	25x25	HU32C471M#YS2
	560	1.54	4.16	255	0.15	22x35	HU32C561M#XS4
		1.54	4.16	255	0.15	25x30	HU32C561M#YS3
		1.54	4.16	255	0.15	30x25	HU32C561M#ZS2
	680	1.78	4.81	210	0.15	22x40	HU32C681M#XS5
		1.69	4.57	210	0.15	30x25	HU32C681M#ZS2
	820	2.05	5.52	175	0.15	22x45	HU32C821M#XS6
		1.97	5.32	175	0.15	30x30	HU32C821M#ZS3
	1 000	2.37	6.39	145	0.15	25x45	HU32C102M#YS6
		2.30	6.21	145	0.15	30x35	HU32C102M#ZS4
		2.18	5.88	145	0.15	35x25	HU32C102M#AS2
	1 200	2.71	7.31	120	0.15	25x50	HU32C122M#YS7
		2.52	6.80	120	0.15	30x35	HU32C122M#ZS4
		2.52	6.80	120	0.15	35x30	HU32C122M#AS3
	1 500	3.08	8.32	95	0.15	30x45	HU32C152M#ZS6
		2.99	8.08	95	0.15	35x35	HU32C152M#AS4
	1 800	3.40	9.18	80	0.15	35x40	HU32C182M#AS5
		3.44	9.30	80	0.15	40x36	HU32C182M#BS4
180 VDC Code: 2P Surge Voltage 225 VDC	**270**	0.95	2.55	460	0.15	22x25	HU32P271M#XS2
	330	1.03	2.79	375	0.15	22x25	HU32P331M#XS2
		1.11	3.00	375	0.15	22x30	HU32P331M#XS3
		1.10	2.97	375	0.15	25x25	HU32P331M#YS2
	390	1.21	3.27	320	0.15	22x30	HU32P391M#XS3
		1.20	3.24	320	0.15	25x25	HU32P391M#YS2
	470	1.32	3.56	265	0.15	22x30	HU32P471M#XS3

Additional designs on request · Weitere Designs auf Anfrage

Rated VoltageCode (Surge Voltage) V_r [V DC]	Capacitance C_r [µF]	Ripple Current at 105°C/120Hz I_r [A RMS]	Ripple Current at 40°C/120Hz [A RMS]	ESR (typ) at 20°C/100Hz [mΩ]	Dissipation Factor at 20°C/100Hz Tan δ	DxL [mm]	Product Code # = variable value, see terminal code in the product code
180 VDC Code: 2P Surge Voltage 225 VDC	**470**	1.31	3.53	265	0.15	25x25	HU32P471M#YS2
		1.41	3.80	265	0.15	25x30	HU32P471M#YS3
	560	1.53	4.13	225	0.15	22x35	HU32P561M#XS4
		1.54	4.16	225	0.15	25x30	HU32P561M#YS3
		1.54	4.16	225	0.15	30x25	HU32P561M#ZS2
	680	1.77	4.78	185	0.15	22x40	HU32P681M#XS5
		1.79	4.84	185	0.15	25x35	HU32P681M#YS4
		1.69	4.57	185	0.15	30x25	HU32P681M#ZS2
	820	2.04	5.49	155	0.15	22x45	HU32P821M#XS6
		2.06	5.55	155	0.15	25x40	HU32P821M#YS5
		1.97	5.32	155	0.15	30x30	HU32P821M#ZS3
	1 000	2.37	6.39	125	0.15	25x45	HU32P102M#YS6
		2.30	6.21	125	0.15	30x35	HU32P102M#ZS4
		2.30	6.21	125	0.15	35x30	HU32P102M#AS3
	1 200	2.63	7.10	105	0.15	30x40	HU32P122M#ZS5
		2.52	6.80	105	0.15	35x30	HU32P122M#AS3
	1 500	3.07	8.29	85	0.15	30x45	HU32P152M#ZS6
		3.20	8.64	85	0.15	30x50	HU32P152M#ZS7
		2.99	8.08	85	0.15	35x35	HU32P152M#AS4
	1 800	3.40	9.18	70	0.15	35x40	HU32P182M#AS5
		3.44	9.30	70	0.15	40x36	HU32P182M#BS4
200 VDC Code: 2D Surge Voltage 250 VDC	**220**	1.01	2.73	485	0.15	22x25	HU32D221M#XS2
	270	1.13	3.06	395	0.15	22x25	HU32D271M#XS2
	330	1.14	3.09	325	0.15	22x25	HU32D331M#XS2
		1.33	3.59	325	0.15	22x30	HU32D331M#XS3
		1.32	3.56	325	0.15	25x25	HU32D331M#YS2
	390	1.32	3.56	275	0.15	22x30	HU32D391M#XS3
		1.53	4.13	275	0.15	22x35	HU32D391M#XS4
		1.44	3.89	275	0.15	25x25	HU32D391M#YS2
	470	1.54	4.16	230	0.15	22x35	HU32D471M#XS4
		1.95	5.26	230	0.15	22x50	HU32D471M#XS7
		1.44	3.89	230	0.15	25x25	HU32D471M#YS2
		1.69	4.57	230	0.15	30x25	HU32D471M#ZS2
	560	1.77	4.78	190	0.15	22x40	HU32D561M#XS5
		1.67	4.51	190	0.15	25x30	HU32D561M#YS3
		1.67	4.51	190	0.15	30x25	HU32D561M#ZS2
	680	1.95	5.26	160	0.15	22x40	HU32D681M#XS5
		1.96	5.29	160	0.15	25x35	HU32D681M#YS4
		1.86	5.02	160	0.15	30x25	HU32D681M#ZS2
	820	2.26	6.09	130	0.15	25x40	HU32D821M#YS5
		2.17	5.85	130	0.15	30x30	HU32D821M#ZS3
		2.16	5.82	130	0.15	35x25	HU32D821M#AS2
	1 000	2.61	7.04	110	0.15	25x45	HU32D102M#YS6
		2.52	6.80	110	0.15	30x35	HU32D102M#ZS4
		2.76	7.45	110	0.15	35x30	HU32D102M#AS3

Additional designs on request · Weitere Designs auf Anfrage

Rated VoltageCode (Surge Voltage) V_r [V DC]	Capacitance C_r [µF]	Ripple Current at 105°C/120Hz I_r [A RMS]	Ripple Current at 40°C/120Hz [A RMS]	ESR (typ) at 20°C/100Hz [mΩ]	Dissipation Factor at 20°C/100Hz Tan δ	DxL [mm]	Product Code # = variable value, see terminal code in the product code
200 VDC Code: 2D Surge Voltage 250 VDC	**1 200**	2.89	7.81	90	0.15	30x40	HU32D122M#ZS5
		2.76	7.45	90	0.15	35x30	HU32D122M#AS3
	1 500	3.40	9.18	75	0.15	35x40	HU32D152M#AS5
		3.72	10.04	75	0.15	35x45	HU32D152M#AS6
		3.77	10.19	75	0.15	40x36	HU32D152M#BS4
	1 800	3.88	10.48	60	0.15	35x45	HU32D182M#AS6
		4.41	11.91	60	0.15	35x50	HU32D182M#AS7
		4.28	11.55	60	0.15	40x41	HU32D182M#BS5
	2 200	4.07	10.99	50	0.15	35x50	HU32D222M#AS7
250 VDC Code: 2E Surge Voltage 300 VDC	**220**	1.01	2.73	445	0.15	22x25	HU32E221M#XS2
		1.10	2.97	445	0.15	22x30	HU32E221M#XS2
		1.08	2.91	445	0.15	25x25	HU32E221M#YS2
	270	1.28	3.45	360	0.15	22x35	HU32E271M#XS4
		1.19	3.21	360	0.15	25x25	HU32E271M#YS2
	330	1.41	3.80	295	0.15	22x35	HU32E331M#XS4
		1.31	3.53	295	0.15	25x25	HU32E331M#YS2
		1.41	3.80	295	0.15	30x25	HU32E331M#ZS2
	390	1.63	4.40	250	0.15	22x40	HU32E391M#XS5
		1.61	4.34	250	0.15	25x35	HU32E391M#YS4
		1.53	4.13	250	0.15	30x25	HU32E391M#ZS2
	470	1.94	5.23	210	0.15	22x50	HU32E471M#XS7
		1.86	5.02	210	0.15	25x40	HU32E471M#YS5
		1.79	4.84	210	0.15	30x30	HU32E471M#ZS3
		1.78	4.81	210	0.15	35x25	HU32E471M#AS2
	560	2.12	5.73	175	0.15	25x45	HU32E561M#YS6
		2.06	5.55	175	0.15	30x35	HU32E561M#ZS4
		1.96	5.29	175	0.15	35x25	HU32E561M#AS2
	680	2.44	6.59	145	0.15	25x50	HU32E681M#YS7
		2.27	6.12	145	0.15	30x35	HU32E681M#ZS4
		2.27	6.12	145	0.15	35x30	HU32E681M#AS3
	820	2.73	7.37	120	0.15	30x45	HU32E821M#ZS6
		2.65	7.16	120	0.15	35x35	HU32E821M#AS4
	1 000	3.04	8.20	100	0.15	35x40	HU32E102M#AS5
		3.08	8.32	100	0.15	40x36	HU32E102M#BS4
	1 200	3.45	9.33	85	0.15	35x45	HU32E122M#AS6
		3.49	9.41	85	0.15	40x41	HU32E122M#BS5
	1 500	3.86	10.42	65	0.15	35x45	HU32E152M#AS6
		4.03	10.87	65	0.15	35x50	HU32E152M#AS7
	1 800	4.62	12.47	55	0.15	40x51	HU32E182M#BS7
	2 200	4.91	13.25	45	0.15	40x60	HU32E222M#BS9
300 VDC Code: 300V Surge Voltage 350 VDC	**680**	2.43	6.56	180	0.15	30x50	HU3300V681M#ZS7
	750	2.55	6.89	165	0.15	30x50	HU3300V751M#ZS7
	1 000	2.74	7.40	165	0.15	35x50	HU3300V102M#AS7
	2 000	4.68	12.62	55	0.15	40x85	HU3300V202M#BS14
	2 200	5.23	14.11	40	0.15	40x100	HU3300V222M#BS17
		6.19	16.72	40	0.15	40x110	HU3300V222M#BS19

Additional designs on request · Weitere Designs auf Anfrage

Rated VoltageCode (Surge Voltage) V_r [V DC]	Capacitance C_r [µF]	Ripple Current at 105°C/120Hz I_r [A RMS]	Ripple Current at 40°C/120Hz [A RMS]	ESR (typ) at 20°C/100Hz [mΩ]	Dissipation Factor at 20°C/100Hz Tan δ	DxL [mm]	Product Code # = variable value, see terminal code in the product code
350 VDC Code: 2V Surge Voltage 400 VDC	**82**	0.52	1.40	1126	0.15	22x25	HU32V820M#XS2
	100	0.62	1.66	924	0.15	22x30	HU32V101M#XS3
		0.61	1.63	924	0.15	25x25	HU32V101M#YS2
	120	0.63	1.69	770	0.15	22x25	HU32V121M#XS2
		0.67	1.81	770	0.15	22x30	HU32V121M#XS3
		0.66	1.78	770	0.15	25x25	HU32V121M#YS2
	150	0.75	2.02	615	0.15	22x30	HU32V151M#XS3
		0.79	2.14	615	0.15	22x35	HU32V151M#XS4
		0.74	1.99	615	0.15	25x25	HU32V151M#YS2
	180	0.87	2.35	520	0.15	22x35	HU32V181M#XS4
		0.87	2.35	520	0.15	25x30	HU32V181M#YS3
		0.87	2.35	520	0.15	30x25	HU32V181M#ZS2
	220	1.06	2.85	450	0.15	22x45	HU32V221M#XS6
		1.01	2.73	450	0.15	25x35	HU32V221M#YS4
		0.96	2.58	450	0.15	30x25	HU32V221M#ZS2
	270	1.18	3.18	366	0.15	25x40	HU32V271M#YS5
		1.13	3.06	366	0.15	30x30	HU32V271M#ZS3
		1.12	3.03	366	0.15	35x25	HU32V271M#AS2
	330	1.36	3.68	299	0.15	25x45	HU32V331M#YS6
		1.32	3.56	299	0.15	30x35	HU32V331M#ZS4
		1.24	3.36	299	0.15	35x25	HU32V331M#AS2
	390	1.50	4.04	253	0.15	30x40	HU32V391M#ZS5
		1.43	3.86	253	0.15	35x30	HU32V391M#AS3
	470	1.65	4.46	210	0.15	35x35	HU32V471M#AS4
		1.76	4.75	210	0.15	40x36	HU32V471M#BS4
	560	1.96	5.29	181	0.15	30x50	HU32V561M#ZS7
		1.89	5.11	181	0.15	35x40	HU32V561M#AS5
		1.98	5.35	181	0.15	40x41	HU32V561M#BS5
	1 000	2.85	7.69	90	0.15	35x51	HU32V102M#AS7
400 VDC Code: 2G Surge Voltage 450 VDC	**68**	0.57	1.54	1300	0.15	22x25	HU32G680M#XS2
	82	0.66	1.78	1080	0.15	22x30	HU32G820M#XS3
		0.66	1.78	1080	0.15	25x25	HU32G820M#YS2
	100	0.63	1.69	890	0.15	22x25	HU32G101M#XS2
		0.74	1.99	890	0.15	22x30	HU32G101M#XS3
		0.73	1.96	890	0.15	25x25	HU32G101M#YS2
	120	0.86	2.32	740	0.15	22x35	HU32G121M#XS4
		0.85	2.29	740	0.15	25x30	HU32G121M#YS3
		0.86	2.32	740	0.15	30x25	HU32G121M#ZS2
	150	0.87	2.35	590	0.15	22x35	HU32G151M#XS4
		0.87	2.35	590	0.15	25x30	HU32G151M#YS3
		0.87	2.35	590	0.15	30x25	HU32G151M#ZS2
	180	1.00	2.70	490	0.15	22x40	HU32G181M#XS5
		1.00	2.70	490	0.15	25x35	HU32G181M#YS4
		0.96	2.58	490	0.15	30x25	HU32G181M#ZS2
		1.11	3.00	490	0.15	35x25	HU32G181M#AS2

Additional designs on request · Weitere Designs auf Anfrage

Rated VoltageCode (Surge Voltage) V_r [V DC]	Capacitance C_r [µF]	Ripple Current at 105°C/120Hz I_r [A RMS]	Ripple Current at 40°C/120Hz [A RMS]	ESR (typ) at 20°C/100Hz [mΩ]	Dissipation Factor at 20°C/100Hz Tan δ	DxL [mm]	Product Code # = variable value, see terminal code in the product code
400 VDC Code: 2G Surge Voltage 450 VDC	**220**	1.17	3.15	400	0.15	25x40	HU32G221M#YS5
		1.12	3.03	400	0.15	30x30	HU32G221M#ZS3
		1.12	3.03	400	0.15	35x25	HU32G221M#AS2
	270	1.35	3.65	330	0.15	25x45	HU32G271M#YS6
		1.31	3.53	330	0.15	30x35	HU32G271M#ZS4
		1.24	3.36	330	0.15	35x25	HU32G271M#AS2
	330	1.52	4.10	270	0.15	30x40	HU32G331M#ZS5
		1.73	4.66	270	0.15	30x45	HU32G331M#ZS6
		1.45	3.92	270	0.15	35x30	HU32G331M#AS3
		1.67	4.51	270	0.15	35x35	HU32G331M#AS4
	390	1.96	5.29	230	0.15	30x50	HU32G391M#ZS7
		1.66	4.48	230	0.15	35x35	HU32G391M#AS4
		1.90	5.14	230	0.15	35x40	HU32G391M#AS5
		1.91	5.17	230	0.15	40x36	HU32G391M#BS4
	470	1.98	5.35	190	0.15	35x45	HU32G471M#AS6
		2.26	6.09	190	0.15	35x50	HU32G471M#AS7
		2.18	5.88	190	0.15	40x41	HU32G471M#BS5
	560	2.23	6.03	160	0.15	30x55	HU32G561M#ZS8
		2.17	5.85	160	0.15	35x45	HU32G561M#AS6
		2.45	6.62	160	0.15	35x50	HU32G561M#AS7
		2.77	7.48	100	0.15	35x50	HU32G821M#AS72P
		2.29	6.18	160	0.15	40x36	HU32G561M#BS4
	680	2.65	7.16	130	0.15	35x50	HU32G681M#AS7
		2.90	7.84	130	0.15	35x60	HU32G681M#AS9
	820	3.30	8.91	90	0.15	35x55	HU32G821M#AS82PCC
		3.18	8.58	110	0.15	35x60	HU32G821M#AS9
		3.27	8.82	110	0.15	40x61	HU32G821M#BS9
	1 000	3.22	8.70	80	0.15	35x60	HU32G102M#AS9
		3.52	9.50	90	0.15	40x76	HU32G102M#BS12
		3.80	10.25	90	0.15	41x81	HU32G102M#BS13
	1 200	3.75	10.13	75	0.15	40x75	HU32G122M#BS12
		3.61	9.74	75	0.15	40x86	HU32G122M#BS14
	1 500	4.95	13.37	68	0.15	35x100	HU32G152M#AS17
		4.95	13.37	60	0.15	40x100	HU32G152M#BS17
420 VDC Code: 420V Surge Voltage 470 VDC	**47**	0.42	1.13	1880	0.15	22x25	HU3420V470M#XS2
	68	0.55	1.49	1300	0.15	22x30	HU3420V680M#XS3
	82	0.57	1.54	1080	0.15	22x25	HU3420V820M#XS2
		0.59	1.60	1080	0.15	22x30	HU3420V820M#XS3
		0.59	1.60	1080	0.15	25x25	HU3420V820M#YS2
	100	0.67	1.81	890	0.15	22x30	HU3420V101M#XS3
		0.67	1.81	890	0.15	25x25	HU3420V101M#YS2
	120	0.78	2.11	740	0.15	22x35	HU3420V121M#XS4
		0.73	1.96	740	0.15	25x25	HU3420V121M#YS2
		0.77	2.08	740	0.15	30x25	HU3420V121M#ZS2

Additional designs on request · Weitere Designs auf Anfrage

Rated VoltageCode (Surge Voltage) V_r [V DC]	Capacitance C_r [µF]	Ripple Current at 105°C/120Hz I_r [A RMS]	Ripple Current at 40°C/120Hz [A RMS]	ESR (typ) at 20°C/100Hz [mΩ]	Dissipation Factor at 20°C/100Hz Tan δ	DxL [mm]	Product Code # = variable value, see terminal code in the product code
420 VDC Code: 420V Surge Voltage 470 VDC	**150**	0.91	2.47	590	0.15	22x40	HU3420V151M#XS5
		0.87	2.35	590	0.15	25x30	HU3420V151M#YS3
		0.87	2.35	590	0.15	30x25	HU3420V151M#ZS2
	180	1.00	2.70	490	0.15	25x35	HU3420V181M#YS4
		0.96	2.58	490	0.15	30x25	HU3420V181M#ZS2
		1.00	2.70	490	0.15	30x30	HU3420V181M#ZS3
		0.99	2.67	490	0.15	35x25	HU3420V181M#AS2
	220	1.22	3.30	400	0.15	25x45	HU3420V221M#YS6
		1.12	3.03	400	0.15	30x30	HU3420V221M#ZS3
		1.16	3.12	400	0.15	30x35	HU3420V221M#ZS4
		1.12	3.03	400	0.15	35x25	HU3420V221M#AS2
	270	1.31	3.53	330	0.15	30x35	HU3420V271M#ZS4
		1.34	3.62	330	0.15	30x40	HU3420V271M#ZS5
		1.31	3.53	330	0.15	35x30	HU3420V271M#AS3
		1.35	3.65	330	0.15	35x35	HU3420V271M#AS4
	330	1.58	4.28	270	0.15	30x45	HU3420V331M#ZS6
		1.64	4.43	270	0.15	30x50	HU3420V331M#ZS7
		1.53	4.13	270	0.15	35x35	HU3420V331M#AS4
		1.55	4.19	270	0.15	35x40	HU3420V331M#AS5
	390	1.74	4.69	230	0.15	35x40	HU3420V391M#AS5
		1.77	4.78	230	0.15	35x45	HU3420V391M#AS6
	470	2.04	5.49	200	0.15	35x50	HU3420V471M#AS7
		2.28	6.16	170	0.15	35x50	HU32W471M#AS72P
450 VDC Code: 2W Surge Voltage 500 VDC	**47**	0.46	1.25	1880	0.15	22x25	HU32W470M#XS2
	68	0.52	1.40	1300	0.15	22x25	HU32W680M#XS2
		0.61	1.63	1300	0.15	22x30	HU32W680M#XS3
		0.59	1.60	1300	0.15	25x25	HU32W680M#YS2
	82	0.61	1.63	1080	0.15	22x30	HU32W820M#XS3
		0.70	1.90	1080	0.15	22x35	HU32W820M#XS4
		0.61	1.63	1080	0.15	25x25	HU32W820M#YS2
		0.70	1.90	1080	0.15	25x30	HU32W820M#YS3
	100	0.72	1.93	890	0.15	22x35	HU32W101M#XS4
		0.81	2.20	890	0.15	22x40	HU32W101M#XS5
		0.70	1.90	890	0.15	25x30	HU32W101M#YS3
		0.81	2.20	890	0.15	25x35	HU32W101M#YS4
		0.78	2.11	890	0.15	30x25	HU32W101M#ZS2
	120	0.83	2.23	740	0.15	22x40	HU32W121M#XS5
		0.94	2.52	740	0.15	22x45	HU32W121M#XS6
		0.78	2.11	740	0.15	25x30	HU32W121M#YS3
		0.88	2.38	740	0.15	25x35	HU32W121M#YS4
		0.78	2.11	740	0.15	30x25	HU32W121M#ZS2
		0.90	2.44	740	0.15	30x30	HU32W121M#ZS3
		0.90	2.44	740	0.15	35x25	HU32W121M#AS2
	150	0.97	2.61	590	0.15	25x40	HU32W151M#YS5
		1.10	2.97	590	0.15	25x45	HU32W151M#YS6

Additional designs on request · Weitere Designs auf Anfrage

Rated VoltageCode (Surge Voltage) V_r [V DC]	Capacitance C_r [µF]	Ripple Current at 105°C/120Hz I_r [A RMS]	Ripple Current at 40°C/120Hz [A RMS]	ESR (typ) at 20°C/100Hz [mΩ]	Dissipation Factor at 20°C/100Hz Tan δ	DxL [mm]	Product Code # = variable value, see terminal code in the product code
450 VDC Code: 2W Surge Voltage 500 VDC	150	0.92	2.49	590	0.15	30x30	HU32W151M#ZS3
		1.06	2.85	590	0.15	30x35	HU32W151M#ZS4
		0.92	2.49	590	0.15	35x25	HU32W151M#AS3
		1.06	2.85	590	0.15	35x30	HU32W151M#AS3
	180	1.11	3.00	490	0.15	25x45	HU32W181M#YS6
		1.25	3.39	490	0.15	25x50	HU32W181M#YS7
		1.01	2.73	490	0.15	30x30	HU32W181M#ZS3
		1.17	3.15	490	0.15	30x35	HU32W181M#ZS4
		1.01	2.73	490	0.15	35x25	HU32W181M#AS2
		1.17	3.15	490	0.15	35x30	HU32W181M#AS3
	220	1.18	3.18	400	0.15	30x35	HU32W221M#ZS4
		1.34	3.62	400	0.15	30x40	HU32W221M#ZS5
		1.19	3.21	400	0.15	35x30	HU32W221M#AS3
		1.38	3.72	400	0.15	35x35	HU32W221M#AS4
	270	1.43	3.86	330	0.15	30x45	HU32W271M#ZS6
		1.63	4.40	330	0.15	30x50	HU32W271M#ZS7
		1.51	4.07	330	0.15	35x35	HU32W271M#AS4
		1.57	4.25	330	0.15	35x40	HU32W271M#AS5
	330	1.84	4.97	255	0.20	35x35	HU32W331M#AS42PCC
		1.60	4.31	270	0.15	35x40	HU32W331M#AS5
		1.80	4.87	270	0.15	35x45	HU32W331M#AS6
	390	1.80	4.87	230	0.15	35x45	HU32W391M#AS6
		2.05	5.52	230	0.15	35x50	HU32W391M#AS7
	470	2.11	5.70	200	0.15	30x60	HU32W471M#ZS9
		2.24	6.06	200	0.15	35x50	HU32W471M#AS7
		2.33	6.30	200	0.15	35x55	HU32W471M#AS8
	560	2.80	7.56	150	0.20	35x55	HU32W561M#AS82PCC
		2.55	6.89	180	0.15	35x60	HU32W561M#AS9
		2.70	7.28	180	0.15	40x61	HU32W561M#BS9
		2.84	7.66	180	0.15	40x75	HU32W561M#BS12
	680	2.71	7.32	150	0.15	35x50	HU32W681M#AS72P
		2.48	6.70	150	0.15	35x60	HU32W681M#AS9
		3.01	8.14	150	0.15	35x75	HU32W681M#AS12
		3.06	8.26	150	0.15	40x61	HU32W681M#BS9
	750	3.26	8.79	128	0.15	35x81	HU32W751M#AS13
		3.01	8.14	128	0.15	40x61	HU32W751M#BS9
		3.37	9.09	128	0.15	40x81	HU32W751M#BS13
	820	2.67	7.21	125	0.15	35x70	HU32W821M#AS11
		3.39	9.15	110	0.15	35x80	HU32W821M#AS13
		2.84	7.66	110	0.15	40x76	HU32W821M#BS12
		3.43	9.27	110	0.15	40x91	HU32W821M#BS15
	1 000	3.80	10.25	100	0.15	40x76	HU32W102M#BS12
	1 200	3.80	10.25	70	0.15	40x100	HU32W122M#BS17
		3.64	9.83	83	0.15	41x86	HU32W122M#BS14
	1 300	3.97	10.72	69	0.15	40x96	HU32W132M#BS16

Additional designs on request · Weitere Designs auf Anfrage

Rated VoltageCode (Surge Voltage) V_r [V DC]	Capacitance C_r [µF]	Ripple Current at 105°C/120Hz I_r [A RMS]	Ripple Current at 40°C/120Hz [A RMS]	ESR (typ) at 20°C/100Hz [mΩ]	Dissipation Factor at 20°C/100Hz Tan δ	DxL [mm]	Product Code # = variable value, see terminal code in the product code
500 VDC Code: 2H Surge Voltage 550 VDC	**39**	0.39	1.04	2440	0.20	22x30	HU32H390M#XS3
	47	0.45	1.22	2030	0.20	22x35	HU32H470M#XS4
	56	0.52	1.40	1700	0.20	22x40	HU32H560M#XS5
	68	0.59	1.60	1400	0.20	22x45	HU32H680M#XS6
		0.54	1.46	1400	0.20	30x25	HU32H680M#ZS2
	82	0.68	1.84	1165	0.20	22x45	HU32H820M#XS5
		0.68	1.84	1165	0.20	22x50	HU32H820M#XS7
		0.64	1.72	1165	0.20	25x40	HU32H820M#YS5
		0.63	1.69	1165	0.20	30x30	HU32H820M#ZS3
		0.62	1.66	1165	0.20	35x25	HU32H820M#AS2
	100	0.74	1.99	960	0.20	25x45	HU32H101M#YS6
		0.73	1.96	960	0.20	30x35	HU32H101M#ZS4
		0.73	1.96	960	0.20	35x30	HU32H101M#AS3
	120	0.85	2.29	800	0.20	25x50	HU32H121M#YS7
		0.79	2.14	800	0.20	30x35	HU32H121M#ZS4
		0.84	2.26	800	0.20	30x40	HU32H121M#ZS5
		0.79	2.14	800	0.20	35x30	HU32H121M#AS3
	150	0.95	2.55	640	0.20	25x50	HU32H151M#YS7
		0.94	2.52	640	0.20	30x40	HU32H151M#ZS5
		0.97	2.61	640	0.20	30x45	HU32H151M#ZS6
		0.94	2.52	640	0.20	35x35	HU32H151M#AS4
	180	1.11	3.00	535	0.20	30x50	HU32H181M#ZS7
		1.07	2.88	535	0.20	35x40	HU32H181M#AS5
	220	1.18	3.18	434	0.20	35x40	HU32H221M#AS5
		1.23	3.33	434	0.20	35x45	HU32H221M#AS6
	250	1.36	3.68	390	0.20	30x55	HU32H251M#ZS8
	270	1.42	3.83	360	0.20	35x50	HU32H271M#AS7
	330	1.57	4.25	290	0.20	35x50	HU32H331M#AS7
		1.68	4.54	290	0.20	35x60	HU32H331M#AS9
	390	1.83	4.93	245	0.20	35x60	HU32H391M#AS9
		1.90	5.14	245	0.20	35x75	HU32H391M#AS12
	470	2.01	5.43	210	0.20	35x60	HU32H471M#AS9
		2.17	5.85	210	0.20	35x85	HU32H471M#AS14
		2.09	5.64	210	0.20	40x61	HU32H471M#BS9
		2.17	5.85	210	0.20	40x76	HU32H471M#BS12
	560	2.42	6.53	188	0.20	40x81	HU32H561M#BS13
	680	2.67	7.22	140	0.20	40x81	HU32H681M#BS13
	820	3.21	8.67	128	0.20	40x101	HU32H821M#BS17
	1 000	3.78	10.22	100	0.20	50x85	HU32H821M#CS14

Additional designs on request · Weitere Designs auf Anfrage

› Ripple Current Multiplier · Wechselstrommultiplikator

Frequency [Hz]		50/60	120	300	1k	≥ 10k
Multiplier	16V – 100V	0.70	1.00	1.10	1.20	1.20
	160V – 500V	0.70	1.00	1.18	1.34	1.45

Temperature [°C]	40	45	50	55	60	65	70	75	80	85	90	95	100	105
Multiplier	2.7	2.6	2.5	2.4	2.3	2.2	2.1	2.0	1.9	1.8	1.5	1.2	1.1	1.0

Forced cooling – Wind speed [m/sec]	v < 0.25	v ≥ 0.25	v ≥ 0.5	v ≥ 1.0	v ≥ 2.0	v ≥ 3.0
Multiplier	1.00	1.05	1.10	1.15	1.20	1.25

› Life Time Table · Brauchbarkeitsdauer – Tabelle

HU3	Useful life as function of ambient temperature and ripple current												
I_r at 105°C	x 1.0	x 1.2	x 1.5	x 1.8	x 1.9	x 2.0	x 2.1	x 2.2	x 2.3	x 2.4	x 2.5	x 2.6	x 2.7
T_a = 40°C	250	250	250	250	250	250	250	250	250	250	250	250	214
T_a = 45°C	250	250	250	250	250	250	250	250	250	245	203	166	
T_a = 50°C	250	250	250	250	250	250	250	222	186	155	128		
T_a = 55°C	250	250	250	250	227	195	166	140	118	98			
T_a = 60°C	250	250	243	165	143	123	105	88	74				
T_a = 65°C	250	211	154	104	90	78	66	56					
T_a = 70°C	158	133	97	66	57	49	42						
T_a = 75°C	100	84	61	41	36	31							
T_a = 80°C	63	53	39	26	22								
T_a = 85°C	40	33	24	16									
T_a = 90°C	25	21	15										
T_a = 95°C	16	13											
T_a = 100°C	10												
T_a = 105°C	6		khrs	Max. value limited to 250 000 hours.									

› Life Time Graph · Brauchbarkeitsdauer – Diagramm

Useful life depending on ambient temperature T_a and ripple current operating conditions I_r versus rated ripple current at the upper category temperature $I_{r,\ 105°C,120Hz}$

Brauchbarkeitsdauer in Abhängigkeit von Umgebungstemperatur T_a und Wechselstrombelastung I_r im Verhältnis zur max. Wechselstrombelastung bei oberer Kategorietemperatur $I_{r,\ 105°C,120Hz}$

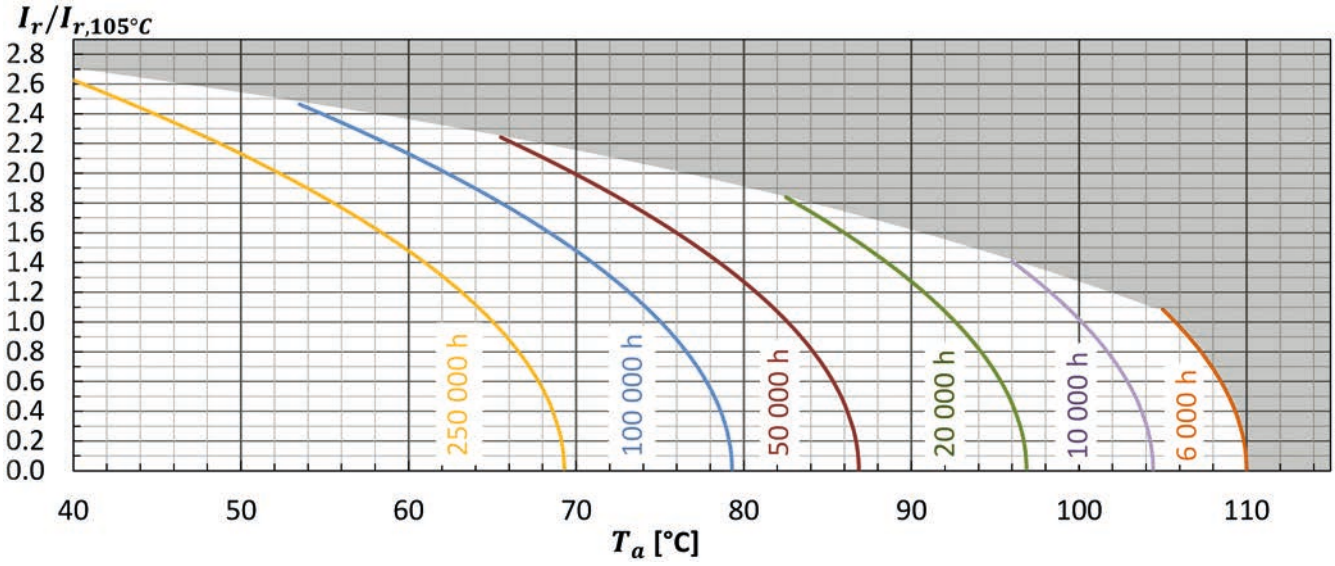

› Life Time Tests and Requirements · Anforderungen Brauchbarkeitsdauer

Life time test	Test procedure	End of Life criteria
Endurance test	T_a = 105°C; V_r, I_r applied 4000 hours	ΔC/C ≤ 15% (of initial value) Tanδ ≤ 175% (of specified value) I_L ≤ specified value
Useful life	T_a = 105°C; V_r, I_r applied 6000 hours	ΔC/C ≤ 20% (of initial value) Tanδ < 200% (of specified value) I_L ≤ specified value

Reference Specification: JIS C 5101-4, JIS C 5102, IEC 60384-4

HU · Snap-In · 6000h/105 °C

Standard Performances · Most Compact Design

> Specifications · Spezifikationen

Items	Characteristics
Temperature range	-40°C ~ + 105°C (200VDC - 250VDC) -25°C ~ + 105°C (400VDC - 550VDC)
Capacitance tolerance (at 20°C)	Standard +/- 20%, -10%/+30% on request
Surge voltage	Repetitive max. 30 sec per 6 Minutes
Leakage current max. I_L (20°C, 5 min)	0.02 • C • V_r [µA] or 3 mA, which is smaller.
Useful life	6000h at 105°C
Field failure rate	0.5 FIT = 0.5 • 10^{-9} Failures/hour
Reference standards	IEC 60384-4, JIS C 5101-4, AEC-Q200 qualified
Vibration	0.75mm, 10...55Hz, 10g, 3x2h
Sleeve withstanding voltage	3000 Vac/1 min between terminals bundled and plate*
Product Compliance	RoHS, REACH, Conflict Minerals a.o. - refer to p. 14–15

* Typical value using sleeve which is free from any scratches and damages

> Outline Drawings · Bauformen

Refer to page 9 for available terminal shapes and dimensions. · Auf Seite 9 finden Sie die verfügbaren Bauformen und Maße.

> Product Code · Bestellbezeichnung

Example: Series HU · 400 V · 330 µF ± 20 % · 30 x 30 mm · 2-pin terminal · without plate

HU	2G	331	M	R	Z	S3	WPEC

Type of series

Capacitance code

The first two digits are significant. The last digit indicates the number of following zeros in µF.

Terminal symbol code

- R: 2-claw 6.3 mm
- S: 4-claw 6.3 mm
- C: 2-claw short 4.0 mm
- X: 4-claw short 4.0 mm
- E: 3-claw short 4.0 mm
- T: 2-lugs 4.5 mm

Outer design code

None:
PET sleeve and PVC plate

WPEC:
PET sleeve without plate

Others on request

Rated voltage code

Code	Voltage
2D	200
2E	250
2V	350
2G	400
420V	420
2W	450
2H	500
2L	550

Capacitance tolerance

- M : ± 20%
- Q : -10% ~ +30%

Diameter code

Code	ØD
W	20
X	22
Y	25
Z	30
A	35
B	40
H	46
C	50

Length code

Code	L	Code	L
S1	20	S10	65
S2	25	S11	70
S3	30	S12	75
S4	35	S13	80
S5	40	S14	85
S6	45	S15	90
S7	50	S16	95
S8	55	S17	100
S9	60	S18	105

Rated VoltageCode (Surge Voltage) V_r [V DC]	Capacitance C_r [µF]	Ripple Current at 105°C/120Hz I_r [A RMS]	Ripple Current at 40°C/120Hz [A RMS]	ESR (typ) at 20°C/100Hz [mΩ]	Dissipation Factor at 20°C/100Hz Tan δ	DxL [mm]	Product Code # = variable value, see terminal code in the product code
200 VDC Code: 2D Surge Voltage 250 VDC	330	1.20	2.76	330	0.15	20x35	HU2D331M#WS4
		1.07	2.46	330	0.15	22x25	HU2D331M#XS2
	390	1.24	2.85	280	0.15	22x30	HU2D391M#XS3
	470	1.31	3.01	240	0.15	25x25	HU2D471M#YS2
	560	1.58	3.63	200	0.15	22x35	HU2D561M#XS4
		1.52	3.50	200	0.15	25x30	HU2D561M#YS3
	680	1.83	4.21	160	0.15	22x40	HU2D681M#XS5
		1.77	4.07	160	0.15	25x35	HU2D681M#YS4
		1.60	3.68	160	0.15	30x25	HU2D681M#ZS2
	820	2.10	4.83	140	0.15	22x45	HU2D821M#XS6
		2.20	5.06	140	0.15	22x50	HU2D821M#XS7
		2.05	4.72	140	0.15	25x40	HU2D821M#YS5
		1.86	4.28	140	0.15	30x30	HU2D821M#ZS3
		1.52	3.50	140	0.15	35x25	HU2D821M#AS2
	1 000	2.37	5.45	110	0.15	25x45	HU2D102M#YS6
		2.17	4.99	110	0.15	30x35	HU2D102M#ZS4
	1 200	2.70	6.21	100	0.15	25x50	HU2D122M#YS7
		2.49	5.73	100	0.15	30x40	HU2D122M#ZS5
		1.94	4.46	100	0.15	35x30	HU2D122M#AS3
	1 500	2.91	6.69	80	0.15	30x45	HU2D152M#ZS6
		2.29	5.27	80	0.15	35x35	HU2D152M#AS4
	1 800	3.32	7.64	70	0.15	30x50	HU2D182M#ZS7
		2.62	6.03	70	0.15	35x40	HU2D182M#AS5
	2 200	3.02	6.95	50	0.15	35x45	HU2D222M#AS6
	2 700	3.86	8.88	50	0.15	35x50	HU2D272M#AS7
250 VDC Code: 2E Surge Voltage 300 VDC	220	0.95	2.19	440	0.15	22x25	HU2E221M#XS2
	330	1.30	2.99	290	0.15	20x35	HU2E331M#WS4
		1.24	2.85	290	0.15	22x30	HU2E331M#XS3
		1.19	2.74	290	0.15	25x25	HU2E331M#YS2
	390	1.42	3.27	250	0.15	22x35	HU2E391M#XS4
		1.37	3.15	250	0.15	25x30	HU2E391M#YS3
	470	1.65	3.80	210	0.15	22x40	HU2E471M#XS5
		1.42	3.27	210	0.15	30x25	HU2E471M#ZS2
	560	1.88	4.32	180	0.15	22x45	HU2E561M#XS6
		1.74	4.00	180	0.15	25x35	HU2E561M#YS4
	680	2.16	4.97	150	0.15	22x50	HU2E681M#XS7
		2.01	4.62	150	0.15	25x40	HU2E681M#YS5
		2.11	4.85	150	0.15	25x45	HU2E681M#YS6
		1.82	4.19	150	0.15	30x30	HU2E681M#ZS3
		1.52	3.50	150	0.15	35x25	HU2E681M#AS2
	820	2.41	5.54	120	0.15	25x50	HU2E821M#YS7
		2.10	4.83	120	0.15	30x35	HU2E821M#ZS4
		1.76	4.05	120	0.15	35x30	HU2E821M#AS3
	1 000	2.43	5.59	100	0.15	30x40	HU2E102M#ZS5
		2.04	4.69	100	0.15	35x35	HU2E102M#AS4

Additional designs on request · Weitere Designs auf Anfrage

Rated VoltageCode (Surge Voltage) V_r [V DC]	Capacitance C_r [µF]	Ripple Current at 105°C/120Hz I_r [A RMS]	Ripple Current at 40°C/120Hz [A RMS]	ESR (typ) at 20°C/100Hz [mΩ]	Dissipation Factor at 20°C/100Hz Tan δ	DxL [mm]	Product Code # = variable value, see terminal code in the product code
250 VDC Code: 2E Surge Voltage 300 VDC	**1 200**	2.89	6.65	80	0.15	30x50	HU2E122M#ZS7
		2.34	5.38	80	0.15	35x40	HU2E122M#AS5
	1 500	2.73	6.28	70	0.15	35x45	HU2E152M#AS6
	1 800	3.11	7.15	60	0.15	35x50	HU2E182M#AS7
400 VDC Code: 2G Surge Voltage 450 VDC	**82**	0.63	1.45	1170	0.20	22x25	HU2G820M#XS2
	120	0.77	1.77	800	0.20	22x25	HU2G121M#XS2
	150	0.87	2.00	640	0.20	22x26	HU2G151M#XS2
		0.92	2.12	640	0.20	22x30	HU2G151M#XS3
	180	1.01	2.32	540	0.20	22x30	HU2G181M#XS3
		1.05	2.42	540	0.20	22x35	HU2G181M#XS4
		0.99	2.28	540	0.20	25x25	HU2G181M#YS2
	220	1.11	2.55	440	0.20	22x30	HU2G221M#XS3
		1.22	2.81	440	0.20	22x40	HU2G221M#XS5
		1.10	2.53	440	0.20	25x25	HU2G221M#YS2
		1.16	2.67	440	0.20	25x30	HU2G221M#YS3
	250	1.23	2.83	390	0.20	30x25	HU2G251M#ZS2
	270	1.29	2.97	360	0.20	22x35	HU2G271M#XS4
		1.40	3.22	360	0.20	22x45	HU2G271M#XS6
		1.28	3.46	360	0.20	25x30	HU2G271M#YS3
		1.35	3.11	360	0.20	25x35	HU2G271M#YS4
		1.28	2.94	360	0.20	30x25	HU2G271M#ZS2
	330	1.54	3.54	290	0.20	22x45	HU2G331M#XS6
		1.59	3.66	290	0.20	22x50	HU2G331M#XS7
		1.49	3.43	290	0.20	25x35	HU2G331M#YS4
		1.55	3.57	290	0.20	25x40	HU2G331M#YS5
		1.41	3.24	290	0.20	30x25	HU2G331M#ZS2
		1.49	3.43	290	0.20	30x30	HU2G331M#ZS3
		1.46	3.36	290	0.20	35x25	HU2G331M#AS2
	390	1.73	3.98	250	0.20	22x50	HU2G391M#XS7
		1.68	3.86	250	0.20	25x40	HU2G391M#YS5
		1.74	4.00	250	0.20	25x45	HU2G391M#YS6
		1.62	3.72	250	0.20	30x30	HU2G391M#ZS3
		1.70	3.91	250	0.20	30x35	HU2G391M#ZS4
		1.59	3.66	250	0.20	35x25	HU2G391M#AS2
		1.87	4.30	250	0.20	35x30	HU2G391M#AS3
	460	1.72	3.96	215	0.20	35x25	HU2G461M#AS2
	470	1.92	4.41	210	0.20	25x45	HU2G471M#YS6
		1.98	4.55	210	0.20	25x50	HU2G471M#YS7
		1.86	4.28	210	0.20	30x35	HU2G471M#ZS4
		1.94	4.46	210	0.20	30x40	HU2G471M#ZS5
		1.84	4.23	210	0.20	35x30	HU2G471M#AS3
	500	1.98	4.55	200	0.20	25x45	HU2G501M#YS6
		1.80	4.14	200	0.20	35x25	HU2G501M#AS2
	560	2.16	4.97	180	0.20	25x51	HU2G561M#YL51

Additional designs on request · Weitere Designs auf Anfrage

Rated VoltageCode (Surge Voltage) V_r [V DC]	Capacitance C_r [µF]	Ripple Current at 105°C/120Hz I_r [A RMS]	Ripple Current at 40°C/120Hz [A RMS]	ESR (typ) at 20°C/100Hz [mΩ]	Dissipation Factor at 20°C/100Hz Tan δ	DxL [mm]	Product Code # = variable value, see terminal code in the product code
400 VDC Code: 2G Surge Voltage 450 VDC	**560**	2.11	4.85	180	0.20	30x40	HU2G561M#ZS5
		2.19	5.04	180	0.20	30x45	HU2G561M#ZS6
		2.01	4.62	180	0.20	35x30	HU2G561M#AS3
		2.09	4.81	180	0.20	35x35	HU2G561M#AS4
	680	2.51	5.77	150	0.20	25x61	HU2G681M#YS9
		2.41	5.54	150	0.20	30x45	HU2G681M#ZS6
		2.48	5.70	150	0.20	30x50	HU2G681M#ZS7
		2.31	5.31	150	0.20	35x35	HU2G681M#AS4
		2.40	5.52	150	0.20	35x40	HU2G681M#AS5
	720	2.74	6.30	150	0.20	30x50	HU2G721M#ZS72PCC
	750	2.67	6.14	135	0.20	35x50	HU2G751M#AS7
	770	2.51	5.77	132	0.20	35x50	HU2G771M#AS7
	820	2.65	6.10	120	0.20	30x51	HU2G821M#ZS7
		2.81	6.46	120	0.20	30x55	HU2G821M#ZS8
		2.63	6.05	120	0.20	35x40	HU2G821M#AS5
		2.72	6.26	120	0.20	35x45	HU2G821M#AS6
		2.78	6.39	120	0.20	35x50	HU2G821M#AS7
	920	2.58	5.93	125	0.20	30x51	HU2G921M#ZS7
	950	4.00	9.20	75	0.20	35x55	HU2G951S#AS82PCC
		4.25	9.78	105	0.20	35x60	HU2G951M#AS92PCC
	1 000	3.17	7.29	100	0.20	30x61	HU2G102M#ZS9
		3.09	7.11	100	0.20	35x50	HU2G102M#AL51
		2.86	6.58	120	0.20	35x60	HU2G102M#AS9
	1 200	3.38	7.77	80	0.20	35x56	HU2G122M#AS8
		3.44	7.91	80	0.20	35x75	HU2G122M#AS12
	1 300	3.61	8.30	80	0.20	35x80	HU2G132M#AS13
	1 500	3.93	9.04	80	0.20	35x100	HU2G152M#AS17
		3.99	9.18	80	0.20	40x76	HU2G152M#BS12
	1 700	6.00	13.80	45	0.20	40x90	HU2G172Q#BS15CC
	1 800	4.47	10.28	60	0.20	40x101	HU2G182M#BS17
	2 100	5.43	12.49	50	0.20	40x101	HU2G212M#BS17CC
420 VDC Code: 420V Surge Voltage 470 VDC	**100**	0.71	1.63	1020	0.20	22x25	HU420V101M#XS2
	120	0.77	1.77	850	0.20	22x25	HU420V101M#XS2
	150	0.87	2.00	680	0.20	22x25	HU420V151M#XS2
		0.92	2.12	680	0.20	22x30	HU420V151M#XS3
		0.90	2.07	680	0.20	25x25	HU420V151M#YS2
	180	1.01	2.32	570	0.20	22x30	HU420V181M#XS3
		1.05	2.42	570	0.20	22x35	HU420V181M#XS4
		1.05	2.42	570	0.20	25x30	HU420V181M#YS3
	220	1.17	2.69	470	0.20	22x35	HU420V221M#XS4
		1.22	2.81	470	0.20	22x40	HU420V221M#XS5
		1.21	2.78	470	0.20	25x35	HU420V221M#YS4
		1.15	2.65	470	0.20	30x25	HU420V221M#ZS2
	270	1.35	3.11	380	0.20	22x40	HU420V271M#XS5

Additional designs on request · Weitere Designs auf Anfrage

Rated VoltageCode (Surge Voltage) V_r [V DC]	Capacitance C_r [µF]	Ripple Current at 105°C/120Hz I_r [A RMS]	Ripple Current at 40°C/120Hz [A RMS]	ESR (typ) at 20°C/100Hz [mΩ]	Dissipation Factor at 20°C/100Hz Tan δ	DxL [mm]	Product Code # = variable value, see terminal code in the product code
420 VDC Code: 420V Surge Voltage 470 VDC	**270**	1.40	3.22	380	0.20	22x45	HU420V271M#XS6
		1.35	3.11	380	0.20	25x35	HU420V271M#YS4
		1.28	2.94	380	0.20	30x25	HU420V271M#ZS2
		1.38	3.17	380	0.20	35x25	HU420V271M#AS2
	330	1.54	3.54	310	0.20	22x45	HU420V331M#XS6
		1.59	3.66	310	0.20	22x50	HU420V331M#XS7
		1.45	3.34	310	0.20	25x36	HU420V331M#YS4
		1.55	3.57	310	0.20	25x40	HU420V331M#YS5
		1.61	3.70	310	0.20	25x45	HU420V331M#YS6
		1.49	3.43	310	0.20	30x30	HU420V331M#ZS3
		1.56	3.59	310	0.20	30x35	HU420V331M#ZS4
		1.46	3.36	310	0.20	35x25	HU420V331M#AS2
	390	1.64	3.77	270	0.20	25x41	HU420V391M#YS5
		1.74	4.00	270	0.20	25x45	HU420V391M#YS6
		1.80	4.14	270	0.20	25x50	HU420V391M#YS7
		1.62	3.73	270	0.20	30x30	HU420V391M#ZS3
		1.70	3.91	270	0.20	30x35	HU420V391M#ZS4
		1.76	4.05	270	0.20	30x40	HU420V391M#ZS5
		1.59	3.66	270	0.20	35x25	HU420V391M#AS2
		1.67	3.84	270	0.20	35x30	HU420V391M#AS3
	470	1.98	4.55	220	0.20	25x50	HU420V471M#YS7
		1.86	4.28	220	0.20	30x35	HU420V471M#ZS4
		1.94	4.46	220	0.20	30x40	HU420V471M#ZS5
		2.00	4.60	220	0.20	30x45	HU420V471M#ZS6
		1.84	4.23	220	0.20	35x30	HU420V471M#AS3
		1.92	4.42	220	0.20	35x35	HU420V471M#AS4
	500	1.89	4.35	200	0.20	35x31	HU420V501M#AL31
	520	2.18	5.01	190	0.20	30x45	HU420V521M#ZS6
	560	2.16	4.97	190	0.20	25x56	HU420V561M#YS8
		2.27	5.22	190	0.20	25x60	HU420V561M#YS9
		2.11	4.85	190	0.20	30x40	HU420V561M#ZS5
		2.25	5.18	190	0.20	30x50	HU420V561M#ZS7
		2.09	4.81	190	0.20	35x35	HU420V561M#AS4
		2.18	5.01	190	0.20	35x40	HU420V561M#AS5
	680	2.48	5.70	150	0.20	30x45	HU420V681M#ZS6
		2.48	5.70	150	0.20	30x50	HU420V681M#ZS7
		2.40	5.52	150	0.20	35x40	HU420V681M#AS5
		2.48	5.70	150	0.20	35x45	HU420V681M#AS6
		2.56	5.89	150	0.20	35x50	HU420V681M#AS7
	720	2.55	5.86	140	0.20	35x45	HU420V721M#AS6
	820	2.81	6.46	130	0.20	30x55	HU420V821M#ZS8
		2.72	6.26	130	0.20	35x45	HU420V821M#AS6
		2.80	6.44	130	0.20	35x50	HU420V821M#AS7
	920	2.96	6.81	120	0.20	35x60	HU420V921M#AS9

Additional designs on request · Weitere Designs auf Anfrage

Rated VoltageCode (Surge Voltage) V_r [V DC]	Capacitance C_r [µF]	Ripple Current at 105°C/120Hz I_r [A RMS]	Ripple Current at 40°C/120Hz [A RMS]	ESR (typ) at 20°C/100Hz [mΩ]	Dissipation Factor at 20°C/100Hz Tan δ	DxL [mm]	Product Code # = variable value, see terminal code in the product code
420 VDC Code: 420V Surge Voltage 470 VDC	**1 000**	3.18	7.31	110	0.20	35x56	HU420V102M#AS8
		3.25	7.48	110	0.20	35x60	HU420V102M#AS9
		3.30	7.59	110	0.20	40x56	HU420V102M#BS8
	1 200	3.46	7.96	90	0.20	35x80	HU420V122M#AS13
		3.57	8.21	90	0.20	40x76	HU420V122M#BS12
	1 500	4.07	9.36	70	0.20	40x101	HU420V152M#BS17
	1 600	4.20	9.66	70	0.20	40x101	HU420V162M#BS17
	1 800	4.45	10.24	67	0.20	40x101	HU420V182M#BS17
		5.74	13.19	44	0.20	45x76	HU420V182M#HS12CC
450 VDC Code: 2W Surge Voltage 500 VDC	**68**	0.54	1.24	1500	0.20	22x20	HU2W680M#XS1
	82	0.62	1.43	1250	0.20	25x20	HU2W820M#YS1
	100	0.71	1.63	1020	0.20	20x30	HU2W101M#WS3
		0.71	1.63	1020	0.20	22x25	HU2W101M#XS2
		0.75	1.73	1020	0.20	22x30	HU2W101M#XS3
		0.72	1.66	1020	0.20	30x20	HU2W101M#ZS1
	120	0.77	1.77	850	0.20	22x26	HU2W121M#XS2
		0.82	1.89	850	0.20	22x30	HU2W121M#XS3
		0.81	1.86	850	0.20	25x25	HU2W121M#YS2
	150	0.92	2.12	680	0.20	22x30	HU2W151M#XS3
		0.96	2.21	680	0.20	22x35	HU2W151M#XS4
		0.90	2.07	680	0.20	25x25	HU2W151M#YS2
	180	1.01	2.32	570	0.20	22x30	HU2W181M#XS3
		1.05	2.42	570	0.20	22x35	HU2W181M#XS4
		1.09	2.51	570	0.20	22x40	HU2W181M#XS5
		0.99	2.28	570	0.20	25x25	HU2W181M#YS2
		1.05	2.42	570	0.20	25x30	HU2W181M#YS3
		1.09	2.51	570	0.20	25x35	HU2W181M#YS4
		1.04	2.39	570	0.20	30x25	HU2W181M#ZS2
	220	0.96	2.21	470	0.20	22x30	HU2W221M#XS3
		1.17	2.69	470	0.20	22x35	HU2W221M#XS4
		1.22	2.81	470	0.20	22x40	HU2W221M#XS5
		1.25	2.88	470	0.20	22x45	HU2W221M#XS6
		1.16	2.67	470	0.20	25x30	HU2W221M#YS3
		1.21	2.78	470	0.20	25x35	HU2W221M#YS4
		1.26	2.90	470	0.20	25x40	HU2W221M#YS5
		1.15	2.65	470	0.20	30x25	HU2W221M#ZS2
	270	1.11	2.55	380	0.20	22x35	HU2W271M#XS4
		1.31	3.01	380	0.20	22x41	HU2W271M#XS5
		1.40	3.22	380	0.20	22x45	HU2W271M#XS6
		1.44	3.31	380	0.20	22x50	HU2W271M#XS7
		1.11	2.55	380	0.20	25x30	HU2W271M#YS3
		1.35	3.11	380	0.20	25x35	HU2W271M#YS4
		1.40	3.22	380	0.20	25x40	HU2W271M#YS5
		1.28	2.94	380	0.20	30x25	HU2W271M#ZS2

Additional designs on request · Weitere Designs auf Anfrage

Rated VoltageCode (Surge Voltage) V_r [V DC]	Capacitance C_r [µF]	Ripple Current at 105°C/120Hz I_r [A RMS]	Ripple Current at 40°C/120Hz [A RMS]	ESR (typ) at 20°C/100Hz [mΩ]	Dissipation Factor at 20°C/100Hz Tan δ	DxL [mm]	Product Code # = variable value, see terminal code in the product code
450 VDC Code: 2W Surge Voltage 500 VDC	270	1.35	3.11	380	0.20	30x30	HU2W271M#ZS3
		1.38	3.17	380	0.20	35x25	HU2W271M#AS2
	330	1.28	2.94	310	0.20	22x40	HU2W331M#XS5
		1.33	3.06	310	0.20	22x45	HU2W331M#XS6
		1.59	3.66	310	0.20	22x50	HU2W331M#XS7
		1.49	3.43	310	0.20	25x35	HU2W331M#YS4
		1.55	3.57	310	0.20	25x40	HU2W331M#YS5
		1.61	3.70	310	0.20	25x45	HU2W331M#YS6
		1.65	3.80	310	0.20	25x50	HU2W331M#YS7
		1.49	3.43	310	0.20	30x30	HU2W331M#ZS3
		1.56	3.59	310	0.20	30x35	HU2W331M#ZS4
		1.46	3.36	310	0.20	35x25	HU2W331M#AS2
	370	1.41	3.22	355	0.20	30x30	HU2W371M#ZS3
	390	1.49	3.43	270	0.20	22x50	HU2W391M#XS7
		1.45	3.34	270	0.20	25x40	HU2W391M#YS5
		1.74	4.00	270	0.20	25x45	HU2W391M#YS6
		1.80	4.14	270	0.20	25x50	HU2W391M#YS7
		1.40	3.22	270	0.20	30x30	HU2W391M#ZS3
		1.70	3.91	270	0.20	30x35	HU2W391M#ZS4
		1.76	4.05	270	0.20	30x40	HU2W391M#ZS5
		1.67	3.84	270	0.20	35x30	HU2W391M#AS3
	410	1.48	3.39	220	0.20	30x30	HU2W411M#ZS3
	470	1.65	3.80	220	0.20	25x45	HU2W471M#YS6
		1.92	4.42	220	0.20	25x50	HU2W471M#YS7
		2.04	4.69	220	0.20	25x55	HU2W471M#YS8
		2.29	5.27	220	0.20	25x60	HU2W471M#YS9
		1.61	3.70	220	0.20	30x35	HU2W471M#ZS4
		1.94	4.46	220	0.20	30x40	HU2W471M#ZS5
		2.00	4.60	220	0.20	30x45	HU2W471M#ZS6
		2.08	4.78	220	0.20	30x50	HU2W471M#ZS7
		1.84	4.23	220	0.20	35x30	HU2W471M#AS3
		1.92	4.42	220	0.20	35x35	HU2W471M#AS4
		1.99	4.58	220	0.20	35x40	HU2W471M#AS5
	560	1.86	4.28	190	0.20	25x50	HU2W561M#YS7
		1.91	4.39	190	0.20	25x55	HU2W561M#YS8
		2.27	5.22	190	0.20	25x60	HU2W561M#YS9
		1.75	4.03	190	0.20	30x35	HU2W561M#ZS4
		1.82	4.19	190	0.20	30x40	HU2W561M#ZS5
		2.19	5.04	190	0.20	30x46	HU2W561M#ZS6
		2.25	5.18	190	0.20	30x50	HU2W561M#ZS7
		1.73	3.98	190	0.20	35x30	HU2W561M#AS3
		2.09	4.81	190	0.20	35x35	HU2W561M#AS4
		2.18	5.01	190	0.20	35x40	HU2W561M#AS5
		2.26	5.20	190	0.20	35x45	HU2W561M#AS6

Additional designs on request · Weitere Designs auf Anfrage

Rated VoltageCode (Surge Voltage) V_r [V DC]	Capacitance C_r [µF]	Ripple Current at 105°C/120Hz I_r [A RMS]	Ripple Current at 40°C/120Hz [A RMS]	ESR (typ) at 20°C/100Hz [mΩ]	Dissipation Factor at 20°C/100Hz Tan δ	DxL [mm]	Product Code # = variable value, see terminal code in the product code
450 VDC Code: 2W Surge Voltage 500 VDC	**590**	2.14	4.90	180	0.20	35x33	HU2W591M#AS3
	610	2.18	5.00	175	0.20	35x34	HU2W611M#AL34
	680	2.16	4.97	150	0.20	25x60	HU2W681M#YS9
		2.48	5.70	150	0.20	25x70	HU2W681M#YS11
		2.08	4.78	150	0.20	30x45	HU2W681M#ZS6
		2.48	5.70	150	0.20	30x50	HU2W681M#ZS7
		2.48	5.70	150	0.20	30x51	HU2W681M#ZS7
		2.56	5.89	150	0.20	30x55	HU2W681M#ZS8
		2.61	6.00	150	0.20	30x60	HU2W681M#ZS9
		2.30	5.29	150	0.20	35x36	HU2W681M#AS4
		2.40	5.52	150	0.20	35x41	HU2W681M#AS5
		2.48	5.70	150	0.20	35x45	HU2W681M#AS6
		2.55	5.87	150	0.20	35x50	HU2W681M#AS7
		3.59	8.26	105	0.20	35x75	HU2W681M#AS122PCC
	740	2.31	5.31	160	0.20	30x50	HU2W741M#ZS7
	810	2.42	5.56	165	0.20	30x50	HU2W811M#ZS7
	820	2.75	6.33	130	0.20	25x80	HU2W821M#YS13
		2.35	5.41	130	0.20	30x50	HU2W821M#ZS7
		2.42	5.57	130	0.20	30x55	HU2W821M#ZS8
		2.87	6.60	130	0.20	30x60	HU2W821M#ZS9
		2.35	5.41	150	0.20	35x40	HU2W821M#AS5
		2.64	6.07	130	0.20	35x45	HU2W821M#AS6
		2.64	6.07	130	0.20	35x46	HU2W821M#AS6
		2.80	6.44	130	0.20	35x50	HU2W821M#AS7
	850	2.93	6.74	125	0.20	35x55	HU2W851M#AS8
		3.18	7.31	115	0.20	35x60	HU2W851M#AS9
	910	2.70	6.21	150	0.20	30x60	HU2W911M#ZS9
	950	3.70	8.51	115	0.20	35x60	HU2W951M#AS92P
	1 000	2.73	6.28	135	0.20	30x60	HU2W102M#ZS9
		2.83	6.50	135	0.20	30x60	HU2W102M#ZS9
		2.59	5.96	110	0.20	35x45	HU2W102M#AS6
		2.67	6.14	110	0.20	35x50	HU2W102M#AS7
		3.18	7.31	110	0.20	35x55	HU2W102M#AS8
		3.25	7.48	110	0.20	35x60	HU2W102M#AS9
		3.15	7.25	110	0.20	35x70	HU2W102M#AS11
		4.00	9.20	90	0.20	35x75	HU2W102M#AS122PCC
	1 100	2.87	6.60	90	0.20	30x60	HU2W112M#ZS9
	1 200	4.01	9.22	90	0.20	35x82	HU2W122M#AS13CC
		3.51	8.05	90	0.20	35x100	HU2W122M#AS17
		3.57	8.21	90	0.20	40x75	HU2W122M#BS12
		4.01	9.22	90	0.20	40x90	HU2W122M#BS15
	1 300	3.18	7.31	85	0.20	30x70	HU2W132M#ZS11
		3.78	8.69	85	0.20	35x70	HU2W132M#AS11
	1 500	3.51	8.07	70	0.20	30x95	HU2W152M#ZS16

Additional designs on request · Weitere Designs auf Anfrage

Rated VoltageCode (Surge Voltage) V_r [V DC]	Capacitance C_r [µF]	Ripple Current at 105°C/120Hz I_r [A RMS]	Ripple Current at 40°C/120Hz [A RMS]	ESR (typ) at 20°C/100Hz [mΩ]	Dissipation Factor at 20°C/100Hz Tan δ	DxL [mm]	Product Code # = variable value, see terminal code in the product code
450 VDC Code: 2W Surge Voltage 500 VDC	**1 500**	3.52	8.10	70	0.20	35x75	HU2W152M#AS12
		4.29	9.87	70	0.20	35x90	HU2W152M#AS15CC
		4.02	9.25	70	0.20	40x81	HU2W152M#BS13
		4.07	9.36	70	0.20	40x101	HU2W152M#BS17
		4.00	9.20	70	0.20	46x97	HU2W152M#HL97
	1 600	3.63	8.35	60	0.20	30x100	HU2W162M#ZS17
	1 800	3.92	9.02	55	0.20	35x85	HU2W182M#AS14
		5.35	12.31	55	0.20	45x95	HU2W182M#HS16CCR
	2 100	4.25	9.78	85	0.20	35x100	HU2W212M#AS17
	2 200	5.33	12.26	50	0.20	46x100	HU2W222M#HS17
500 VDC Code: 2H Surge Voltage 550 VDC	**56**	0.42	0.97	1710	0.20	22x25	HU2H560M#XS2
	68	0.45	1.04	1410	0.20	22x25	HU2H680M#XS2
		0.48	1.10	1410	0.20	22x30	HU2H680M#XS3
		0.55	1.27	1410	0.20	25x25	HU2H680M#YS2
	82	0.50	1.15	1170	0.20	22x26	HU2H820M#XS2
		0.53	1.22	1170	0.20	22x30	HU2H820M#XS3
		0.54	1.24	1170	0.20	25x25	HU2H820M#YS2
		0.57	1.31	1170	0.20	25x30	HU2H820M#YS3
	100	0.59	1.36	960	0.20	22x30	HU2H101M#XS3
		0.62	1.43	960	0.20	22x35	HU2H101M#XS4
		0.65	1.50	960	0.20	22x40	HU2H101M#XS5
		0.61	1.40	960	0.20	25x25	HU2H101M#YS3
		0.64	1.47	960	0.20	25x30	HU2H101M#YS4
		0.63	1.45	960	0.20	30x25	HU2H101M#ZS3
	120	0.69	1.59	800	0.20	22x35	HU2H121M#XS4
		0.72	1.66	800	0.20	22x40	HU2H121M#XS5
		0.71	1.63	800	0.20	25x30	HU2H121M#YS3
		0.74	1.70	800	0.20	25x35	HU2H121M#YS4
		0.75	1.73	800	0.20	30x25	HU2H121M#ZS2
	150	0.82	1.89	640	0.20	22x40	HU2H151M#XS5
		0.85	1.96	640	0.20	22x45	HU2H151M#XS6
		0.84	1.93	640	0.20	25x35	HU2H151M#YS4
		0.88	2.02	640	0.20	25x40	HU2H151M#YS6
		0.85	1.96	640	0.20	30x25	HU2H151M#ZS2
		0.90	2.07	640	0.20	30x30	HU2H151M#ZS3
		0.94	2.16	640	0.20	35x25	HU2H151M#AS2
	180	0.94	2.16	540	0.20	22x46	HU2H181M#XS6
		0.97	2.23	540	0.20	22x50	HU2H181M#XS7
		0.94	2.16	540	0.20	25x36	HU2H181M#YS4
		0.98	2.25	540	0.20	25x40	HU2H181M#YS5
		1.01	2.32	540	0.20	25x45	HU2H181M#YS6
		0.99	2.28	540	0.20	30x30	HU2H181M#ZS3
		1.04	2.39	540	0.20	30x35	HU2H181M#ZS4
		1.04	2.39	540	0.20	35x25	HU2H181M#AS2

Additional designs on request · Weitere Designs auf Anfrage

Rated VoltageCode (Surge Voltage) V_r [V DC]	Capacitance C_r [µF]	Ripple Current at 105°C/120Hz I_r [A RMS]	Ripple Current at 40°C/120Hz [A RMS]	ESR (typ) at 20°C/100Hz [mΩ]	Dissipation Factor at 20°C/100Hz Tan δ	DxL [mm]	Product Code # = variable value, see terminal code in the product code
500 VDC Code: 2H Surge Voltage 550 VDC	220	1.13	2.60	440	0.20	25x45	HU2H221M#YS6
		1.17	2.69	440	0.20	25x50	HU2H221M#YS7
		1.11	2.55	440	0.20	30x31	HU2H221M#ZS3
		1.17	2.69	440	0.20	30x35	HU2H221M#ZS4
		1.21	2.78	440	0.20	30x40	HU2H221M#ZS5
	270	1.16	2.67	440	0.20	35x26	HU2H221M#AS2
		1.22	2.81	440	0.20	35x30	HU2H221M#AS3
		1.31	3.01	360	0.20	25x51	HU2H271M#YS7
		1.31	3.01	360	0.20	30x36	HU2H271M#ZS4
		1.36	3.13	360	0.20	30x40	HU2H271M#ZS5
		1.41	3.24	360	0.20	30x45	HU2H271M#ZS6
		1.37	3.15	360	0.20	35x30	HU2H271M#AS3
		1.44	3.31	360	0.20	35x35	HU2H271M#AS4
	300	1.44	3.31	320	0.20	35x30	HU2H301M#AS3
	330	1.58	3.63	290	0.20	30x45	HU2H331M#ZS6
		1.63	3.75	290	0.20	30x50	HU2H331M#ZS7
		1.82	4.19	230	0.20	30x50	HU2H331M#ZS72P
		1.51	3.47	290	0.20	35x30	HU2H331M#AS3
		1.61	3.70	290	0.20	35x35	HU2H331M#AS5
		1.67	3.84	290	0.20	35x40	HU2H331M#AS5
	390	1.79	4.12	250	0.20	30x50	HU2H391M#ZS7
		1.84	4.23	250	0.20	35x40	HU2H391M#AS5
		1.90	4.37	250	0.20	35x45	HU2H391M#AS6
	470	2.10	4.83	210	0.20	30x60	HU2H471M#ZS9
		2.12	4.88	210	0.20	35x45	HU2H471M#AS6
		2.18	5.01	210	0.20	35x50	HU2H471M#AS7
	560	2.40	5.52	180	0.20	35x51	HU2H561M#AS7
		2.47	5.68	180	0.20	35x55	HU2H561M#AS8
		2.53	5.82	180	0.20	35x60	HU2H561M#AS9
	680	2.40	5.52	150	0.20	35x60	HU2H681M#AS9
	820	2.53	5.82	125	0.20	35x75	HU2H821M#AS12
550 VDC Code: 2L Surge Voltage 600 VDC	82	0.59	1.18	2920	0.25	30x25	HU2L820M#ZS2
	120	0.77	1.54	1990	0.25	30x30	HU2L121M#ZS3
		0.80	1.60	1990	0.25	35x25	HU2L121M#AS2
	150	0.91	1.82	1600	0.25	30x35	HU2L151M#ZS4
		0.96	1.92	1600	0.25	35x30	HU2L151M#AS3
	180	1.05	2.10	1330	0.25	30x40	HU2L181M#ZS5
		1.11	2.22	1330	0.25	35x35	HU2L181M#AS4
	220	1.26	2.52	1090	0.25	30x50	HU2L221M#ZS7
		1.29	2.58	1090	0.25	35x40	HU2L221M#AS5
	270	1.50	3.00	890	0.25	35x45	HU2L271M#AS6
	330	1.73	3.46	730	0.25	35x50	HU2L331M#AS7
	390	2.00	4.00	620	0.25	35x60	HU2L391M#AS9

Additional designs on request · Weitere Designs auf Anfrage

› Ripple Current Multiplier · Wechselstrommultiplikator

Frequency [Hz]	50/60	120	300	1k	≥ 10k
Multiplier	0.70	1.00	1.18	1.34	1.45

Temperature [°C]		40	45	50	55	60	65	70	75	80	85	90	95	100	105
Multiplier	200~500V	2.3	2.2	2.1	2.0	2.0	1.9	1.8	1.6	1.5	1.4	1.3	1.2	1.1	1.0
	550V	2.0	1.9	1.8	1.7	1.7	1.6	1.5	1.4	1.4	1.3	1.2	1.1	1.0	1.0

Forced cooling – Wind speed [m/sec]	v < 0.25	v ≥ 0.25	v ≥ 0.5	v ≥ 1.0	v ≥ 2.0	v ≥ 3.0
Multiplier	1.00	1.05	1.10	1.15	1.20	1.25

› Life Time Table · Brauchbarkeitsdauer – Tabelle

HU	Useful life as function of ambient temperature and ripple current													
I_r at 105°C	x 1.0	x 1.1	x 1.2	x 1.3	x 1.4	x 1.5	x 1.6	x 1.7	x 1.8	x 1.9	x 2.0	x 2.1	x 2.2	x 2.3
T_a = 40°C	250	250	250	250	250	250	250	250	250	250	250	250	250	250
T_a = 45°C	250	250	250	250	250	250	250	250	250	250	250	250	250	
T_a = 50°C	250	250	250	250	250	250	250	250	250	250	250	238		
T_a = 55°C	250	250	250	250	250	250	250	250	243	209	178			
T_a = 60°C	250	250	250	250	250	231	203	177	154	132	113			
T_a = 65°C	245	225	204	184	165	146	128	112	97	84				
T_a = 70°C	155	142	129	116	104	92	81	71	62					
T_a = 75°C	98	90	81	73	66	58	51							
T_a = 80°C	62	56	51	46	41	37								
T_a = 85°C	39	36	32	29	26									
T_a = 90°C	24	22	20	19										
T_a = 95°C	15	14	13											
T_a = 100°C	9	9												
T_a = 105°C	6		khrs	Max. value limited to 250 000 hours.										

› Life Time Graph · Brauchbarkeitsdauer – Diagramm

Useful life depending on ambient temperature T_a and ripple current operating conditions I_r versus rated ripple current at the upper category temperature $I_{r,\ 105°C,120Hz}$

Brauchbarkeitsdauer in Abhängigkeit von Umgebungstemperatur T_a und Wechselstrombelastung I_r im Verhältnis zur max. Wechselstrombelastung bei oberer Kategorietemperatur $I_{r,\ 105°C,120Hz}$

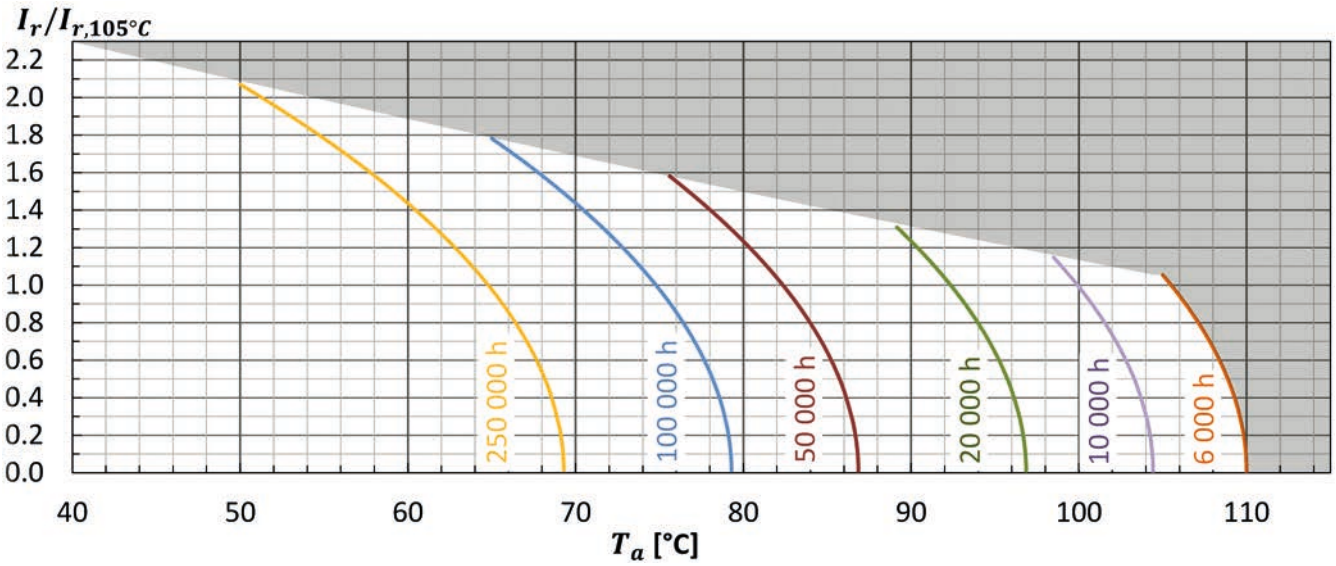

> Life Time Tests and Requirements · Anforderungen Brauchbarkeitsdauer

Life time test	Test procedure	End of Life criteria
Endurance test	T_a = 105°C; V_r, I_r applied 4000 hours	ΔC/C ≤ 20% (of initial value) Tanδ ≤ 200% (of specified value) I_L ≤ specified value
Useful life	T_a = 105°C; V_r, I_r applied 6000 hours	ΔC/C ≤ 30% (of initial value) Tanδ < 300% (of specified value) I_L ≤ specified value

Reference Specification: JIS C 5101-4, JIS C 5102, IEC 60384-4

HUC · Snap-In · 5000 h/105 °C

Standard Performances · Most Compact Design

› Specifications · Spezifikationen

Items	Characteristics
Temperature range	-25°C ~ + 105°C
Capacitance tolerance (at 20°C)	Standard +/- 20%, -10%/+30% on request
Surge voltage	max. 30 sec per 6 Minutes, 1.000 times
Leakage current max. I_L (20°C, 5 min)	0.02 • C • V_r [µA] or 3 mA, which is smaller.
Useful life	5000 hours at 105°C
Field failure rate	0.5 FIT = 0.5 • 10^{-9} Failures/hour
Reference standards	IEC 60384-4, JIS C 5101-4
Vibration	0.75mm, 10...55Hz, 10g, 3x2h
Sleeve withstanding voltage	3000 Vac/1 min between terminals bundled and plate*
Product Compliance	RoHS, REACH, Conflict Minerals a.o. - refer to p. 14–15

* Typical value using sleeve which is free from any scratches and damages

› Outline Drawings · Bauformen

Refer to page 9 for available terminal shapes and dimensions. · Auf Seite 9 finden Sie die verfügbaren Bauformen und Maße.

› Product Code · Bestellbezeichnung

Example: Series HUC · 450 V · 1500 µF ± 20 % · 35 x 65 mm · 2-pin short · without plate

HUC 2W 152 M C A S10 WPEC

Type of series

Capacitance code

The first two digits are significant. The last digit indicates the number of following zeros in µF.

Terminal symbol code

R: 2-claw 6.3 mm
S: 4-claw 6.3 mm
C: 2-claw short 4.0 mm
X: 4-claw short 4.0 mm
E: 3-claw short 4.0 mm
T: 2-lugs 4.5 mm

Diameter code

Code	ØD
X	20
Y	25
Z	30
A	35

Outer design code

None: PET sleeve and PVC plate
WPEC: PET sleeve without plate

Rated voltage code

Code	Voltage
2W	450

Capacitance tolerance

M : ± 20%
Q : -10% ~ +30%

Length Code

Code	L	Code	L
S7	50	S11	70
S8	55	S12	75
S9	60	S13	80
S10	65		

Rated VoltageCode (Surge Voltage) V_r [V DC]	Capacitance C_r [µF]	Ripple Current at 105°C/120Hz I_r [A RMS]	Ripple Current at 40°C/120Hz [A RMS]	ESR (typ) at 20°C/100Hz [mΩ]	Dissipation Factor at 20°C/100Hz Tan δ	DxL [mm]	Product Code # = variable value, see terminal code in the product code
450 VDC Code: 2W Surge Voltage 500 VDC	**450**	1.43	3.15	544	0.3	22x50	HUC2W451M#XS7
	500	1.55	3.41	490	0.3	22x55	HUC2W501M#XS8
	550	1.67	3.68	445	0.3	22x60	HUC2W551M#XS9
	590	1.70	3.74	415	0.3	25x50	HUC2W591M#YS7
	670	1.87	4.12	365	0.3	25x55	HUC2W671M#YS8
	740	2.01	4.43	331	0.3	25x60	HUC2W741M#YS9
	890	2.19	4.82	275	0.3	30x50	HUC2W891M#ZS7
	990	2.37	5.22	247	0.3	30x55	HUC2W991M#ZS8
	1 100	2.56	5.64	223	0.3	30x60	HUC2W112M#ZS9
	1 170	2.57	5.66	209	0.3	35x50	HUC2W1170UFM#AS7
	1 180	2.68	5.90	207	0.3	30x65	HUC2W1180UFM#ZS10
	1 310	2.80	6.16	187	0.3	35x55	HUC2W1310UFM#AS8
	1 320	2.86	6.30	185	0.3	30x70	HUC2W1320UFM#ZS11
	1 360	2.92	6.43	180	0.3	30x75	HUC2W1360UFM#ZS12
	1 440	3.03	6.67	170	0.3	30x80	HUC2W1440UFM#ZS13
	1 450	3.01	6.63	169	0.3	35x60	HUC2W1450UFM#AS9
	1 500	3.09	6.80	163	0.3	35x65	HUC2W152M#AS10
	1 620	3.24	7.13	151	0.3	35x70	HUC2W1620UFM#AS11
	1 720	3.36	7.40	142	0.3	35x75	HUC2W1720UFM#AS12
	1 840	3.50	7.70	133	0.3	35x80	HUC2W1840UFM#AS13

Additional designs on request · Weitere Designs auf Anfrage

› Ripple Current Multiplier · Wechselstrommultiplikator

Frequency [Hz]	50/60	120	300	1k	≥ 10k
Multiplier	0.70	1.00	1.10	1.15	1.40

Ta (°C)	40	45	50	55	60	65	70	75	80	85	90	95	100	105
Multiplier	2.2	2.2	2.1	2.0	1.9	1.8	1.7	1.6	1.5	1.4	1.3	1.2	1.1	1.0

Forced cooling – Wind speed [m/sec]	v < 0.25	v ≥ 0.25	v ≥ 0.5	v ≥ 1.0	v ≥ 2.0	v ≥ 3.0
Multiplier	1.00	1.05	1.10	1.15	1.20	1.25

› Life Time Table · Brauchbarkeitsdauer – Tabelle

HUC	Ripple Current Multiplier												
T_a	1.0	1.1	1.2	1.3	1.4	1.5	1.6	1.7	1.8	1.9	2.0	2.1	2.2
40 °C	250	250	250	250	250	250	250	250	250	250	250	250	250
45 °C	250	250	250	250	250	250	250	250	250	250	250	250	240
50 °C	250	250	250	250	250	250	250	250	250	250	218	183	
55 °C	250	250	250	250	250	250	250	222	191	163	138		
60 °C	250	250	250	236	210	185	162	141	121	103			
65 °C	201	183	166	149	133	117	103	89	77				
70 °C	127	116	105	94	84	74	65	56					
75 °C	80	73	66	60	53	47	41						
80 °C	51	46	42	38	34	30							
85 °C	32	29	27	24	21								
90 °C	20	19	17	15									
95 °C	13	12	11										
100 °C	8	7											
105 °C	5												

khrs Max. value limited to 250 000 hours.

› Life Time Graph · Brauchbarkeitsdauer – Diagramm

Useful life depending on ambient temperature T_a and ripple current operating conditions I_r versus rated ripple current at the upper category temperature $I_{r,\,105°C,120Hz}$

Brauchbarkeitsdauer in Abhängigkeit von Umgebungstemperatur T_a und Wechselstrombelastung I_r im Verhältnis zur max. Wechselstrombelastung bei oberer Kategorietemperatur $I_{r,\,105°C,120Hz}$

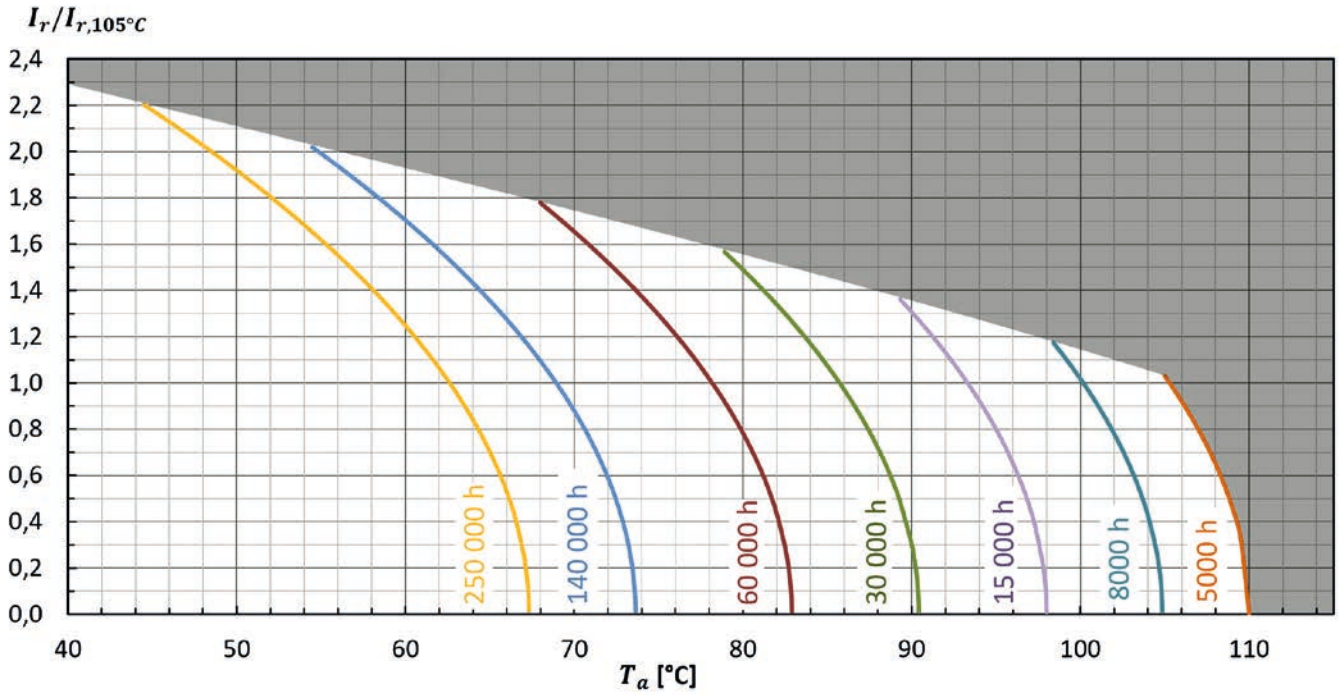

> Life Time Tests and Requirements · Anforderungen Brauchbarkeitsdauer

Life time test	Test procedure	End of Life criteria
Endurance test	T_a = 105°C; V_r, I_r applied 4000 hours	ΔC/C ≤ 20% (of initial value) Tanδ ≤ 200% (of specified value) I_L ≤ specified value
Useful life	T_a = 105°C; V_r, I_r applied 5000 hours	ΔC/C ≤ 30% (of initial value) Tanδ < 300% (of specified value) I_L ≤ specified value

Reference Specification: JIS C 5101-4, JIS C 5102, IEC 60384-4

HL · Snap-In · 12000 h / 105 °C

Compact Design · Long Life

> Specifications · Spezifikationen

Items	Characteristics
Temperature range	-40°C ~ + 105°C (200VDC - 250VDC) -25°C ~ + 105°C (315VDC - 500VDC)
Capacitance tolerance (at 20°C)	Standard +/- 20%, -10%/+30% on request
Surge voltage	Repetitive max. 30 sec per 6 Minutes
Leakage current max. I_L (20°C, 5 min)	0.02 • C • V_r [µA] or 3 mA, which is smaller.
Useful life	12 000 hours at 105°C
Field failure rate	0.5 FIT = 0.5 • 10^{-9} Failures/hour
Reference standards	IEC 60384-4, JIS C 5101-4, AEC-Q200 qualified
Vibration	0.75mm, 10...55Hz, 10g, 3x2h
Sleeve withstanding voltage	3000 Vac/1 min between terminals bundled and plate*
Product Compliance	RoHS, REACH, Conflict Minerals a.o. - refer to p. 14–15

* Typical value using sleeve which is free from any scratches and damages

> Outline Drawings · Bauformen

Refer to page 9 for available terminal shapes and dimensions. · Auf Seite 9 finden Sie die verfügbaren Bauformen und Maße.

> Product Code · Bestellbezeichnung

Example: Series HL · 500 V · 470 µF ±20 % · 35 x 60 mm · 2-pin short · without plate

HL **2H** **471** **M** **C** **A** **S9** **WPEC**

Type of series

Capacitance code

The first two digits are significant. The last digit indicates the number of following zeros in µF.

Terminal symbol code

- R: 2-claw 6.3 mm
- S: 4-claw 6.3 mm
- C: 2-claw short 4.0 mm
- X: 4-claw short 4.0 mm
- E: 3-claw short 4.0 mm
- T: 2-lugs 4.5 mm

Outer design code

None:
PET sleeve and PVC plate

WPEC:
PET sleeve without plate

Others on request

Rated voltage code

Code	Voltage
2D	200
2E	250
2F	315
2G	400
420V	420
2W	450
2H	500

Capacitance tolerance

- M : ± 20%
- Q : -10% ~ +30%

Diameter code

Code	ØD
X	22
Y	25
Z	30
A	35
B	40

Length code

Code	L	Code	L
S2	25	S7	50
S3	30	S8	55
S4	35	S9	60
S5	40	S13	80
S6	45	S17	100

Rated VoltageCode (Surge Voltage) V_r [V DC]	Capacitance C_r [µF]	Ripple Current at 105°C/120Hz I_r [A RMS]	Ripple Current at 40°C/120Hz [A RMS]	ESR (typ) at 20°C/100Hz [mΩ]	Dissipation Factor at 20°C/100Hz Tan δ	DxL [mm]	Product Code # = variable value, see terminal code in the product code
200 VDC Code: 2D Surge Voltage 250 VDC	**330**	1.09	2.51	330	0.15	22x25	HL2D331M#XS2
	470	1.37	3.15	240	0.15	22x30	HL2D471M#XS3
		1.36	3.13	240	0.15	25x25	HL2D471M#YS2
	560	1.57	3.61	200	0.15	22x35	HL2D561M#XS4
		1.57	3.61	200	0.15	25x30	HL2D561M#YS3
	680	1.81	4.16	160	0.15	22x40	HL2D681M#XS5
		1.75	4.03	160	0.15	30x25	HL2D681M#ZS2
	820	2.06	4.74	140	0.15	22x45	HL2D821M#XS6
		1.99	4.58	140	0.15	25x35	HL2D821M#YS4
	1000	2.37	5.45	110	0.15	25x45	HL2D102M#YS6
		2.24	5.15	110	0.15	30x30	HL2D102M#ZS3
		1.94	4.46	110	0.15	35x25	HL2D102M#AS2
	1200	2.67	6.14	100	0.15	25x50	HL2D122M#YS7
		2.56	5.89	100	0.15	30x35	HL2D122M#ZS4
		2.23	5.13	100	0.15	35x30	HL2D122M#AS3
	1500	3.08	7.08	80	0.15	30x45	HL2D152M#ZS6
		2.61	6.00	80	0.15	35x35	HL2D152M#AS4
	1800	3.49	8.03	70	0.15	30x50	HL2D182M#ZS7
		2.97	6.83	70	0.15	35x40	HL2D182M#AS5
	2200	3.39	7.80	50	0.15	35x45	HL2D222M#AS6
	2700	3.86	8.88	50	0.15	35x50	HL2D272M#AS7
250 VDC Code: 2E Surge Voltage 300 VDC	**270**	0.98	2.25	360	0.15	22x25	HL2E271M#XS2
	330	1.15	2.65	290	0.15	22x30	HL2E331M#XS3
		1.14	2.62	290	0.15	25x25	HL2E331M#YS2
	390	1.31	3.01	250	0.15	22x35	HL2E391M#XS4
	470	1.50	3.45	210	0.15	22x40	HL2E471M#XS5
		1.43	3.29	210	0.15	25x30	HL2E471M#YS3
		1.45	3.34	210	0.15	30x25	HL2E471M#ZS2
	560	1.70	3.91	180	0.15	22x45	HL2E561M#XS6
		1.64	3.77	180	0.15	25x35	HL2E561M#YS4
	680	1.94	4.46	150	0.15	22x50	HL2E681M#XS7
		1.88	4.32	150	0.15	25x40	HL2E681M#YS5
		1.85	4.26	150	0.15	30x30	HL2E681M#ZS3
		1.60	3.68	150	0.15	35x25	HL2E681M#AS2
	820	2.14	4.92	120	0.15	25x45	HL2E821M#YS6
		2.12	4.88	120	0.15	30x35	HL2E821M#ZS4
		1.84	4.23	120	0.15	35x30	HL2E821M#AS3
	1000	2.44	5.61	100	0.15	30x40	HL2E102M#ZS5
	1200	2.76	6.35	80	0.15	30x45	HL2E122M#ZS6
		2.33	5.36	80	0.15	35x35	HL2E122M#AS4
	1500	2.80	6.44	70	0.15	35x45	HL2E152M#AS6
	1800	3.16	7.27	60	0.15	35x50	HL2E182M#AS7
315 VDC Code: 2F Surge Voltage 365 VDC	**150**	0.86	1.98	850	0.20	22x25	HL2F151M#XS2
	220	1.10	2.53	580	0.20	22x30	HL2F221M#XS3
		1.10	2.53	580	0.20	25x25	HL2F221M#YS2

Additional designs on request · Weitere Designs auf Anfrage

Rated VoltageCode (Surge Voltage) V_r [V DC]	Capacitance C_r [µF]	Ripple Current at 105°C/120Hz I_r [A RMS]	Ripple Current at 40°C/120Hz [A RMS]	ESR (typ) at 20°C/100Hz [mΩ]	Dissipation Factor at 20°C/100Hz Tan δ	DxL [mm]	Product Code # = variable value, see terminal code in the product code
315 VDC Code: 2F Surge Voltage 365 VDC	**270**	1.24	2.85	480	0.20	22x35	HL2F271M#XS4
		1.25	2.88	480	0.20	25x30	HL2F271M#YS3
	330	1.40	3.22	390	0.20	22x40	HL2F331M#XS5
		1.44	3.31	390	0.20	25x35	HL2F331M#YS4
		1.43	3.29	390	0.20	30x25	HL2F331M#ZS2
	390	1.56	3.59	330	0.20	22x45	HL2F391M#XS6
		1.60	3.68	330	0.20	25x40	HL2F391M#YS5
		1.56	3.59	330	0.20	30x30	HL2F391M#ZS3
	470	1.79	4.12	280	0.20	25x45	HL2F471M#YS6
		1.48	3.40	280	0.20	35x25	HL2F471M#AS2
	560	1.99	4.58	230	0.20	25x50	HL2F561M#YS7
		1.93	4.44	230	0.20	30x35	HL2F561M#ZS4
		1.70	3.91	230	0.20	35x30	HL2F561M#AS3
	680	2.19	5.04	190	0.20	30x40	HL2F681M#ZS5
		1.96	4.51	190	0.20	35x35	HL2F681M#AS4
	820	2.51	5.77	160	0.20	30x50	HL2F821M#ZS7
		2.23	5.13	160	0.20	35x40	HL2F821M#AS5
	1000	2.55	5.87	130	0.20	35x45	HL2F102M#AS6
	1200	2.87	6.60	110	0.20	35x50	HL2F122M#AS7
400 VDC Code: 2G Surge Voltage 450 VDC	**120**	0.77	1.77	800	0.20	22x25	HL2G121M#XS2
	150	0.87	2.00	640	0.20	22x25	HL2G151M#XS2
		0.92	2.12	640	0.20	22x30	HL2G151M#XS3
		0.90	2.07	640	0.20	25x25	HL2G151M#YS2
	180	1.01	2.32	540	0.20	22x30	HL2G181M#XS3
		1.05	2.42	540	0.20	22x35	HL2G181M#XS4
		0.99	2.28	540	0.20	25x25	HL2G181M#YS2
		1.05	2.42	540	0.20	25x30	HL2G181M#YS3
	220	1.17	2.69	440	0.20	22x35	HL2G221M#XS4
		1.22	2.81	440	0.20	22x40	HL2G221M#XS5
		1.16	2.67	440	0.20	25x30	HL2G221M#YS3
		1.21	2.78	440	0.20	25x35	HL2G221M#YS4
		1.17	2.69	440	0.20	30x25	HL2G221M#ZS2
	270	1.35	3.11	360	0.20	22x40	HL2G271M#XS5
		1.40	3.22	360	0.20	22x45	HL2G271M#XS6
		1.35	3.11	360	0.20	25x35	HL2G271M#YS4
		1.40	3.22	360	0.20	25x40	HL2G271M#YS5
		1.28	2.94	360	0.20	30x25	HL2G271M#ZS2
	330	1.54	3.54	290	0.20	22x45	HL2G331M#XS6
		1.59	3.66	290	0.20	22x50	HL2G331M#XS7
		1.55	3.57	290	0.20	25x40	HL2G331M#YS5
		1.61	3.70	290	0.20	25x45	HL2G331M#YS6
		1.49	3.43	290	0.20	30x30	HL2G331M#ZS3
		1.52	3.50	290	0.20	35x25	HL2G331M#AS2
	390	1.74	4.00	250	0.20	25x45	HL2G391M#YS6
		1.80	4.14	250	0.20	25x50	HL2G391M#YS7

Additional designs on request · Weitere Designs auf Anfrage

Rated VoltageCode (Surge Voltage) V_r [V DC]	Capacitance C_r [µF]	Ripple Current at 105°C/120Hz I_r [A RMS]	Ripple Current at 40°C/120Hz [A RMS]	ESR (typ) at 20°C/100Hz [mΩ]	Dissipation Factor at 20°C/100Hz Tan δ	DxL [mm]	Product Code # = variable value, see terminal code in the product code
400 VDC Code: 2G Surge Voltage 450 VDC	**390**	1.62	3.73	250	0.20	30x30	HL2G391M#ZS3
		1.70	3.91	250	0.20	30x35	HL2G391M#ZS4
		1.59	3.66	250	0.20	35x25	HL2G391M#AS2
		1.68	3.86	250	0.20	35x30	HL2G391M#AS3
	470	1.98	4.55	210	0.20	25x50	HL2G471M#YS7
		1.86	4.28	210	0.20	30x35	HL2G471M#ZS4
		1.94	4.46	210	0.20	30x40	HL2G471M#ZS5
		1.84	4.23	210	0.20	35x30	HL2G471M#AS3
		1.92	4.42	210	0.20	35x35	HL2G471M#AS4
	560	2.11	4.85	180	0.20	30x40	HL2G561M#ZS5
		2.19	5.04	180	0.20	30x45	HL2G561M#ZS6
		2.09	4.81	180	0.20	35x35	HL2G561M#AS4
		2.18	5.01	180	0.20	35x40	HL2G561M#AS5
	680	2.48	5.70	150	0.20	30x50	HL2G681M#ZS7
		2.40	5.52	150	0.20	35x40	HL2G681M#AS5
		2.48	5.70	150	0.20	35x45	HL2G681M#AS6
	820	2.72	6.26	120	0.20	35x45	HL2G821M#AS6
		2.80	6.44	120	0.20	35x50	HL2G821M#AS7
	1 000	3.09	7.11	120	0.20	35x50	HL2G102M#AS7
420 VDC Code: 420V Surge Voltage 470 VDC	**100**	0.71	1.63	1020	0.20	22x25	HL420V101M#XS2
	120	0.77	1.77	850	0.20	22x25	HL420V121M#XS2
		0.82	1.89	850	0.20	22x30	HL420V121M#XS3
		0.81	1.86	850	0.20	25x25	HL420V121M#YS2
	150	0.96	2.21	680	0.20	22x25	HL420V151M#XS4AS
		0.92	2.12	680	0.20	22x30	HL420V151M#XS3
		0.96	2.21	680	0.20	22x35	HL420V151M#XS4
		0.90	2.07	680	0.20	25x25	HL420V151M#YS2
	180	1.05	2.42	570	0.20	22x35	HL420V181M#XS4
		1.10	2.53	570	0.20	22x40	HL420V181M#XS5
		0.99	2.28	570	0.20	25x25	HL420V181M#YS2
		1.05	2.42	570	0.20	25x30	HL420V181M#YS3
		1.06	2.44	570	0.20	30x25	HL420V181M#ZS2
	220	1.22	2.81	470	0.20	22x40	HL420V221M#XS5
		1.26	2.90	470	0.20	22x45	HL420V221M#XS6
		1.16	2.67	470	0.20	25x30	HL420V221M#YS3
		1.21	2.78	470	0.20	25x35	HL420V221M#YS4
		1.15	2.65	470	0.20	30x25	HL420V221M#ZS2
	270	1.40	3.22	380	0.20	22x45	HL420V271M#XS6
		1.44	3.31	380	0.20	22x50	HL420V271M#XS7
		1.35	3.11	380	0.20	25x35	HL420V271M#YS4
		1.40	3.22	380	0.20	25x40	HL420V271M#YS5
		1.28	2.94	380	0.20	30x25	HL420V271M#ZS2
		1.35	3.11	380	0.20	30x30	HL420V271M#ZS3
		1.38	3.17	380	0.20	35x25	HL420V271M#AS2
	330	1.59	3.66	310	0.20	22x50	HL420V331M#XS7
		1.55	3.57	310	0.20	25x40	HL420V331M#YS5

Additional designs on request · Weitere Designs auf Anfrage

Rated VoltageCode (Surge Voltage) V_r [V DC]	Capacitance C_r [µF]	Ripple Current at 105°C/120Hz I_r [A RMS]	Ripple Current at 40°C/120Hz [A RMS]	ESR (typ) at 20°C/100Hz [mΩ]	Dissipation Factor at 20°C/100Hz Tan δ	DxL [mm]	Product Code # = variable value, see terminal code in the product code
420 VDC Code: 420V Surge Voltage 470 VDC	**330**	1.61	3.70	310	0.20	25x45	HL420V331M#YS6
		1.66	3.82	310	0.20	25x50	HL420V331M#YS7
		1.49	3.43	310	0.20	30x30	HL420V331M#ZS3
		1.56	3.59	310	0.20	30x35	HL420V331M#ZS4
		1.46	3.36	310	0.20	35x25	HL420V331M#AS2
	390	1.74	4.00	270	0.20	25x45	HL420V391M#YS6
		1.80	4.14	270	0.20	25x50	HL420V391M#YS7
		1.70	3.91	270	0.20	30x35	HL420V391M#ZS4
		1.76	4.05	270	0.20	30x40	HL420V391M#ZS5
		1.67	3.84	270	0.20	35x30	HL420V391M#AS3
	470	1.98	4.55	220	0.20	25x50	HL420V471M#YS7
		1.94	4.46	220	0.20	30x40	HL420V471M#ZS5
		2.00	4.60	220	0.20	30x45	HL420V471M#ZS6
		1.84	4.23	220	0.20	35x30	HL420V471M#AS4
		1.92	4.42	220	0.20	35x35	HL420V471M#AS4
	560	2.19	5.04	190	0.20	30x45	HL420V561M#ZS6
		2.25	5.18	190	0.20	30x50	HL420V561M#ZS7
		2.09	4.81	190	0.20	35x35	HL420V561M#AS4
		2.18	5.01	190	0.20	35x40	HL420V561M#AS5
	680	2.48	5.70	150	0.20	30x50	HL420V681M#ZS7
		2.40	5.52	150	0.20	35x40	HL420V681M#AS5
		2.48	5.70	150	0.20	35x45	HL420V681M#AS6
		2.55	5.87	150	0.20	35x50	HL420V681M#AS7
	820	2.72	6.26	130	0.20	35x45	HL420V821M#AS6
450 VDC Code: 2W Surge Voltage 500 VDC	**82**	0.64	1.47	1250	0.20	22x25	HL2W820M#XS2
	100	0.71	1.63	1020	0.20	22x25	HL2W101M#XS2
	120	0.82	1.89	850	0.20	22x30	HL2W121M#XS3
		0.81	1.86	850	0.20	25x25	HL2W121M#YS2
	150	0.92	2.12	680	0.20	22x30	HL2W151M#XS3
		0.96	2.21	680	0.20	22x35	HL2W151M#XS4
		0.90	2.07	680	0.20	25x25	HL2W151M#Y23
		0.96	2.21	680	0.20	25x30	HL2W151M#YS3
	180	1.05	2.42	570	0.20	22x35	HL2W181M#XS4
		1.10	2.53	570	0.20	22x40	HL2W181M#XS5
		1.05	2.42	570	0.20	25x30	HL2W181M#YS3
		1.10	2.53	570	0.20	25x35	HL2W181M#YS4
		1.06	2.44	570	0.20	30x25	HL2W181M#ZS2
	220	1.22	2.81	470	0.20	22x40	HL2W221M#XS5
		1.26	2.90	470	0.20	22x45	HL2W221M#XS6
		1.30	2.99	470	0.20	22x50	HL2W221M#XS7
		1.21	2.78	470	0.20	25x35	HL2W221M#YS4
		1.27	2.92	470	0.20	25x40	HL2W221M#YS5
		1.15	2.65	470	0.20	30x25	HL2W221M#ZS2
		1.22	2.81	470	0.20	30x30	HL2W221M#ZS3
		1.24	2.85	470	0.20	35x25	HL2W221M#AS2

Additional designs on request · Weitere Designs auf Anfrage

Rated VoltageCode (Surge Voltage) V_r [V DC]	Capacitance C_r [µF]	Ripple Current at 105°C/120Hz I_r [A RMS]	Ripple Current at 40°C/120Hz [A RMS]	ESR (typ) at 20°C/100Hz [mΩ]	Dissipation Factor at 20°C/100Hz Tan δ	DxL [mm]	Product Code # = variable value, see terminal code in the product code
450 VDC Code: 2W Surge Voltage 500 VDC	**270**	1.44	3.31	380	0.20	22x50	HL2W271M#XS7
		1.40	3.22	380	0.20	25x40	HL2W271M#YS5
		1.45	3.34	380	0.20	25x45	HL2W271M#YS6
		1.35	3.11	380	0.20	30x30	HL2W271M#ZS3
		1.41	3.24	380	0.20	30x35	HL2W271M#ZS4
		1.32	3.04	380	0.20	35x25	HL2W271M#AS2
	330	1.61	3.70	310	0.20	25x45	HL2W331M#YS6
		1.66	3.82	310	0.20	25x50	HL2W331M#YS7
		1.56	3.59	310	0.20	30x35	HL2W331M#ZS4
		1.62	3.73	310	0.20	30x40	HL2W331M#ZS5
		1.54	3.54	310	0.20	35x30	HL2W331M#AS3
	390	1.76	4.05	270	0.20	30x40	HL2W391M#ZS5
		1.82	4.19	270	0.20	30x45	HL2W391M#ZS6
		1.67	3.84	270	0.20	35x30	HL2W391M#AS3
		1.75	4.03	270	0.20	35x35	HL2W391M#AS4
	470	2.00	4.60	220	0.20	30x45	HL2W471M#ZS6
		2.07	4.76	220	0.20	30x50	HL2W471M#ZS7
		1.92	4.42	220	0.20	35x35	HL2W471M#AS4
		1.99	4.58	220	0.20	35x40	HL2W471M#AS5
	560	2.25	5.18	190	0.20	30x50	HL2W561M#ZS7
		2.18	5.01	190	0.20	35x40	HL2W561M#AS5
		2.25	5.18	190	0.20	35x45	HL2W561M#AS6
	680	2.48	5.70	150	0.20	35x45	HL2W681M#AS6
		2.55	5.87	150	0.20	35x50	HL2W681M#AS7
	1 200	3.86	8.88	85	0.20	35x100	HL2W122M#AS17
500 VDC Code: 2H Surge Voltage 550 VDC	**47**	0.37	0.85	2040	0.20	22x25	HL2H470M#XS2
	56	0.40	0.92	1710	0.20	22x25	HL2H560M#XS2
	68	0.45	1.04	1410	0.20	22x25	HL2H680M#XS2
		0.48	1.10	1410	0.20	22x30	HL2H680M#XS3
		0.49	1.13	1410	0.20	25x25	HL2H680M#YS2
	82	0.54	1.24	1170	0.20	22x30	HL2H820M#XS3
		0.56	1.29	1170	0.20	22x35	HL2H820M#XS4
		0.55	1.27	1170	0.20	25x25	HL2H820M#YS2
		0.57	1.31	1170	0.20	25x30	HL2H820M#YS3
	100	0.62	1.43	960	0.20	22x35	HL2H101M#XS4
		0.65	1.50	960	0.20	22x40	HL2H101M#XS5
		0.64	1.47	960	0.20	25x30	HL2H101M#YS3
		0.67	1.54	960	0.20	25x35	HL2H101M#YS4
		0.68	1.56	960	0.20	30x25	HL2H101M#ZS2
	120	0.72	1.66	800	0.20	22x40	HL2H121M#XS5
		0.75	1.73	800	0.20	22x45	HL2H121M#XS6
		0.71	1.63	800	0.20	25x31	HL2H121M#YS3
		0.74	1.70	800	0.20	25x35	HL2H121M#YS4
		0.77	1.77	800	0.20	25x40	HL2H121M#YS5
		0.75	1.73	800	0.20	30x25	HL2H121M#ZS2
		0.79	1.82	800	0.20	30x30	HL2H121M#ZS3

Additional designs on request · Weitere Designs auf Anfrage

Rated VoltageCode (Surge Voltage) V_r [V DC]	Capacitance C_r [µF]	Ripple Current at 105°C/120Hz I_r [A RMS]	Ripple Current at 40°C/120Hz [A RMS]	ESR (typ) at 20°C/100Hz [mΩ]	Dissipation Factor at 20°C/100Hz Tan δ	DxL [mm]	Product Code # = variable value, see terminal code in the product code
500 VDC Code: 2H Surge Voltage 550 VDC	**150**	0.85	1.96	640	0.20	22x45	HL2H151M#XS6
		0.84	1.93	640	0.20	25x36	HL2H151M#YS4
		0.88	2.02	640	0.20	25x40	HL2H151M#YS5
		0.91	2.09	640	0.20	25x45	HL2H151M#YS6
		0.90	2.07	640	0.20	30x30	HL2H151M#ZS3
		0.94	2.16	640	0.20	30x35	HL2H151M#ZS4
		0.94	2.16	640	0.20	35x25	HL2H151M#AS2
	180	0.97	2.23	540	0.20	22x51	HL2H181M#XS7
		0.98	2.25	540	0.20	25x41	HL2H181M#YS5
		1.01	2.32	540	0.20	25x45	HL2H181M#YS6
		1.04	2.39	540	0.20	25x50	HL2H181M#YS7
		0.99	2.28	540	0.20	30x31	HL2H181M#ZS3
		1.04	2.39	540	0.20	30x35	HL2H181M#ZS4
		1.08	2.48	540	0.20	30x40	HL2H181M#ZS5
		1.04	2.39	540	0.20	35x25	HL2H181M#AS2
		1.09	2.51	540	0.20	35x30	HL2H181M#AS3
	220	1.17	2.69	440	0.20	25x50	HL2H221M#YS7
		1.17	2.69	440	0.20	30x36	HL2H221M#ZS4
		1.21	2.78	440	0.20	30x40	HL2H221M#ZS5
		1.26	2.90	440	0.20	30x45	HL2H221M#ZS6
		1.22	2.81	440	0.20	35x30	HL2H221M#AS3
		1.28	2.94	440	0.20	35x35	HL2H221M#AS4
	270	1.36	3.13	360	0.20	30x41	HL2H271M#ZS5
		1.41	3.24	360	0.20	30x45	HL2H271M#ZS6
		1.45	3.34	360	0.20	30x50	HL2H271M#ZS7
		1.44	3.31	360	0.20	35x35	HL2H271M#AS4
		1.49	3.43	360	0.20	35x40	HL2H271M#AS5
	330	1.63	3.75	290	0.20	30x50	HL2H331M#ZS7
		1.67	3.84	290	0.20	35x40	HL2H331M#AS5
		1.73	3.98	290	0.20	35x45	HL2H331M#AS6
	390	1.84	4.23	250	0.20	30x56	HL2H391M#ZS8
		1.89	4.35	250	0.20	30x60	HL2H391M#ZS9
		1.90	4.37	250	0.20	35x45	HL2H391M#AS6
		1.96	4.51	250	0.20	35x50	HL2H391M#AS7
	470	2.18	5.01	210	0.20	35x50	HL2H471M#AS7
	560	2.53	5.82	180	0.20	35x60	HL2H561M#AS9
	700	3.55	8.17	140	0.20	35x80	HL2H701M#AS13
	800	3.33	7.66	125	0.20	35x80	HL2H801M#AS13
	1 000	4.07	9.36	100	0.20	40x100	HL2H102M#BS17

Additional designs on request · Weitere Designs auf Anfrage

› Ripple Current Multiplier · Wechselstrommultiplikator

Frequency [Hz]	50/60	120	300	1k	≥ 10k
Multiplier	0.70	1.00	1.18	1.34	1.45

Temperature [°C]	40	45	50	55	60	65	70	75	80	85	90	95	100	105
Multiplier	2.3	2.2	2.1	2.0	2.0	1.9	1.8	1.6	1.5	1.4	1.3	1.2	1.1	1.0

Forced cooling – Wind speed [m/sec]	v < 0.25	v ≥ 0.25	v ≥ 0.5	v ≥ 1.0	v ≥ 2.0	v ≥ 3.0
Multiplier	1.00	1.05	1.10	1.15	1.20	1.25

› Life Time Table · Brauchbarkeitsdauer – Tabelle

HL	Useful life as function of ambient temperature and ripple current													
I_r at 105°C	x 1.0	x 1.1	x 1.2	x 1.3	x 1.4	x 1.5	x 1.6	x 1.7	x 1.8	x 1.9	x 2.0	x 2.1	x 2.2	x 2.3
T_a = 40°C	250	250	250	250	250	250	250	250	250	250	250	250	250	250
T_a = 50°C	250	250	250	250	250	250	250	250	250	250	250	250		
T_a = 60°C	250	250	250	250	250	250	250	250	250	250	225			
T_a = 65°C	250	250	250	250	250	250	250	225	194	167				
T_a = 70°C	250	250	250	233	208	185	163	142	123					
T_a = 75°C	196	180	163	147	132	117	103							
T_a = 80°C	124	113	103	93	83	74								
T_a = 85°C	78	72	65	59	52									
T_a = 90°C	49	45	41	37										
T_a = 95°C	31	28	26											
T_a = 100°C	19	18												
T_a = 105°C	12		khrs											

Max. value limited to 250 000 hours.

› Life Time Graph · Brauchbarkeitsdauer – Diagramm

Useful life depending on ambient temperature T_a and ripple current operating conditions I_r versus rated ripple current at the upper category temperature $I_{r,\,105°C,120Hz}$

Brauchbarkeitsdauer in Abhängigkeit von Umgebungstemperatur T_a und Wechselstrombelastung I_r im Verhältnis zur max. Wechselstrombelastung bei oberer Kategorietemperatur $I_{r,\,105°C,120Hz}$

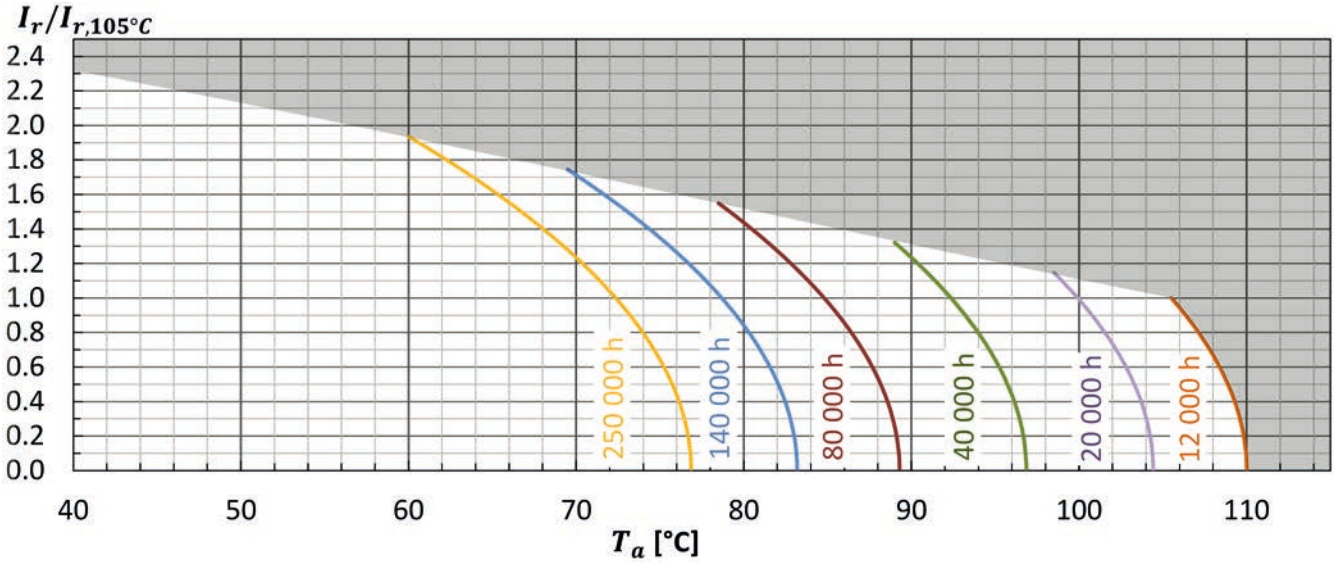

> Life Time Tests and Requirements · Anforderungen Brauchbarkeitsdauer

Life time test	Test procedure	End of Life criteria
Endurance test	T_a = 105°C; V_r, I_r applied 8000 hours	ΔC/C ≤ 20% (of initial value) Tanδ ≤ 200% (of specified value) I_L ≤ specified value
Useful life	T_a = 105°C; V_r, I_r applied 12000 hours	ΔC/C ≤ 30% (of initial value) Tanδ < 300% (of specified value) I_L ≤ specified value

Reference Specification: JIS C 5101-4, JIS C 5102, IEC 60384-4

HL2 · Snap-In · 12000 h/105 °C

Long Life

> Specifications · Spezifikationen

Items	Characteristics
Temperature range	-40°C ~ + 105°C
Capacitance tolerance (at 20°C)	Standard +/- 20%, -10%/+30% on request
Surge voltage	Repetitive max. 30 sec per 6 Minutes
Leakage current max. I_L (20°C, 5 min)	0.02 • C • V_r [µA] or 3 mA, which is smaller.
Useful life	12 000 hours at 105°C
Field failure rate	0.5 FIT = 0.5 • 10^{-9} Failures/hour
Reference standards	IEC 60384-4, JIS C 5101-4, AEC-Q200 qualified
Vibration	0.75mm, 10...55Hz, 10g, 3x2h
Sleeve withstanding voltage	3000 Vac/1 min between terminals bundled and plate*
Product Compliance	RoHS, REACH, Conflict Minerals a.o. - refer to p. 14–15

* Typical value using sleeve which is free from any scratches and damages

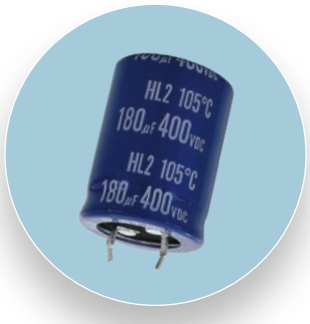

> Outline Drawings · Bauformen

Refer to page 9 for available terminal shapes and dimensions. · Auf Seite 9 finden Sie die verfügbaren Bauformen und Maße.

> Product Code · Bestellbezeichnung

Example: Series HL2 · 400 V · 470 µF ± 20 % · 30 x 50 mm · 4-pin short · without plate

HL2 **2G** **471** **M** **X** **Z** **S7** **WPEC**

Type of series

Capacitance code

The first two digits are significant. The last digit indicates the number of following zeros in µF.

Terminal symbol code

- R: 2-claw 6.3 mm
- S: 4-claw 6.3 mm
- C: 2-claw short 4.0 mm
- X: 4-claw short 4.0 mm
- E: 3-claw short 4.0 mm
- T: 2-lugs 4.5 mm

Outer design code

None:
PET sleeve and PVC plate

WPEC:
PET sleeve without plate

Others on request

Rated voltage Code

Code	Voltage
2D	200
2E	250
2G	400
420V	420
2W	450
2H	500

Capacitance tolerance

M : ± 20%
Q : -10% ~ +30%

Diameter Code

Code	ØD
W	20
X	22
Y	25
Z	30
A	35
B	40

Length Code

Code	L	Code	L
S1	20	S8	55
S2	25	S9	60
S3	30	S10	65
S4	35	S11	70
S5	40	S12	75
S6	45	S13	80
S7	50		

AIC EUROPE GmbH · Sales & technical support of AIC capacitors · Telefon: +49 (0)2151-4943-5 · E-Mail: info@aic-europe.com · www.aic-europe.com

Rated VoltageCode (Surge Voltage) V_r [V DC]	Capacitance C_r [µF]	Ripple Current at 105°C/120Hz I_r [A RMS]	Ripple Current at 40°C/120Hz [A RMS]	ESR (typ) at 20°C/100Hz [mΩ]	Dissipation Factor at 20°C/100Hz Tan δ	DxL [mm]	Product Code # = variable value, see terminal code in the product code
200 VDC Code: 2D Surge Voltage 250 VDC	**220**	0.97	2.72	456	0.15	20x25	HL22D221M#WS2
	270	1.16	3.25	372	0.15	20x30	HL22D271M#WS3
	330	1.35	3.78	304	0.15	20x35	HL22D331M#WS4
		1.31	3.67	304	0.15	22x30	HL22D331M#XS3
		1.25	3.50	304	0.15	25x25	HL22D331M#YS2
	390	1.45	4.06	257	0.15	25x30	HL22D391M#YS3
	470	1.74	4.87	214	0.15	22x40	HL22D471M#XS5
		1.60	4.48	214	0.15	25x30	HL22D471M#YS3
		1.56	4.37	214	0.15	30x25	HL22D471M#ZS2
	560	1.99	5.57	179	0.15	22x45	HL22D561M#XS6
		1.84	5.15	179	0.15	25x35	HL22D561M#YS4
	680	2.12	5.94	148	0.15	25x40	HL22D681M#YS5
		1.99	5.57	148	0.15	30x30	HL22D681M#ZS3
	820	2.44	6.83	122	0.15	25x45	HL22D821M#YS6
		2.31	6.47	122	0.15	30x35	HL22D821M#ZS4
	1 000	2.67	7.48	100	0.15	30x40	HL22D102M#ZS5
		2.26	6.33	100	0.15	35x30	HL22D102M#AS3
	1 200	3.06	8.57	84	0.15	30x45	HL22D122M#ZS6
		2.60	7.28	84	0.15	35x35	HL22D122M#AS4
	1 500	3.04	8.51	67	0.15	35x40	HL22D152M#AS5
250 VDC Code: 2E Surge Voltage 300 VDC	**150**	0.8	2.24	496	0.15	20x25	HL22E151M#WS2
	180	0.94	2.63	413	0.15	20x30	HL22E181M#WS3
		0.9	2.52	413	0.15	22x25	HL22E181M#XS2
	220	1.03	2.88	338	0.15	20x30	HL22E221M#WS3
	270	1.22	3.42	275	0.15	20x35	HL22E271M#WS4
		1.13	3.16	275	0.15	25x25	HL22E271M#YS2
	330	1.39	3.89	225	0.15	22x35	HL22E331M#XS4
		1.33	3.72	225	0.15	25x30	HL22E331M#YS3
	390	1.58	4.42	191	0.15	22x40	HL22E391M#XS5
		1.53	4.28	191	0.15	25x35	HL22E391M#YS4
		1.43	4.00	191	0.15	30x25	HL22E391M#ZS2
	470	1.90	5.32	162	0.15	22x50	HL22E471M#XS7
		1.77	4.96	162	0.15	25x40	HL22E471M#YS5
		1.66	4.65	162	0.15	30x30	HL22E471M#ZS3
	560	2.02	5.66	136	0.15	25x45	HL22E561M#YS6
	680	2.32	6.50	112	0.15	25x50	HL22E681M#YS7
		2.10	5.88	112	0.15	30x35	HL22E681M#ZS4
	820	2.42	6.78	93	0.15	30x40	HL22E821M#ZS5
	1 000	2.90	8.12	76	0.15	30x50	HL22E102M#ZS7
	1 200	2.83	7.92	64	0.15	35x45	HL22E122M#AS6
	1 500	3.29	9.21	61	0.15	35x50	HL22E152M#AS7

Additional designs on request · Weitere Designs auf Anfrage

Rated VoltageCode (Surge Voltage) V_r [V DC]	Capacitance C_r [µF]	Ripple Current at 105°C/120Hz I_r [A RMS]	Ripple Current at 40°C/120Hz [A RMS]	ESR (typ) at 20°C/100Hz [mΩ]	Dissipation Factor at 20°C/100Hz Tan δ	DxL [mm]	Product Code # = variable value, see terminal code in the product code
400 VDC Code: 2G Surge Voltage 450 VDC	**47**	0.46	1.29	1625	0.15	20x25	HL22G470M#WS2
	68	0.56	1.57	1121	0.15	20x25	HL22G680M#WS2
	82	0.64	1.79	1126	0.15	20x25	HL22G820M#WS2
	100	0.77	2.16	781	0.15	20x35	HL22G101M#WS4
		0.75	2.10	781	0.15	22x30	HL22G101M#XS3
		0.72	2.02	781	0.15	25x25	HL22G101M#YS2
	120	0.85	2.38	651	0.15	20x35	HL22G121M#WS4
		0.87	2.44	651	0.15	22x35	HL22G121M#XS4
		0.84	2.35	651	0.15	25x30	HL22G121M#YS3
	150	1.02	2.86	521	0.15	22x40	HL22G151M#XS5
		0.94	2.63	521	0.15	25x30	HL22G151M#YS3
		0.88	2.46	521	0.15	30x25	HL22G151M#ZS2
	180	1.18	3.30	475	0.15	22x45	HL22G181M#XS6
		1.09	3.05	475	0.15	25x35	HL22G181M#YS4
		1.02	2.86	475	0.15	30x30	HL22G181M#ZS3
	220	1.35	3.78	389	0.15	22x50	HL22G221M#XS7
		1.26	3.53	389	0.15	25x40	HL22G221M#YS5
		1.13	3.16	389	0.15	30x30	HL22G221M#ZS3
	270	1.46	4.09	317	0.15	25x45	HL22G271M#YS6
		1.33	3.72	317	0.15	30x35	HL22G271M#ZS4
		1.33	3.72	317	0.15	35x30	HL22G271M#AS3
	330	1.67	4.68	259	0.15	25x50	HL22G331M#YS7
		1.54	4.31	259	0.15	30x40	HL22G331M#ZS5
		1.54	4.31	259	0.15	35x35	HL22G331M#AS4
	390	1.75	4.90	219	0.15	30x45	HL22G391M#ZS6
		1.67	4.68	219	0.15	35x35	HL22G391M#AS4
		2.16	6.04	219	0.15	40x31	HL22G391M#BS3
	470	2.00	5.61	182	0.15	30x50	HL22G471M#ZS7
		1.92	5.38	182	0.15	35x40	HL22G471M#AS5
	560	2.19	6.13	156	0.15	35x45	HL22G561M#AS6
	680	2.51	7.02	126	0.15	35x50	HL22G681M#AS7
		2.75	7.70	124	0.15	35x50	HL22G681M#AS72P
		2.44	6.84	130	0.15	40x40	HL22G681M#BS5
	820	2.98	8.35	105	0.15	35x70	HL22G821M#AS11
	1 000	3.48	9.73	86	0.15	35x80	HL22G102M#AS13
420 VDC Code: 420V Surge Voltage 470 VDC	**150**	0.94	2.63	570	0.15	30x30	HL2420V151M#ZS3
	180	1.08	3.02	475	0.15	30x35	HL2420V181M#ZS4
		1.08	3.02	475	0.15	35x30	HL2420V181M#AS3
	220	1.36	3.82	389	0.15	25x50	HL2420V221M#YS7
		1.20	3.36	389	0.15	30x35	HL2420V221M#ZS4
		1.20	3.36	389	0.15	35x30	HL2420V221M#AS3
	330	1.54	4.31	259	0.15	30x40	HL2420V331M#ZS5

Additional designs on request · Weitere Designs auf Anfrage

Rated VoltageCode (Surge Voltage) V_r [V DC]	Capacitance C_r [µF]	Ripple Current at 105°C/120Hz I_r [A RMS]	Ripple Current at 40°C/120Hz [A RMS]	ESR (typ) at 20°C/100Hz [mΩ]	Dissipation Factor at 20°C/100Hz Tan δ	DxL [mm]	Product Code # = variable value, see terminal code in the product code
450 VDC Code: 2W Surge Voltage 500 VDC	**47**	0.46	1.29	1820	0.15	20x25	HL22W470M#WS2
	56	0.55	1.54	1527	0.15	20x30	HL22W560M#WS3
		0.53	1.48	1527	0.15	22x25	HL22W560M#XS2
	68	0.60	1.68	1258	0.15	20x30	HL22W680M#WS3
		0.62	1.74	1258	0.15	22x30	HL22W680M#XS3
		0.59	1.65	1258	0.15	25x25	HL22W680M#YS2
	82	0.70	1.96	1043	0.15	20x35	HL22W820M#WS4
	100	0.79	2.21	855	0.15	22x35	HL22W101M#XS4
		0.72	2.00	855	0.15	25x25	HL22W101M#YS2
	120	0.91	2.55	713	0.15	22x40	HL22W121M#XS5
		0.88	2.46	713	0.15	25x35	HL22W121M#YS4
		0.79	2.21	713	0.15	30x25	HL22W121M#ZS2
	150	1.12	3.14	570	0.15	22x50	HL22W151M#XS7
		1.04	2.91	570	0.15	25x40	HL22W151M#YS5
		0.94	2.63	570	0.15	30x30	HL22W151M#ZS3
	180	1.19	3.33	475	0.15	25x45	HL22W181M#YS6
		1.08	3.02	475	0.15	30x35	HL22W181M#ZS4
	220	1.40	3.92	389	0.15	25x40	HL22W221M#YS5
		1.20	3.36	389	0.15	35x30	HL22W221M#AS3
	270	1.45	4.06	317	0.15	30x45	HL22W271M#ZS6
		1.40	3.92	317	0.15	35x35	HL22W271M#AS4
	330	1.67	4.68	259	0.15	30x50	HL22W331M#ZS7
		1.62	4.54	259	0.15	35x40	HL22W331M#AS5
	390	1.83	5.12	224	0.15	35x45	HL22W391M#AS6
	470	2.08	5.82	190	0.15	35x50	HL22W471M#AS7
500 VDC Code: 2H Surge Voltage 550 VDC	**100**	0.74	2.06	960	0.20	25x45	HL22H101M#YS6
	120	0.85	2.37	800	0.20	25x50	HL22H121M#YS7
		0.79	2.22	800	0.20	30x35	HL22H121M#ZS4
		0.79	2.22	800	0.20	35x30	HL22H121M#AS3
	150	0.94	2.62	640	0.20	30x40	HL22H151M#ZS5
		0.94	2.62	640	0.20	35x35	HL22H151M#AS4
	180	1.11	3.11	540	0.20	30x50	HL22H181M#ZS7
		1.07	2.99	540	0.20	35x40	HL22H181M#AS5
	220	1.23	3.45	440	0.20	35x45	HL22H221M#AS6
	270	1.42	3.97	360	0.20	35x50	HL22H271M#AS7
	330	1.56	4.37	340	0.20	35x60	HL22H331M#AS9
	390	1.94	5.43	250	0.20	40x61	HL22H391M#BS9

Additional designs on request · Weitere Designs auf Anfrage

› Ripple Current Multiplier · Wechselstrommultiplikator

Frequency [Hz]	50/60	120	300	1k	≥ 10k
Multiplier	0.70	1.00	1.18	1.34	1.45

Temperature [°C]	40	45	50	55	60	65	70	75	80	85	90	95	100	105
Multiplier	2.8	2.7	2.6	2.5	2.4	2.3	2.1	2.1	2.0	2.0	1.8	1.6	1.2	1.0

Forced cooling – Wind speed [m/sec]	v < 0.25	v ≥ 0.25	v ≥ 0.5	v ≥ 1.0	v ≥ 2.0	v ≥ 3.0
Multiplier	1.00	1.05	1.10	1.15	1.20	1.25

> Life Time Table · Brauchbarkeitsdauer – Tabelle

HL2	Useful life as function of ambient temperature and ripple current													
I_r at 105°C	x 1.0	x 1.2	x 1.4	x 1.6	x 1.8	x 2.0	x 2.1	x 2.2	x 2.3	x 2.4	x 2.5	x 2.6	x 2.7	x 2.8
T_a = 40°C	250	250	250	250	250	250	250	250	250	250	250	250	250	250
T_a = 45°C	250	250	250	250	250	250	250	250	250	250	250	250	250	
T_a = 50°C	250	250	250	250	250	250	250	250	250	250	250	211		
T_a = 55°C	250	250	250	250	250	250	250	250	237	198	163			
T_a = 60°C	250	250	250	250	250	248	211	179	150	125				
T_a = 65°C	250	250	250	250	210	156	133	113	94					
T_a = 70°C	250	250	219	173	133	99	84							
T_a = 75°C	201	169	138	109	84	62	53							
T_a = 80°C	127	107	87	69	53	39								
T_a = 85°C	80	67	55	43	33	25								
T_a = 90°C	50	42	35	27	21									
T_a = 95°C	32	27	22	17										
T_a = 100°C	20	17												
T_a = 105°C	12		khrs	Max. value limited to 250 000 hours.										

> Life Time Graph · Brauchbarkeitsdauer – Diagramm

Useful life depending on ambient temperature T_a and ripple current operating conditions I_r versus rated ripple current at the upper category temperature $I_{r,\,105°C,120Hz}$

Brauchbarkeitsdauer in Abhängigkeit von Umgebungstemperatur T_a und Wechselstrombelastung I_r im Verhältnis zur max. Wechselstrombelastung bei oberer Kategorietemperatur $I_{r,\,105°C,120Hz}$

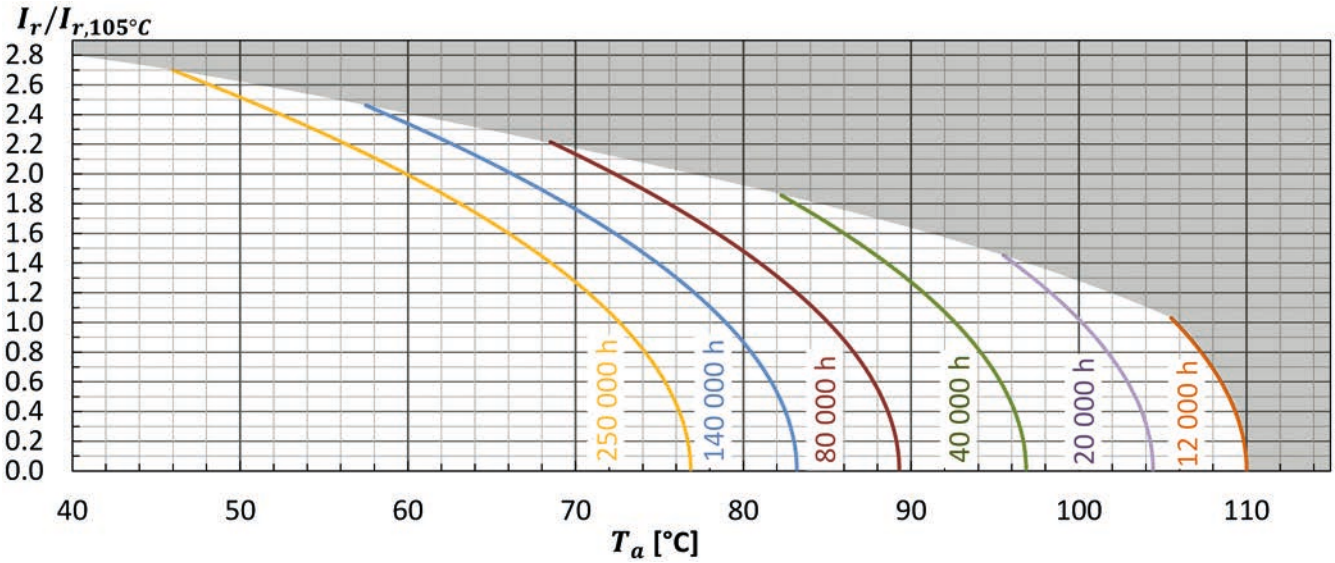

> Life Time Tests and Requirements · Anforderungen Brauchbarkeitsdauer

Life time test	Test procedure	End of Life criteria
Endurance test	T_a = 105°C; V_r, I_r applied 8000 hours	ΔC/C ≤ 15% (of initial value) Tanδ ≤ 175% (of specified value) I_L ≤ specified value
Useful life	T_a = 105°C; V_r, I_r applied 12000 hours	ΔC/C ≤ 20% (of initial value) Tanδ < 200% (of specified value) I_L ≤ specified value

Reference Specification: JIS C 5101-4, JIS C 5102, IEC 60384-4

DH · Snap-In · 6000h/105 °C

Permanent Charge-Discharge application Design

These capacitors have been developed especially for deep and frequent charge – discharge applications such as AC servo motors, lamp flash, X-ray, etc.

Diese Kondensatoren wurden speziell für Anwendungen mit häufigen und tiefen Lade-/Entladevorgängen entwickelt wie z.B. AC Motoren, Blitzlampen, Röntgengeräte usw.

› Specifications · Spezifikationen

Items	Characteristics
Temperature range	-25°C ~ + 105°C
Capacitance tolerance (at 20°C)	Standard +/- 20%, -10%/+30% on request
Surge voltage	Repetitive max. 30 sec per 6 Minutes
Leakage current max. I_L (20°C, 5 min)	0.02 • C • V_r [µA] or 3 mA, which is smaller.
Useful life	6000 hours at 105°C
Field failure rate	0.5 FIT = 0.5 • 10^{-9} Failures/hour
Reference standards	IEC 60384-4, JIS C 5101-4, AEC-Q200 qualified
Vibration	0.75mm, 10...55Hz, 10g, 3x2h
Charge – Discharge	ΔV = 150VDC, f = 6Hz life ≥ 200 Mio cycles at 40°C
Sleeve withstanding voltage	3000 Vac/1 min between terminals bundled and plate*
Product Compliance	RoHS, REACH, Conflict Minerals a.o. - refer to p. 14–15

* Typical value using sleeve which is free from any scratches and damages

› Outline Drawings · Bauformen

Refer to page 9 for available terminal shapes and dimensions. · Auf Seite 9 finden Sie die verfügbaren Bauformen und Maße.

› Product Code · Bestellbezeichnung

Example: Series DH · 400 V · 100 µF ± 20 % · 22 x 25 mm · 2-Pin · without plate

DH	2G	101	M	R	X	S2	WPEC

Type of series

Capacitance code

The first two digits are significant. The last digit indicates the number of following zeros in µF.

Terminal symbol code

- R: 2-claw 6.3 mm
- S: 4-claw 6.3 mm
- C: 2-claw short 4.0 mm
- X: 4-claw short 4.0 mm
- E: 3-claw short 4.0 mm
- T: 2-lugs 4.5 mm

Outer design code

None:
PET sleeve and PVC plate

WPEC:
PET sleeve without plate

Others on request

Rated voltage code

Code	Voltage
2G	400
2W	450

Capacitance tolerance

M : ± 20%

Diameter Code

Code	ØD
X	22
Y	25
Z	30
A	35

Length Code

Code	L	Code	L
S2	25	S6	45
S3	30	S7	50
S4	35	S13	80
S5	40		

Rated VoltageCode (Surge Voltage) V_r [V DC]	Capacitance C_r [µF]	Ripple Current at 105°C/120Hz I_r [A RMS]	Ripple Current at 40°C/120Hz [A RMS]	ESR (typ) at 20°C/100Hz [mΩ]	Dissipation Factor at 20°C/100Hz Tan δ	DxL [mm]	Product Code # = variable value, see terminal code in the product code
400 VDC Code: 2G Surge Voltage 450 VDC	**100**	0.70	1.61	1100	0.20	22x25	DH2G101M#XS2
	120	0.82	1.89	920	0.20	22x30	DH2G121M#XS3
		0.81	1.86	920	0.20	25x25	DH2G121M#YS2
	150	0.96	2.21	730	0.20	22x35	DH2G151M#XS4
	180	1.09	2.51	610	0.20	22x40	DH2G181M#XS5
		1.04	2.39	610	0.20	25x30	DH2G181M#YS3
	220	1.25	2.88	500	0.20	22x45	DH2G221M#XS6
		1.21	2.78	500	0.20	25x35	DH2G221M#YS4
		1.15	2.65	500	0.20	30x25	DH2G221M#ZS2
	270	1.44	3.31	410	0.20	22x50	DH2G271M#XS7
		1.39	3.20	410	0.20	25x40	DH2G271M#YS5
		1.34	3.08	410	0.20	30x30	DH2G271M#ZS3
		1.32	3.04	410	0.20	35x25	DH2G271M#AS2
	330	1.60	3.68	330	0.20	25x45	DH2G331M#YS6
		1.55	3.57	330	0.20	30x35	DH2G331M#ZS4
		1.68	3.86	330	0.20	35x30	DH2G331M#AS3
	390	1.76	4.05	280	0.20	30x40	DH2G391M#ZS5
		1.67	3.84	280	0.20	35x30	DH2G391M#AS3
	470	2.00	4.60	230	0.20	30x45	DH2G471M#ZS6
		1.91	4.39	230	0.20	35x35	DH2G471M#AS4
	560	2.25	5.18	200	0.20	30x50	DH2G561M#ZS7
		2.17	4.99	200	0.20	35x40	DH2G561M#AS5
	680	2.47	5.68	160	0.20	35x45	DH2G681M#AS6
	1 500	4.99	11.48	55	0.20	35x80	DH2G152M#AS132PCC
450 VDC Code: 2W Surge Voltage 500 VDC	**82**	0.64	1.47	1220	0.20	22x25	DH2W820M#XS2
	100	0.75	1.73	1000	0.20	22x30	DH2W101M#XS3
		0.74	1.70	1000	0.20	25x25	DH2W101M#YS2
	120	0.86	1.98	830	0.20	22x35	DH2W121M#XS4
		0.85	1.96	830	0.20	25x30	DH2W121M#YS3
	150	1.00	2.30	660	0.20	22x40	DH2W151M#XS5
		1.00	2.30	660	0.20	25x35	DH2W151M#YS4
		0.95	2.19	660	0.20	30x25	DH2W151M#ZS2
	180	1.13	2.60	550	0.20	22x45	DH2W181M#XS6
		1.09	2.51	550	0.20	25x35	DH2W181M#YS4
	220	1.30	2.99	450	0.20	25x45	DH2W221M#YS6
		1.21	2.78	450	0.20	30x30	DH2W221M#ZS3
		1.19	2.74	450	0.20	35x25	DH2W221M#AS2
	270	1.49	3.43	370	0.20	25x50	DH2W271M#YS7
		1.41	3.24	370	0.20	30x35	DH2W271M#ZS4
		1.39	3.20	370	0.20	35x30	DH2W271M#AS3
	300	1.48	3.40	323	0,20	35x30	DH2W301M#AS3
	330	1.62	3.73	300	0.20	30x40	DH2W331M#ZS5
		1.60	3.68	300	0.20	35x35	DH2W331M#AS4
	390	1.88	4.32	260	0.20	30x50	DH2W391M#ZS7
		1.81	4.16	260	0.20	35x40	DH2W391M#AS5
	470	2.05	4.72	210	0.20	35x45	DH2W471M#AS6
	500	2.11	4.85	198	0.20	35x45	DH2W501M#AS6
	560	2.31	5.31	180	0.20	35x50	DH2W561M#AS7

Additional designs on request · Weitere Designs auf Anfrage

› Ripple Current Multiplier · Wechselstrommultiplikator

Frequency [Hz]	50/60	120	300	1k	≥ 10k
Multiplier	0.70	1.00	1.18	1.34	1.45

Temperature [°C]	40	45	50	55	60	65	70	75	80	85	90	95	100	105
Multiplier	2.3	2.1	2.0	2.0	1.9	1.8	1.7	1.6	1.4	1.4	1.2	1.1	1.1	1.0

Forced cooling – Wind speed [m/sec]	v < 0.25	v ≥ 0.25	v ≥ 0.5	v ≥ 1.0	v ≥ 2.0	v ≥ 3.0
Multiplier	1.00	1.05	1.10	1.15	1.20	1.25

› Life Time Table · Brauchbarkeitsdauer – Tabelle

DH	Useful life as function of ambient temperature and ripple current													
I_r at 105°C	x 1.0	x 1.1	x 1.2	x 1.3	x 1.4	x 1.5	x 1.6	x 1.7	x 1.8	x 1.9	x 2.0	x 2.1	x 2.2	x 2.3
T_a = 40°C	250	250	250	250	250	250	250	250	250	250	250	250	250	250
T_a = 45°C	250	250	250	250	250	250	250	250	250	250	250	250		
T_a = 50°C	250	250	250	250	250	250	250	250	250	250	250			
T_a = 55°C	250	250	250	250	250	250	250	250	243	209	178			
T_a = 60°C	250	250	250	250	250	231	203	177	154	132				
T_a = 65°C	245	225	204	184	165	146	128	112	97					
T_a = 70°C	155	142	129	116	104	92	81	71						
T_a = 75°C	98	90	81	73	66	58	51							
T_a = 80°C	62	56	51	46	41									
T_a = 85°C	39	36	32	29	26									
T_a = 90°C	24	22	20											
T_a = 95°C	15	14												
T_a = 100°C	9	9												
T_a = 105°C	6		khrs	Max. value limited to 250 000 hours.										

› Life Time Graph · Brauchbarkeitsdauer – Diagramm

Useful life depending on ambient temperature T_a and ripple current operating conditions I_r versus rated ripple current at the upper category temperature $I_{r,\,105°C,120Hz}$

Brauchbarkeitsdauer in Abhängigkeit von Umgebungstemperatur T_a und Wechselstrombelastung I_r im Verhältnis zur max. Wechselstrombelastung bei oberer Kategorietemperatur $I_{r,\,105°C,120Hz}$

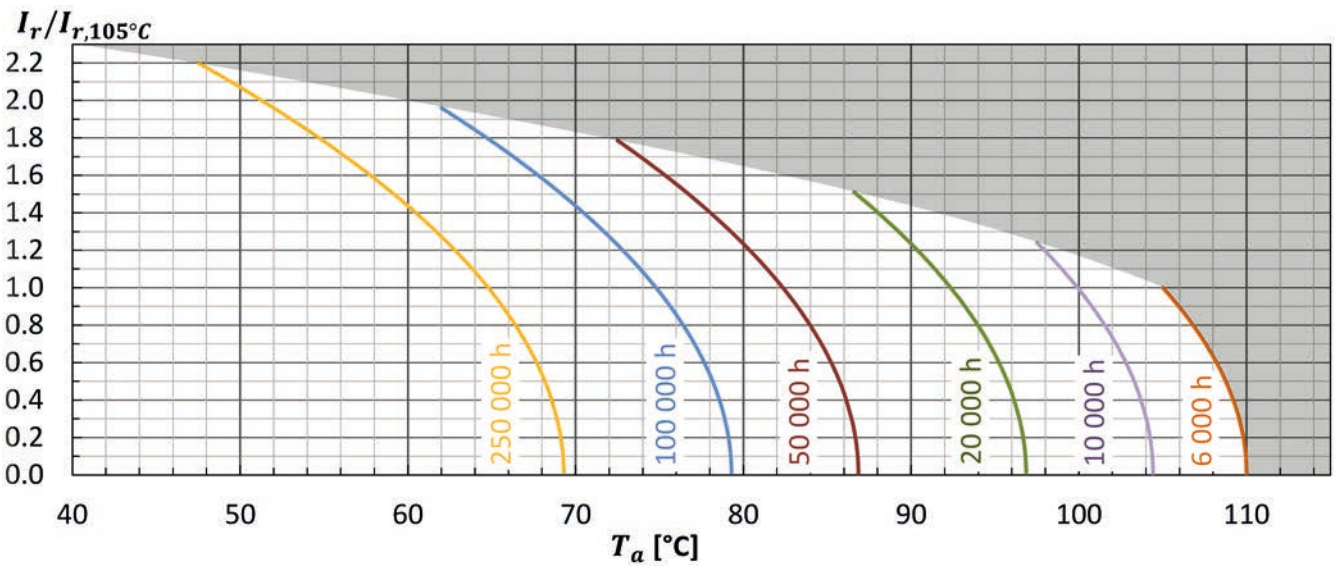

> Life Time Tests and Requirements · Anforderungen Brauchbarkeitsdauer

Life time test	Test procedure	End of Life criteria
Endurance test	T_a = 105°C; V_r, I_r applied 5000 hours f = 6Hz ≥ 100 Mio cycles at 40°C	ΔC/C ≤ 20% (of initial value) Tanδ ≤ 200% (of specified value) I_L ≤ specified value
Useful life	T_a = 105°C; V_r, I_r applied 6000 hours f = 6Hz ≥ 150 Mio cycles at 40°C	ΔC/C ≤ 30% (of initial value) Tanδ < 300% (of specified value) I_L ≤ specified value

Reference Specification: JIS C 5101-4, JIS C 5102, IEC 60384-4

ZLR · Snap-In · 8000 h/105 °C

High Ripple Current · ULTRA low ESR · Compact Design

› Specifications · Spezifikationen

Items	Characteristics
Temperature range	-25°C ~ + 105°C
Capacitance tolerance (at 20°C)	Standard +/- 20%, -10%/+30% on request
Surge voltage	Repetitive max. 30 sec per 6 Minutes
Leakage current max. I_L (20°C, 5 min)	0.02 • C • V_r [µA] or 3 mA, which is smaller.
Useful life	8000 hours at 105°C
Field failure rate	0.5 FIT = 0.5 • 10^{-9} Failures/hour
Reference standards	IEC 60384-4, JIS C 5101-4, AEC-Q200 qualified
Vibration	0.75mm, 10...55Hz, 10g, 3x2h
Sleeve withstanding voltage	3000 Vac/1 min between terminals bundled and plate*
Product Compliance	RoHS, REACH, Conflict Minerals a.o. - refer to p. 14–15

* Typical value using sleeve which is free from any scratches and damages

› Outline Drawings · Bauformen

Refer to page 9 for available terminal shapes and dimensions. · Auf Seite 9 finden Sie die verfügbaren Bauformen und Maße.

› Product Code · Bestellbezeichnung

Example: Series ZLR · 450 V · 560 µF ± 20 % · 35 x 50 mm · 2-pin short · without plate

ZLR 2W 561 M C A S7 WPEC

Type of series

Capacitance code

The first two digits are significant. The last digit indicates the number of following zeros in µF.

Terminal symbol code

R: 2-claw 6.3 mm
S: 4-claw 6.3 mm
C: 2-claw short 4.0 mm
X: 4-claw short 4.0 mm
E: 3-claw short 4.0 mm
T: 2-lugs 4.5 mm

Diameter code

Code	ØD
X	22
Y	25
Z	30
A	35

Outer design code

None: PET sleeve and PVC plate
WPEC: PET sleeve without plate

Rated voltage code

Code	Voltage
2G	400
2W	450

Capacitance tolerance

M : ± 20%
Q : -10% ~ +30%

Length Code

Code	L	Code	L
S2	25	S6	45
S3	30	S7	50
S4	35	S8	55
S5	40	S9	60

Rated VoltageCode (Surge Voltage) V_r [V DC]	Capacitance C_r [µF]	Ripple Current at 105°C/120Hz I_r [A RMS]	Ripple Current at 40°C/120Hz [A RMS]	ESR (typ) at 20°C/100Hz [mΩ]	Dissipation Factor at 20°C/100Hz Tan δ	DxL [mm]	Product Code # = variable value, see terminal code in the product code
400 VDC Code: 2G Surge Voltage 450 VDC	**100**	0.83	2.08	470	0.20	22x25	ZLR2G101M#XS2
	120	0.94	2.35	385	0.20	22x30	ZLR2G121M#XS3
		0.95	2.38	385	0.20	25x25	ZLR2G121M#YS2
	150	1.09	2.73	335	0.20	22x35	ZLR2G151M#XS4
	180	1.22	3.05	285	0.20	22x40	ZLR2G181M#XS5
		1.21	3.03	285	0.20	25x30	ZLR2G181M#YS3
		1.26	3.15	215	0.20	30x25	ZLR2G181M#ZS2
	220	1.37	3.43	230	0.20	22x45	ZLR2G221M#XS6
		1.38	3.45	230	0.20	25x35	ZLR2G221M#YS4
		1.44	3.60	180	0.20	30x30	ZLR2G221M#ZS3
	270	1.54	3.85	185	0.20	22x50	ZLR2G271M#XS7
		1.56	3.90	185	0.20	25x40	ZLR2G271M#YS5
		1.65	4.13	145	0.20	30x35	ZLR2G271M#ZS4
		1.61	4.03	145	0.20	35x25	ZLR2G271M#AS2
	330	1.77	4.43	145	0.20	25x50	ZLR2G331M#YS7
		1.85	4.63	115	0.20	30x40	ZLR2G331M#ZS5
		2.42	5.81	100	0.20	30x50	ZLR2G331Q#ZS7CC
		1.83	4.58	115	0.20	35x30	ZLR2G331M#AS3
	390	2.05	5.13	95	0.20	30x45	ZLR2G391M#ZS6
		2.05	5.13	95	0.20	35x35	ZLR2G391M#AS4
	470	2.27	5.68	80	0.20	30x50	ZLR2G471M#ZS7
		2.29	5.73	80	0.20	35x40	ZLR2G471M#AS5
	560	2.54	6.35	65	0.20	35x45	ZLR2G561M#AS6
		3.16	7.90	55	0.20	35x60	ZLR2G561Q#AS9CCR
	680	2.82	7.05	55	0.20	35x50	ZLR2G681M#AS7
		3.49	8.73	50	0.20	35x60	ZLR2G681Q#AS9CCR
	820	3.25	8.13	45	0.20	35x60	ZLR2G821M#AS9
450 VDC Code: 2W Surge Voltage 500 VDC	**68**	0.66	1.65	720	0.20	22x25	ZLR2W680M#XS2
	100	0.83	2.08	490	0.20	22x30	ZLR2W101M#XS3
		0.84	2.10	490	0.20	25x25	ZLR2W101M#YS2
	120	0.94	2.35	420	0.20	22x35	ZLR2W121M#XS4
		0.95	2.38	420	0.20	25x30	ZLR2W121M#YS3
	150	1.07	2.68	350	0.20	22x40	ZLR2W151M#XS5
		1.10	2.75	350	0.20	25x35	ZLR2W151M#YS4
		1.11	2.78	285	0.20	30x25	ZLR2W151M#ZS2
	180	1.19	2.98	300	0.20	22x45	ZLR2W181M#XS6
		1.23	3.08	300	0.20	25x40	ZLR2W181M#YS5
		1.26	3.15	235	0.20	30x30	ZLR2W181M#ZS3
	220	1.34	3.35	245	0.20	22x50	ZLR2W221M#XS7
		1.38	3.45	245	0.20	25x45	ZLR2W221M#YS6
		1.43	3.58	190	0.20	30x35	ZLR2W221M#ZS4
		1.42	3.55	190	0.20	35x25	ZLR2W221M#AS2
	270	1.54	3.85	195	0.20	25x50	ZLR2W271M#YS7
		1.62	4.05	150	0.20	30x40	ZLR2W271M#ZS5
		1.63	4.08	150	0.20	35x30	ZLR2W271M#AS3

Additional designs on request · Weitere Designs auf Anfrage

Rated VoltageCode (Surge Voltage) V_r [V DC]	Capacitance C_r [µF]	Ripple Current at 105°C/120Hz I_r [A RMS]	Ripple Current at 40°C/120Hz [A RMS]	ESR (typ) at 20°C/100Hz [mΩ]	Dissipation Factor at 20°C/100Hz Tan δ	DxL [mm]	Product Code # = variable value, see terminal code in the product code
450 VDC Code: 2W Surge Voltage 500 VDC	**330**	1.81	4.53	120	0.20	30x45	ZLR2W331M#ZS6
		1.84	4.60	120	0.20	35x35	ZLR2W331M#AS4
	390	1.99	4.98	95	0.20	30x50	ZLR2W391M#ZS7
		2.04	5.10	95	0.20	35x40	ZLR2W391M#AS5
	470	2.27	5.68	80	0.20	35x45	ZLR2W471M#AS6
	560	2.50	6.25	70	0.20	35x50	ZLR2W561M#AS7
	680	2.87	7.18	60	0.20	35x55	ZLR2W681M#AS8

Additional designs on request · Weitere Designs auf Anfrage

› Ripple Current Multiplier · Wechselstrommultiplikator

Frequency [Hz]	50/60	120	300	1k	≥ 10k
Multiplier	0.70	1.00	1.30	1.50	1.80

Ta (°C)	40	45	50	55	60	65	70	75	80	85	90	95	100	105
Multiplier	2.5	2.4	2.3	2.2	2.1	2.0	1.9	1.7	1.6	1.5	1.4	1.2	1.1	1.0

Forced cooling – Wind speed [m/sec]	v < 0.25	v ≥ 0.25	v ≥ 0.5	v ≥ 1.0	v ≥ 2.0	v ≥ 3.0
Multiplier	1.00	1.05	1.10	1.15	1.20	1.25

› Life Time Table · Brauchbarkeitsdauer – Tabelle

ZLR	Ripple Current Multiplier													
T_a	1.0	1.1	1.2	1.4	1.5	1.6	1.7	1.9	2.0	2.1	2.2	2.3	2.4	2.5
40°C	250	250	250	250	250	250	250	250	250	250	250	250	250	227
45°C	250	250	250	250	250	250	250	250	250	250	250	233	184	
50°C	250	250	250	250	250	250	250	250	250	230	185	147		
55°C	250	250	250	250	250	250	250	218	179	145	117			
60°C	250	250	250	250	250	235	198	138	113	92				
65°C	250	250	250	201	174	148	126	87	72					
70°C	207	186	165	127	110	94	79	55						
75°C	131	117	105	80	69	59	50							
80°C	83	74	66	51	44	38								
85°C	52	47	42	32	28									
90°C	33	30	26	20										
95°C	21	19	17											
100°C	13	12												
105°C	8													

khrs Max. value limited to 250 000 hours.

› Life Time Graph · Brauchbarkeitsdauer – Diagramm

Useful life depending on ambient temperature T_a and ripple current operating conditions I_r versus rated ripple current at the upper category temperature $I_{r,\ 105°C,120Hz}$

Brauchbarkeitsdauer in Abhängigkeit von Umgebungstemperatur T_a und Wechselstrombelastung I_r im Verhältnis zur max. Wechselstrombelastung bei oberer Kategorietemperatur $I_{r,\ 105°C,120Hz}$

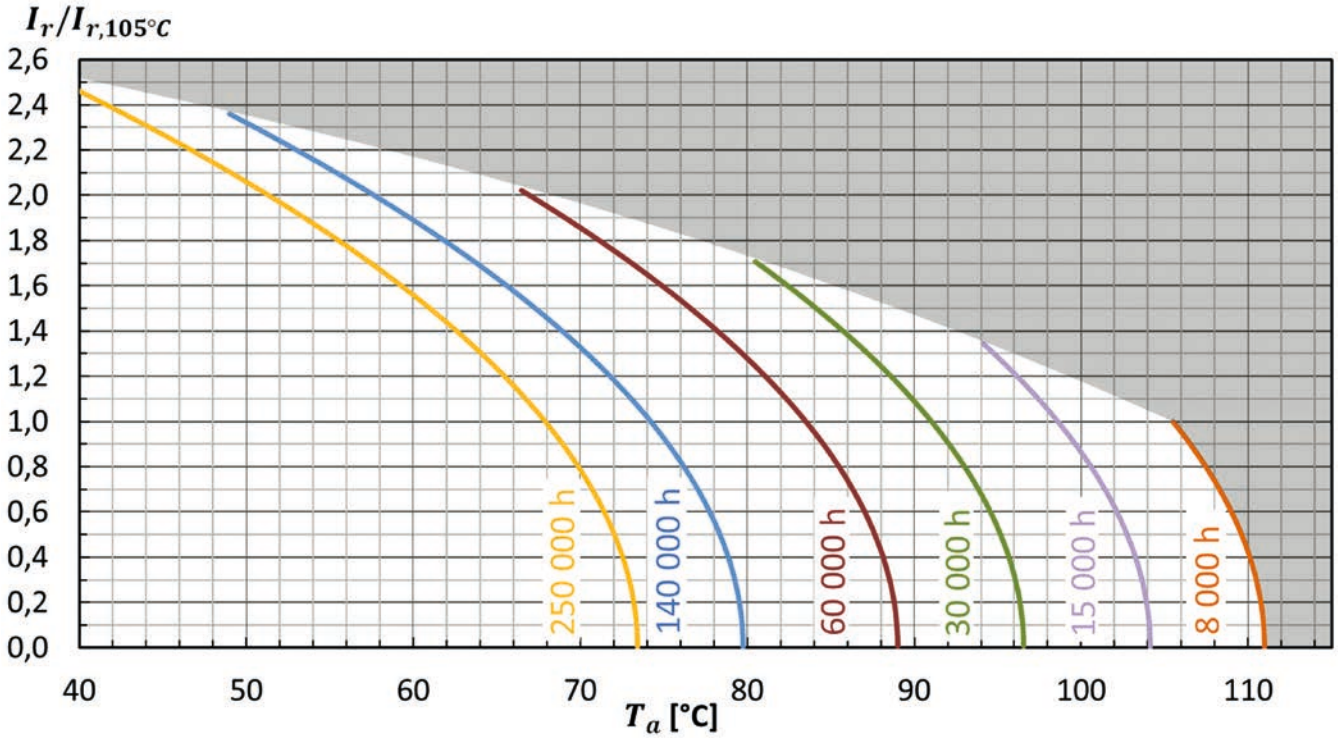

> Life Time Tests and Requirements · Anforderungen Brauchbarkeitsdauer

Life time test	Test procedure	End of Life criteria
Endurance test	T_a = 105°C; V_r, I_r applied 5000 hours	ΔC/C ≤ 20% (of initial value) Tanδ ≤ 200% (of specified value) I_L ≤ specified value
Useful life	T_a = 105°C; V_r, I_r applied 8000 hours	ΔC/C ≤ 30% (of initial value) Tanδ < 300% (of specified value) I_L ≤ specified value

Reference Specification: JIS C 5101-4, JIS C 5102, IEC 60384-4

ZR · Snap-In · 8000 h/105 °C

Higher Ripple Current · ULTRA low ESR · Compact Design

› Specifications · Spezifikationen

Items	Characteristics
Temperature range	-40°C ~ + 105°C
Capacitance tolerance (at 20°C)	Standard +/- 20%, -10%/+30% on request
Surge voltage	Repetitive max. 30 sec per 6 Minutes
Leakage current max. I_L (20°C, 5 min)	0.02 • C • V_r [µA] or 3 mA, which is smaller.
Useful life	8000 hours at 105°C
Field failure rate	0.5 FIT = 0.5 • 10^{-9} Failures/hour
Reference standards	IEC 60384-4, JIS C 5101-4
Vibration	0.75mm, 10...55Hz, 10g, 3x2h
Sleeve withstanding voltage	3000 Vac/1 min between terminals bundled and plate*
Product Compliance	RoHS, REACH, Conflict Minerals a.o. - refer to p. 14–15

* Typical value using sleeve which is free from any scratches and damages

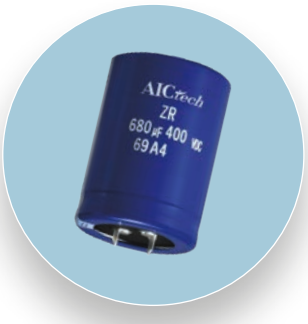

› Outline Drawings · Bauformen

Refer to page 9 for available terminal shapes and dimensions. · Auf Seite 9 finden Sie die verfügbaren Bauformen und Maße.

› Product Code · Bestellbezeichnung

Example: Series ZR · 400 V · 560 µF ± 20 % · 35 x 45 mm · 2-pin short · without plate

ZR 2G 561 M C A S6 WPEC

Type of series

Capacitance code

The first two digits are significant. The last digit indicates the number of following zeros in µF.

Terminal symbol code

R: 2-claw 6.3 mm
S: 4-claw 6.3 mm
C: 2-claw short 4.0 mm
X: 4-claw short 4.0 mm
E: 3-claw short 4.0 mm
T: 2-lugs 4.5 mm

Diameter code

Code	ØD
Y	25
Z	30
A	35
B	40

Outer design code

None: PET sleeve and PVC plate
WPEC: PET sleeve without plate

Rated voltage code

Code	Voltage
2G	400
2W	450

Capacitance tolerance

M : ± 20%
Q : -10% ~ +30%

Length Code

Code	L	Code	L
S2	25	S7	50
S3	30	S8	55
S4	35	S9	60
S5	40	S15	90
S6	45		

Rated VoltageCode (Surge Voltage) V_r [V DC]	Capacitance C_r [µF]	Ripple Current at 105°C/120Hz I_r [A RMS]	Ripple Current at 40°C/120Hz [A RMS]	ESR (typ) at 20°C/100Hz [mΩ]	Dissipation Factor at 20°C/100Hz Tan δ	DxL [mm]	Product Code # = variable value, see terminal code in the product code
400 VDC Code: 2G Surge Voltage 450 VDC	**180**	1.50	3.60	215	0.20	30x25	ZR2G181M#ZS2
	220	1.82	4.37	180	0.20	30x30	ZR2G221M#ZS3
	270	2.11	5.06	145	0.20	30x35	ZR2G271M#ZS4
		2.02	4.85	145	0.20	35x25	ZR2G271M#AS2
	330	2.43	5.83	115	0.20	30x40	ZR2G331M#ZS5
		2.35	5.64	115	0.20	35x30	ZR2G331M#AS3
	390	2.73	6.55	95	0.20	30x45	ZR2G391M#ZS6
		2.55	6.12	105	0.20	35x30	ZR2G391M#AS3
		2.67	6.41	95	0.20	35x35	ZR2G391M#AS4
	410	2.61	6.26	100	0.20	35x30	ZR2G411M#AS3
	470	3.09	7.41	80	0.20	30x50	ZR2G471M#ZS7
		2.80	12.10	95	0.20	35x31	ZR2G471M#AS3CC
		3.04	7.30	80	0.20	35x40	ZR2G471M#AS5
	560	3.43	8.23	65	0.20	35x45	ZR2G561M#AS6
	680	3.90	9.36	60	0.20	35x50	ZR2G681M#AS7
	820	4.49	10.78	50	0.20	35x60	ZR2G821M#AS9
450 VDC Code: 2W Surge Voltage 500 VDC	**150**	1.25	3.00	285	0.20	30x25	ZR2W151M#ZS2
	180	1.50	3.60	235	0.20	30x30	ZR2W181M#ZS3
	220	1.83	4.40	190	0.20	30x35	ZR2W221M#ZS4
		1.83	4.40	190	0.20	35x25	ZR2W221M#AS2
	270	2.21	5.30	150	0.20	30x40	ZR2W271M#ZS5
		2.14	5.14	150	0.20	35x30	ZR2W271M#AS3
	330	2.52	6.05	120	0.20	30x45	ZR2W331M#ZS6
		2.47	5.93	120	0.20	35x35	ZR2W331M#AS4
	390	2.83	6.80	95	0.20	30x50	ZR2W391M#ZS7
		2.68	6.43	95	0.20	35x35	ZR2W391M#AS4
		2.78	6.67	95	0.20	35x40	ZR2W391M#AS5
	470	3.16	7.58	80	0.20	35x45	ZR2W471M#AS6
	560	3.55	8.52	70	0.20	35x50	ZR2W561M#AS7
	680	4.08	9.80	60	0.20	35x56	ZR2W681M#AS8
	1 000	4.40	10.56	40	0.20	35x90	ZR2W102M#AS15

Additional designs on request · Weitere Designs auf Anfrage

› Ripple Current Multiplier · Wechselstrommultiplikator

Frequency [Hz]	50/60	120	300	1k	≥ 10k
Multiplier	0.70	1.00	1.30	1.50	1.80

Ta (°C)	40	45	50	55	60	65	70	75	80	85	90	95	100	105
Multiplier	2.4	2.4	2.3	2.2	2.1	2.0	1.8	1.7	1.6	1.5	1.4	1.2	1.1	1.0

Forced cooling – Wind speed [m/sec]	v < 0.25	v ≥ 0.25	v ≥ 0.5	v ≥ 1.0	v ≥ 2.0	v ≥ 3.0
Multiplier	1.00	1.05	1.10	1.15	1.20	1.25

› Life Time Table · Brauchbarkeitsdauer – Tabelle

ZR	Ripple Current Multiplier												
T_a	1.0	1.1	1.2	1.4	1.5	1.6	1.7	1.8	2.0	2.1	2.2	2.3	2.4
40°C	250	250	250	250	250	250	250	250	250	250	250	250	196
45°C	250	250	250	250	250	250	250	250	250	250	213	164	124
50°C	250	250	250	250	250	250	250	250	221	174	135	103	
55°C	250	250	250	250	250	250	250	219	140	110	85		
60°C	250	250	250	250	249	207	171	139	89	70			
65°C	250	250	250	187	157	131	108	88	56				
70°C	208	184	160	118	99	83	68	55					
75°C	132	116	101	75	63	52	43						
80°C	83	74	64	47	40	33							
85°C	53	46	41	30	25								
90°C	33	29	26	19									
95°C	21	19	16										
100°C	13	12											
105°C	8		khrs	Max. value limited to 250 000 hours.									

› Life Time Graph · Brauchbarkeitsdauer – Diagramm

Useful life depending on ambient temperature T_a and ripple current operating conditions I_r versus rated ripple current at the upper category temperature $I_{r,\ 105°C,120Hz}$

Brauchbarkeitsdauer in Abhängigkeit von Umgebungstemperatur T_a und Wechselstrombelastung I_r im Verhältnis zur max. Wechselstrombelastung bei oberer Kategorietemperatur $I_{r,\ 105°C,120Hz}$

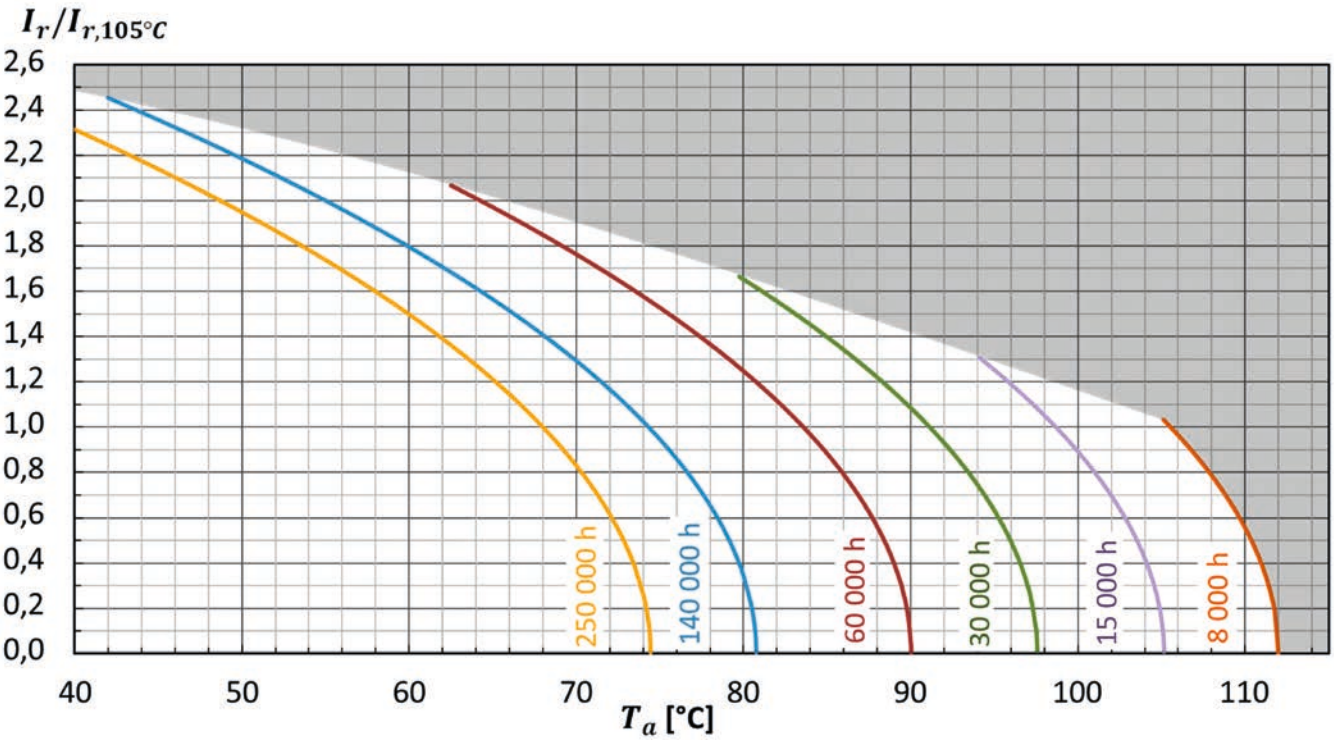

> Life Time Tests and Requirements · Anforderungen Brauchbarkeitsdauer

Life time test	Test procedure	End of Life criteria
Endurance test	T_a = 105°C; V_r, I_r applied 5000 hours	ΔC/C ≤ 20% (of initial value) Tanδ ≤ 200% (of specified value) I_L ≤ specified value
Useful life	T_a = 105°C; V_r, I_r applied 8000 hours	ΔC/C ≤ 30% (of initial value) Tanδ < 300% (of specified value) I_L ≤ specified value

Reference Specification: JIS C 5101-4, JIS C 5102, IEC 60384-4

ZR2 · Snap-In · 8000 h/105 °C

Highest Ripple Current · Side Vent · Low ESR · Compact Design

› Specifications · Spezifikationen

Items	Characteristics
Temperature range	-25°C (-40°C on request) ~ + 105°C
Capacitance tolerance (at 20°C)	Standard +/- 20%, -10%/+30% on request
Surge voltage	Repetitive max. 30 sec per 6 Minutes
Leakage current max. I_L (20°C, 5 min)	0.02 • C • V_r [µA] or 3 mA, which is smaller.
Useful life	8000 hours at 105°C
Field failure rate	0.5 FIT = 0.5 • 10^{-9} Failures/hour
Reference standards	IEC 60384-4, JIS C 5101-4
Vibration	0.75mm, 10...55Hz, 10g, 3x2h
Sleeve withstanding voltage	3000 Vac/1 min between terminals bundled and plate*
Product Compliance	RoHS, REACH, Conflict Minerals a.o. - refer to p. 14–15

* Typical value using sleeve which is free from any scratches and damages

› Outline Drawings · Bauformen

Refer to page 9 for available terminal shapes and dimensions. · Auf Seite 9 finden Sie die verfügbaren Bauformen und Maße.

› Product Code · Bestellbezeichnung

Example: Series ZR2 · 400 V · 470 µF ± 20 % · 30 x 50 mm · 2-pin short · without plate

ZR2 2G 471 M C Z S7 WPEC

Type of series

Capacitance code

The first two digits are significant. The last digit indicates the number of following zeros in µF.

Terminal symbol code

R: 2-claw 6.3 mm
S: 4-claw 6.3 mm
C: 2-claw short 4.0 mm
X: 4-claw short 4.0 mm
E: 3-claw short 4.0 mm
T: 2-lugs 4.5 mm

Diameter code

Code	ØD
Y	25
Z	30
A	35
B	40

Outer design code

None: PET sleeve and PVC plate
WPEC: PET sleeve without plate

Rated voltage code

Code	Voltage
2G	400
2W	450

Capacitance tolerance

M : ± 20%
Q : -10% ~ +30%

Length code

Code	L*	Code	L*
S2	25	S7	50
S3	30	S9	60
S4	35	S13	80
S5	40	S17	100
S6	45		

* exact lenght is mentioned in the product table

Rated VoltageCode (Surge Voltage) V_r [V DC]	Capacitance C_r [µF]	Ripple Current at 105°C/120Hz I_r [A RMS]	Ripple Current at 40°C/120Hz [A RMS]	ESR (typ) at 20°C/100Hz [mΩ]	Dissipation Factor at 20°C/100Hz Tan δ	DxL [mm]	Product Code # = variable value, see terminal code in the product code
400 VDC Code: 2G Surge Voltage 450 VDC	**220**	2.14	5.35	280	0.20	30x30	ZR22G221M#ZS3
	270	2.46	6.15	230	0.20	30x35	ZR22G271M#ZS4
	330	2.81	7.03	190	0.20	30x40	ZR22G331M#ZS5
		2.76	6.90	190	0.20	35x31	ZR22G331M#AS3
	390	3.14	7.85	160	0.20	30x45	ZR22G391M#ZS6
		3.13	7.83	160	0.20	35x36	ZR22G391M#AS4
	470	3.52	8.80	140	0.20	30x50	ZR22G471M#ZS7
		3.54	8.85	140	0.20	35x41	ZR22G471M#AS5
		3.36	8.40	140	0.20	40x30	ZR22G471M#BS3
		3.47	8.68	140	0.20	40x35	ZR22G471M#BS4
	560	3.96	9.90	115	0.20	30x60	ZR22G561M#ZS9
		3.96	9.90	115	0.20	35x46	ZR22G561M#AS6
		3.89	9.73	115	0.20	40x40	ZR22G561M#BS5
	680	4.46	11.15	115	0.20	30x70	ZR22G681M#ZS11
		4.49	11.23	95	0.20	30x75	ZR22G681M#ZS12
		4.45	11.13	95	0.20	35x51	ZR22G681M#AS7
		4.61	11.53	135	0.20	35x61	ZR22G681M#AS9
		4.38	10.95	95	0.20	40x45	ZR22G681M#BS6
	820	4.94	12.35	80	0.20	30x80	ZR22G821M#ZS13
		5.04	12.60	80	0.20	35x61	ZR22G821M#AS9
		4.89	12.23	80	0.20	40x50	ZR22G821M#BS7
	1 000	5.44	13.60	65	0.20	30x100	ZR22G102M#ZS17
		5.69	14.23	65	0.20	35x76	ZR22G102M#AS12
		5.52	13.80	65	0.20	40x61	ZR22G102M#BS9
	1 200	6.26	15.65	55	0.20	35x81	ZR22G122M#AS13
	1 500	6.96	17.40	50	0.20	35x100	ZR22G122M#AS17
	1 800	7.34	18.35	40	0.20	40x100	ZR22G182M#BS17
450 VDC Code: 2W Surge Voltage 500 VDC	**180**	1.87	4.68	350	0.20	30x30	ZR22W181M#ZS3
	220	2.15	5.38	290	0.20	30x35	ZR22W221M#ZS4
	270	2.42	6.05	230	0.20	30x40	ZR22W271M#ZS5
		2.35	5.88	230	0.20	35x31	ZR22W271M#AS3
	330	2.72	6.80	190	0.20	30x46	ZR22W331M#ZS6
		2.71	6.78	190	0.20	35x36	ZR22W331M#AS4
		2.65	6.63	190	0.20	40x30	ZR22W331M#BS3
		2.74	6.85	190	0.20	40x35	ZR22W331M#BS4
	390	3.02	7.55	170	0.20	30x50	ZR22W391M#ZS7
		3.04	7.60	170	0.20	35x41	ZR22W391M#AS5
	470	3.42	8.55	140	0.20	30x60	ZR22W471M#ZS9
		3.45	8.63	140	0.20	35x46	ZR22W471M#AS6
		3.36	8.40	140	0.20	40x40	ZR22W471M#AS5
	560	3.84	9.60	120	0.20	30x75	ZR22W561M#ZS12
		3.81	9.53	120	0.20	35x50	ZR22W561M#AS7
		3.74	9.35	120	0.20	40x45	ZR22W561M#BS6
		3.81	9.53	120	0.20	40x50	ZR22W561M#BS7

Additional designs on request · Weitere Designs auf Anfrage

Rated VoltageCode (Surge Voltage) V_r [V DC]	Capacitance C_r [µF]	Ripple Current at 105°C/120Hz I_r [A RMS]	Ripple Current at 40°C/120Hz [A RMS]	ESR (typ) at 20°C/100Hz [mΩ]	Dissipation Factor at 20°C/100Hz Tan δ	DxL [mm]	Product Code # = variable value, see terminal code in the product code
450 VDC Code: 2W Surge Voltage 500 VDC	**680**	4.25	10.63	100	0.20	30x80	ZR22W681M#ZS13
		4.33	10.83	100	0.20	35x61	ZR22W681M#AS9
	820	4.64	11.60	85	0.20	30x100	ZR22W821M#ZS17
		4.87	12.18	85	0.20	35x76	ZR22W821M#AS12
		4.88	12.20	85	0.20	35x81	ZR22W821M#AS13
		4.72	11.80	85	0.20	40x61	ZR22W821M#BS9
	1 000	5.36	13.40	70	0.20	35x100	ZR22W102M#AS17
	1 500	5.67	14.18	65	0.20	40x101	ZR22W152M#BS17
		5.39	13.48	65	0.20	46x83	ZR22W152M#HS13

Additional designs on request · Weitere Designs auf Anfrage

> Ripple Current Multiplier · Wechselstrommultiplikator

Frequency [Hz]	50/60	120	300	1k	≥ 10k
Multiplier	0.70	1.00	1.30	1.50	1.60

Ta (°C)	40	45	50	55	60	65	70	75	80	85	90	95	100	105
Multiplier	2.5	2.4	2.3	2.2	2.1	2.0	1.8	1.7	1.6	1.5	1.4	1.2	1.1	1.0

Forced cooling – Wind speed [m/sec]	v < 0.25	v ≥ 0.25	v ≥ 0.5	v ≥ 1.0	v ≥ 2.0	v ≥ 3.0
Multiplier	1.00	1.10	1.15	1.25	1.30	1.35

› Life Time Table · Brauchbarkeitsdauer – Tabelle

ZR2 400V	Ripple Current Multiplier													
T_a	1.0	1.1	1.2	1.4	1.5	1.6	1.7	1.8	2.0	2.1	2.2	2.3	2.4	2.5
40°C	250	250	250	250	250	250	250	250	250	250	210	152	108	76
45°C	250	250	250	250	250	250	250	250	244	182	133	96	68	
50°C	250	250	250	250	250	250	250	250	155	115	84	61		
55°C	250	250	250	250	250	250	219	170	98	73	53			
60°C	250	250	250	250	220	176	138	107	62	46				
65°C	250	250	250	172	139	111	88	68	39					
70°C	218	187	159	109	88	70	55	43						
75°C	138	118	100	69	56	44	35							
80°C	87	75	63	43	35	28								
85°C	55	47	40	28	22									
90°C	35	30	25	17										
95°C	22	19	16											
100°C	14	12												
105°C	8													

khrs Max. value limited to 250 000 hours.

ZR2 450V	Ripple Current Multiplier													
T_a	1.0	1.1	1.2	1.4	1.5	1.6	1.7	1.8	2.0	2.1	2.2	2.3	2.4	2.5
40°C	250	250	250	250	250	250	250	250	250	250	250	196	144	104
45°C	250	250	250	250	250	250	250	250	250	222	167	124	91	
50°C	250	250	250	250	250	250	250	250	184	140	106	78		
55°C	250	250	250	250	250	250	242	192	116	89	67			
60°C	250	250	250	250	233	190	153	121	73	56				
65°C	250	250	250	178	147	120	97	77	46					
70°C	213	185	159	113	93	76	61	49						
75°C	135	117	101	71	59	48	39							
80°C	85	74	64	45	37	30								
85°C	54	47	40	29	24									
90°C	34	30	25	18										
95°C	22	19	16											
100°C	14	12												
105°C	8													

khrs Max. value limited to 250 000 hours.

› Life Time Graph · Brauchbarkeitsdauer – Diagramm

Useful life depending on ambient temperature T_a and ripple current operating conditions I_r versus rated ripple current at the upper category temperature $I_{r,\ 105°C,120Hz}$

Brauchbarkeitsdauer in Abhängigkeit von Umgebungstemperatur T_a und Wechselstrombelastung I_r im Verhältnis zur max. Wechselstrombelastung bei oberer Kategorietemperatur $I_{r,\ 105°C,120Hz}$

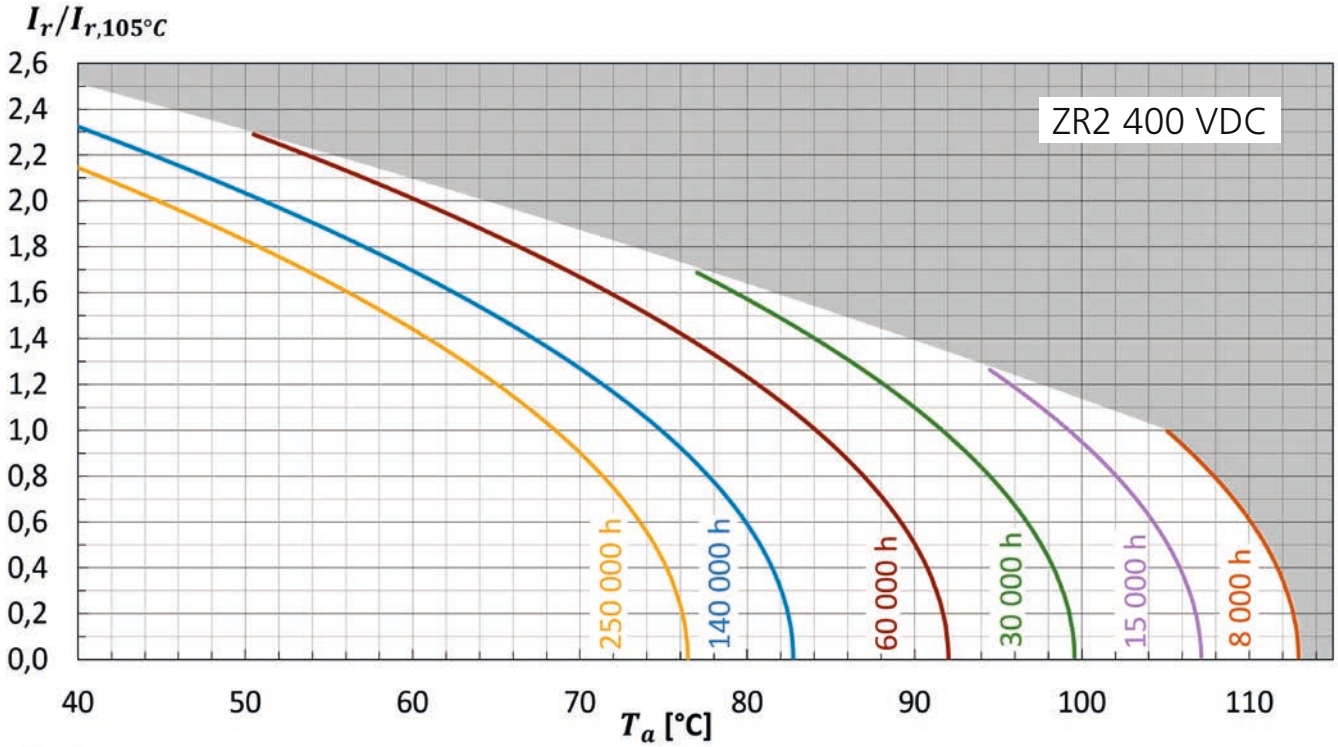

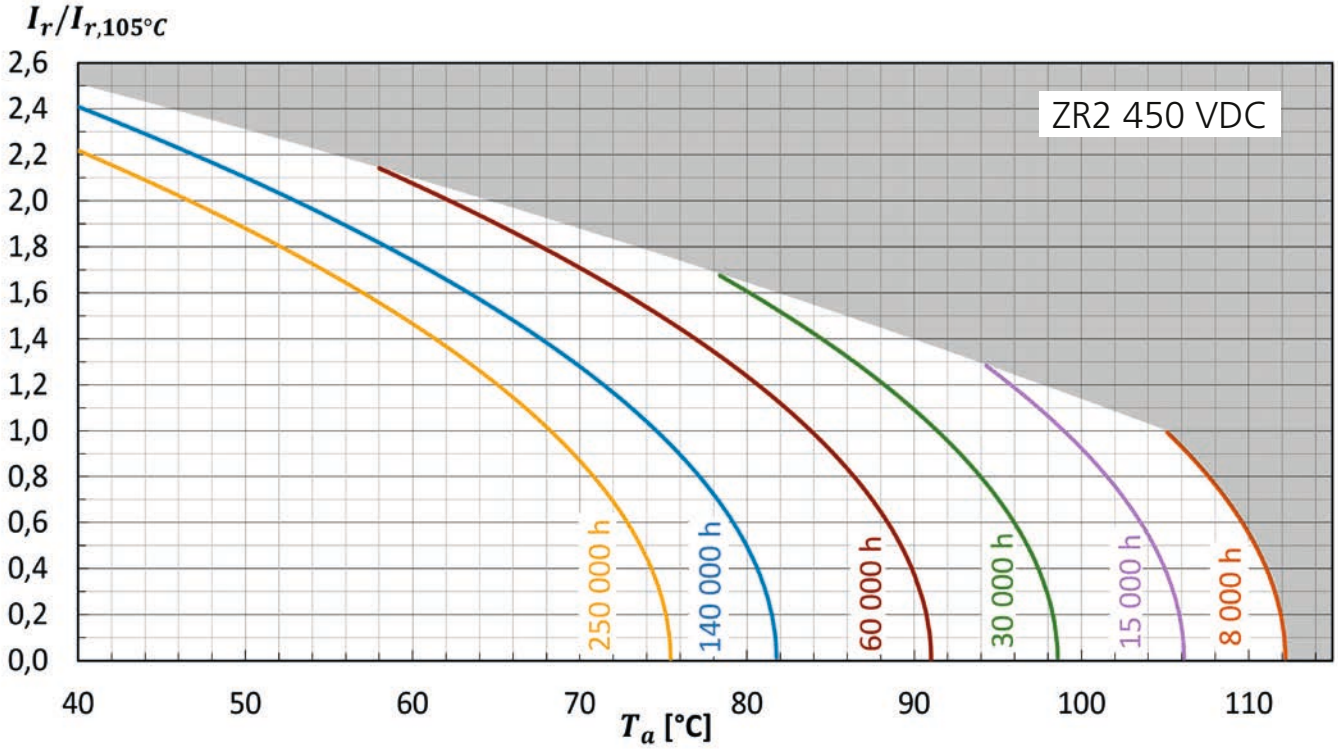

> Life Time Tests and Requirements · Anforderungen Brauchbarkeitsdauer

Life time test	Test procedure	End of Life criteria
Endurance test	T_a = 105°C; V_r, I_r applied 5000 hours	ΔC/C ≤ 20% (of initial value) Tanδ ≤ 200% (of specified value) I_L ≤ specified value
Useful life	T_a = 105°C; V_r, I_r applied 8000 hours	ΔC/C ≤ 30% (of initial value) Tanδ < 300% (of specified value) I_L ≤ specified value

Reference Specification: JIS C 5101-4, JIS C 5102, IEC 60384-4

Screw Type Series Data

VF · VFL · FX2 · FX3 · HCGW · HCGW2 · HCGW3 · FXW · FXW2
HCGF5 · VFR · VFLR · VG · VGL · HCGH · VGR · VGLR

AICtech

VF · Screw-Terminal · 6000 h/85 °C

Standard Performances · Bottom cooling design · Smaller Size

Optional design for permanent and deep charge-discharge application with high voltage hub and pulsed operation mode upon request.

Spezielles Design für häufige und tiefe Lade-, Entladeanwendungen mit hohem Spannungshub und Impulsbetrieb auf Anfrage erhältlich.

› Specifications · Spezifikationen

Items	Characteristics
Temperature range	-40°C ~ +85°C (650 VDC: -25°C ~ +85°C)
Capacitance tolerance (at 20°C)	Standard +/- 20%, -10/+30% on request
Surge voltage / Ripple voltage	Repetitive max. 30 sec per 6 Minutes / ≤ 50V
Leakage current max. I_L (20°C, 5 min)	0.01 • C • V_r [µA] or 5 mA, which is smaller.
Useful life	6000 hours at 85°C
Field failure rate	0.5 FIT = 0.5 • 10^{-9} Failures/hour
Reference standards	IEC 60384-4, JIS C 5101-4
Vibration	0.75mm, 10…55Hz, 10g, 3x2h
Outer materials	UL94-V0 / UL224-VW1 certified (cap / sleeve)
Sleeve withstanding voltage	4000 Vac / 1min between terminals bundled and plate*
Product Compliance	RoHS, REACH, Conflict Minerals a.o. – refer to p. 14–15

* Typical value

› Shape designation · Formbezeichnung

- additional information on p. 12–13 · Zusatzinformationen auf S. 12–13
- mounting accessories from p. 219 · Montagezubehör ab S. 219

Diameter 64 mm to 90 mm

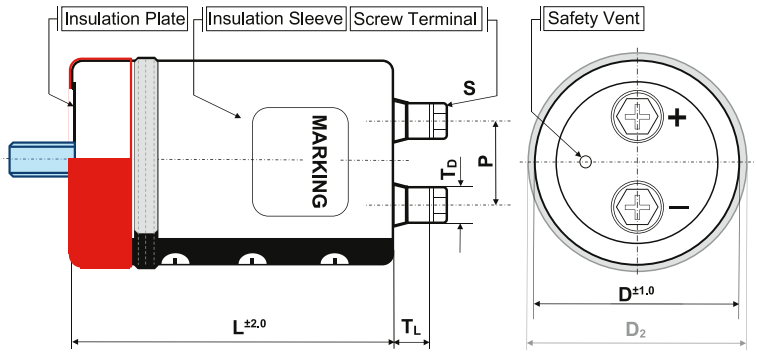

Diameter 51 mm

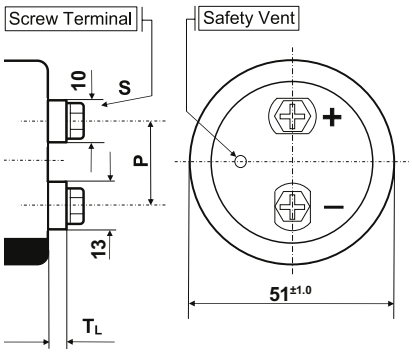

Shape code Features	B Bolt	I/Y double sleeve for 2/3 points metal Bracket	N + suffix WC blank bottom + seating ring	N standard
outer insulation sleeve	•	•	•	•
insulation plate	•	•		•
stud bolt	•			
bottom double sleeve		•		
integrated seating ring			•	

diameter code	ØD	available shape	P	S	T_L	T_D	Cap material
C	51	B, N, I, Y	22.0	M5x10	4.5	13/10	PH
D	64	B, N, I, Y	28.6	M5x10	8.0	11	PH
E	77	B, N, I, Y, WC	31.5	M5x10	8.0	11	PH
				M6x12	9.0	12	PH
F	90	B, N, I, Y, WC	31.5	M5x10	7.0	11	PH
				M6x12	8.0	12	PH

Size in mm. First listed terminal is standard.

AIC EUROPE GmbH · Sales & technical support of AIC capacitors · Telefon: +49 (0)2151-4943-5 · E-Mail: info@aic-europe.com · www.aic-europe.com

› Product Code · Bestellbezeichnung

Example: Series VF · 12000 µF +/- 20 % · 400 V · D = 90 mm · L = 126 mm with 3 points-Bracket

VF **2G** **123** **Y** **F** **126**

- **VF** – Series name
- **2G** – Rated voltage code
- **123** – Capacitance code
- **Y** – Shape code
- **F** – Diameter code
- **126** – Case length code – length in mm (3 digits)
- Capacitance tolerance: Ø : ± 20 % / Q : -10 % ~ + 30 %
- Specific features (e.g. M6 …)

Rated voltage code

Code	Voltage	Code	Voltage	Code	Voltage	Code	Voltage
0J	6.3	1H	50	2D	200	2H	500
1A	10	1J	63	2E	250	2L	550
1C	16	1K	80	2V	350	600V	600
1E	25	2A	100	2G	400	650V	650
1V	35	2C	160	2W	450		

Rated VoltageCode (Surge Voltage) V_r [V DC]	Capacitance C_r [µF]	Ripple Current at 85°C/120Hz I_r [A RMS]	Ripple Current at 40°C/120Hz [A RMS]	ESR (typ) at 20°C/100Hz [mΩ]	Zmax at 20°C/10kHz [mΩ]	ESL (typ) [nH]	Dissipation Factor at 20°C/120Hz Tan δ	DxL [mm]	Product Code # = variable value, see fixing code in the product code
6.3 VDC Code: 0J Surge Voltage 10 VDC	**330 000**	16.1	43.5	8	9	18	1.50	64x94	VF0J334#D094
	470 000	18.6	50.2	7	8	18	1.80	64x107	VF0J474#D107
	560 000	19.7	53.2	6	7	18	2.40	64x123	VF0J564#D123
		18.3	49.4	6	7	20	2.40	77x95	VF0J664#E095
	680 000	20.1	54.3	5	7	20	2.90	77x108	VF0J684#E108
10 VDC Code: 1A Surge Voltage 16 VDC	**330 000**	17.2	46.4	5	6	18	1.80	64x94	VF1A334#D094
	390 000	18.7	50.5	4	6	18	2.00	64x107	VF1A394#D107
	470 000	21.1	57.0	4	6	18	2.30	64x123	VF1A474#D123
		19.4	52.4	4	6	20	2.30	77x95	VF1A474#E095
	560 000	21.0	56.7	3	5	20	3.00	77x108	VF1A564#E108
	680 000	23.8	64.3	3	5	20	3.70	77x124	VF1A684#E124
		22.9	61.8	3	5	20	3.70	90x97	VF1A684#F097
16 VDC Code: 1C Surge Voltage 25 VDC	**270 000**	16.2	43.7	4	6	18	1.60	64x94	VF1C274#D094
	330 000	18.3	49.4	4	6	18	1.80	64x123	VF1C334#D123
		18.0	48.6	4	6	20	1.80	77x95	VF1C334#E095
	390 000	19.5	52.7	4	5	20	2.40	77x108	VF1C394#E108
	470 000	22.0	59.4	3	5	20	2.90	77x124	VF1C474#E124
		21.9	59.1	3	5	20	2.90	90x97	VF1C474#F097
	560 000	23.7	64.0	3	5	20	3.20	90x110	VF1C564#F110
25 VDC Code: 1E Surge Voltage 32 VDC	**180 000**	13.7	37.0	5	6	18	1.20	64x94	VF1E184#D094
	220 000	15.1	40.8	4	5	18	1.20	64x107	VF1E224#D107
	270 000	17.2	46.4	4	5	18	1.40	64x123	VF1E274#D123
	330 000	19.2	51.8	4	5	20	1.40	77x95	VF1E334#E095
	390 000	20.8	56.2	4	5	20	2.10	77x108	VF1E394#E108
	470 000	23.4	63.2	3	5	20	2.30	77x124	VF1E474#E124
		22.9	61.8	3	5	20	2.30	90x97	VF1E474#F097
	560 000	24.8	67.0	3	4	20	2.30	90x110	VF1E564#F110
35 VDC Code: 1V Surge Voltage 44 VDC	**120 000**	12.9	34.8	5	7	18	1.00	64x94	VF1V124#D094
	150 000	14.4	38.9	5	7	18	1.00	64x107	VF1V154#D107
	180 000	16.3	44.0	5	7	18	1.00	64x123	VF1V184#D123
		15.2	41.0	5	7	20	1.00	77x95	VF1V184#E095

Additional designs on request · Weitere Designs auf Anfrage

Rated VoltageCode (Surge Voltage) V_r [V DC]	Capacitance C_r [µF]	Ripple Current at 85°C/120Hz I_r [A RMS]	Ripple Current at 40°C/120Hz [A RMS]	ESR (typ) at 20°C/100Hz [mΩ]	Zmax at 20°C/10kHz [mΩ]	ESL (typ) [nH]	Dissipation Factor at 20°C/120Hz Tan δ	DxL [mm]	Product Code # = variable value, see fixing code in the product code
35 VDC Code: 1V Surge Voltage 44 VDC	**220 000**	16.8	45.4	5	7	20	1.20	77x108	VF1V224#E108
	270 000	19.0	51.3	4	6	20	1.20	77x124	VF1V274#E124
		18.8	50.8	4	6	20	1.20	90x97	VF1V274#F097
	330 000	20.7	55.9	4	6	20	1.80	90x110	VF1V334#F110
50 VDC Code: 1H Surge Voltage 63 VDC	**82 000**	12.1	32.7	7	8	18	0.70	64x94	VF1H823#D094
	100 000	13.4	36.2	6	7	18	0.70	64x107	VF1H104#D107
	150 000	16.8	45.4	5	7	18	0.90	64x123	VF1H154#D123
		13.9	37.5	5	7	20	0.90	77x95	VF1H154#E095
	180 000	15.2	41.0	5	6	20	1.40	77x108	VF1H184#E108
	220 000	17.2	46.4	4	6	20	1.50	77x124	VF1H224#E124
		16.5	44.6	4	6	20	1.50	90x97	VF1H224#F097
	270 000	18.2	49.1	3	5	20	1.50	90x110	VF1H274#F110
63 VDC Code: 1J Surge Voltage 80 VDC	**56 000**	13.3	35.9	8	9	18	0.50	64x94	VF1J563#D094
	68 000	14.6	39.4	7	8	18	0.50	64x107	VF1J683#D107
	82 000	16.5	44.6	7	8	18	0.70	64x123	VF1J823#D123
	100 000	15.5	41.9	7	8	20	0.70	77x95	VF1J104#E095
	120 000	16.9	45.6	6	7	20	1.10	77x108	VF1J124#E108
	150 000	19.3	52.1	6	7	20	1.20	77x124	VF1J154#E124
		18.3	49.4	6	7	20	1.20	90x97	VF1J154#F097
	180 000	19.9	53.7	5	6	20	1.20	90x110	VF1J184#F110
80 VDC Code: 1K Surge Voltage 100 VDC	**39 000**	12.8	34.6	6	7	18	0.35	64x94	VF1K393#D094
	47 000	14.0	37.8	6	7	18	0.35	64x107	VF1K473#D107
	56 000	15.7	42.4	5	7	18	0.40	64x123	VF1K563#D123
		15.3	41.3	5	7	20	0.40	77x95	VF1K563#E095
	68 000	16.8	45.4	4	7	20	0.40	77x108	VF1K683#E108
	82 000	18.9	51.0	3	6	20	0.60	77x124	VF1K823#E124
		18.1	48.9	3	6	20	0.60	90x97	VF1K823#F097
	100 000	19.8	53.5	3	6	20	0.70	90x110	VF1K104#F110
100 VDC Code: 2A Surge Voltage 125 VDC	**22 000**	9.6	25.9	8	9	18	0.20	64x94	VF2A223#D094
	33 000	11.7	31.6	6	7	18	0.25	64x107	VF2A333#D107
	39 000	13.1	35.4	5	7	18	0.30	64x123	VF2A393#D123
		12.8	34.6	5	7	20	0.30	77x95	VF2A393#E095
	47 000	14.0	37.8	5	7	20	0.30	77x108	VF2A473#E108
	56 000	15.6	42.1	4	6	20	0.45	77x124	VF2A563#E124
		15.8	42.7	4	6	20	0.45	90x97	VF2A563#F097
	68 000	17.3	46.7	4	6	20	0.50	90x110	VF2A683#F110
	100 000	20.9	56.4	3	5	20	0.45	77x165	VF2A104#E165
		22.9	61.8	3	5	20	0.45	90x190	VF2A104#F190
160 VDC Code: 2C Surge Voltage 200 VDC	**12 000**	12.3	33.2	12	15	18	0.25	64x94	VF2C123#D094
	15 000	13.7	37.0	11	12	18	0.25	64x107	VF2C153#D107
		15.8	42.7	11	12	18	0.25	77x95	VF2C153#E095
	18 000	15.4	41.6	9	11	18	0.25	64x123	VF2C183#D123
		17.4	47.0	9	11	20	0.25	77x95	VF2C183#E095
	22 000	16.8	45.4	8	8	18	0.25	64x147	VF2C223#D147
		19.1	51.6	8	8	20	0.25	77x108	VF2C223#E108

Additional designs on request · Weitere Designs auf Anfrage

Rated VoltageCode (Surge Voltage) V_r [V DC]	Capacitance C_r [µF]	Ripple Current at 85°C/120Hz I_r [A RMS]	Ripple Current at 40°C/120Hz [A RMS]	ESR (typ) at 20°C/100Hz [mΩ]	Zmax at 20°C/10kHz [mΩ]	ESL (typ) [nH]	Dissipation Factor at 20°C/120Hz Tan δ	DxL [mm]	Product Code # = variable value, see fixing code in the product code
160 VDC Code: 2C Surge Voltage 200 VDC	**27 000**	21.7	58.6	7	8	20	0.25	77x124	VF2C273#E124
		24.6	66.4	7	8	20	0.25	90x97	VF2C273#F097
	33 000	23.5	63.5	6	7	20	0.25	77x148	VF2C333#E148
		27.0	72.9	6	7	20	0.25	90x110	VF2C333#F110
	39 000	29.1	78.6	5	7	20	0.25	90x126	VF2C393#F126
200 VDC Code: 2D Surge Voltage 250 VDC	**12 000**	12.3	33.2	12	14	18	0.25	64x94	VF2D123#D094
	15 000	14.1	38.1	10	13	18	0.25	64x123	VF2D153#D123
		15.8	42.7	10	13	20	0.25	77x95	VF2D153#E095
	18 000	15.2	41.0	8	12	18	0.25	64x147	VF2D183#D147
		17.3	46.7	8	12	20	0.25	77x108	VF2D183#E108
	22 000	19.6	52.9	7	7	20	0.25	77x124	VF2D223#E124
		22.2	59.9	7	7	20	0.25	90x97	VF2D223#F097
	27 000	21.3	57.5	6	7	20	0.25	77x148	VF2D273#E148
		24.4	65.9	6	7	20	0.25	90x110	VF2D273#F110
	33 000	26.7	72.1	5	7	20	0.25	90x126	VF2D333#F126
	35 000	24.7	66.7	5	7	20	0.25	77x165	VF2D353#E165
	43 000	30.4	82.1	4	6	20	0.25	90x150	VF2D433#F150
250 VDC Code: 2E Surge Voltage 300 VDC	**8 200**	10.2	27.5	15	16	18	0.25	64x94	VF2E822#D94
	10 000	11.5	31.1	12	14	18	0.25	64x123	VF2E103#D123
	12 000	12.4	33.5	10	11	18	0.25	64x147	VF2E123#D147
		14.2	38.3	10	11	20	0.25	77x95	VF2E123#E095
	15 000	16.2	43.7	8	11	20	0.25	77x124	VF2E153#E124
		18.3	49.4	8	11	20	0.25	90x97	VF2E153#F097
	18 000	17.4	47.0	7	10	20	0.25	77x148	VF2E183#E148
		19.9	53.7	7	10	20	0.25	90x110	VF2E183#F110
	22 000	21.8	58.9	6	8	20	0.25	90x126	VF2E223#F126
	26 000	23.6	63.7	5	6	20	0.25	90x150	VF2E263#F150
350 VDC Code: 2V Surge Voltage 400 VDC	**1 800**	7.4	15.6	55	58	17	0.20	51x75	VF2V182#C075
	2 200	8.5	17.9	45	47	17	0.20	51x96	VF2V222#C096
	2 700	9.8	20.6	37	39	17	0.20	51x109	VF2V272#C109
	3 300	11.2	23.6	30	32	17	0.20	51x125	VF2V332#C125
		12.6	26.5	30	32	17	0.20	64x94	VF2V332#D094
	4 700	15.1	31.7	21	22	18	0.20	64x94	VF2V472#D094
	5 600	16.4	34.4	18	19	18	0.20	64x107	VF2V562#D107
	6 800	18.6	39.1	15	15	18	0.20	64x123	VF2V682#D123
		20.9	43.9	15	15	20	0.20	77x95	VF2V682#E095
	8 200	20.1	42.2	12	15	18	0.20	64x147	VF2V822#D147
		22.9	48.1	12	15	20	0.20	77x108	VF2V822#E108
	10 000	22.9	48.1	10	15	18	0.20	64x187	VF2V103#D187
		25.9	54.4	10	15	20	0.20	77x124	VF2V103#E124
		29.3	61.5	10	15	20	0.20	90x97	VF2V103#F097
	12 000	27.8	58.4	8	13	20	0.20	77x148	VF2V123#E148
		31.7	66.6	8	13	20	0.20	90x126	VF2V123#F126
	15 000	31.9	67.0	7	10	20	0.20	77x188	VF2V153#E188
		35.2	73.9	7	10	20	0.20	90x150	VF2V153#F150

Additional designs on request · Weitere Designs auf Anfrage

Rated VoltageCode (Surge Voltage) V_r [V DC]	Capacitance C_r [µF]	Ripple Current at 85°C/120Hz I_r [A RMS]	Ripple Current at 40°C/120Hz [A RMS]	ESR (typ) at 20°C/100Hz [mΩ]	Zmax at 20°C/10kHz [mΩ]	ESL (typ) [nH]	Dissipation Factor at 20°C/120Hz Tan δ	DxL [mm]	Product Code # = variable value, see fixing code in the product code
350 VDC Code: 2V Surge Voltage 400 VDC	**18 000**	36.0	75.6	7	10	20	0.20	77x228	VF2V183#E228
		37.9	79.6	7	10	20	0.20	90x167	VF2V183#F167
	22 000	41.1	86.3	6	9	20	0.20	90x230	VF2V223#F230
	26 000	47.1	98.9	5	7	20	0.20	90x230	VF2V263#F230
	27 000	44.9	94.3	5	7	20	0.20	90x268	VF2V273#F268
	30 000	47.9	100.6	4	6	20	0.20	90x230	VF2V303#F230
400 VDC Code: 2G Surge Voltage 450 VDC	**1 500**	6.8	14.3	68	73	17	0.20	51x75	VF2G152#C075
	2 200	8.5	17.9	47	50	17	0.20	51x96	VF2G222#C096
	2 700	9.8	20.6	38	41	17	0.20	51x109	VF2G272#C109
	3 300	11.2	23.4	31	34	17	0.20	51x125	VF2G332#C125
	3 900	13.7	28.8	26	28	18	0.20	64x94	VF2G392#D094
	4 700	15.0	31.5	21	22	18	0.20	64x107	VF2G472#D107
		17.4	36.5	21	22	20	0.20	77x95	VF2G472#E095
	5 600	16.9	35.5	18	19	18	0.20	64x123	VF2G562#D123
		19.0	39.9	18	19	20	0.20	77x95	VF2G562#E095
	6 800	18.3	38.4	15	15	18	0.20	64x147	VF2G682#D147
		20.8	43.7	15	15	20	0.20	77x108	VF2G682#E108
		21.4	44.9	15	15	20	0.20	77x124	VF2G682#E124
	8 200	20.8	43.7	12	15	18	0.20	64x187	VF2G822#D187
		23.5	49.4	12	15	20	0.20	77x124	VF2G822#E124
		26.6	55.9	12	15	20	0.20	90x97	VF2G822#F097
	9 000	24.0	40.8	10	15	20	0.20	77x148	VF2G902#E148
	10 000	25.4	53.3	10	15	20	0.20	77x148	VF2G103#E148
		29.1	61.1	10	15	20	0.20	90x110	VF2G103#F110
	12 000	28.5	59.9	8	13	20	0.20	77x188	VF2G123#E188
		31.7	66.6	8	13	20	0.20	90x126	VF2G123#F126
	15 000	32.9	69.1	8	10	20	0.20	77x228	VF2G153#E228
		34.6	72.7	8	10	20	0.20	90x167	VF2G153#F167
	18 000	38.6	81.1	6	9	20	0.20	90x150	VF2G183#F150
		38.2	80.2	6	9	20	0.20	90x190	VF2G183#F190
	20 000	37.9	79.6	6	9	20	0.20	77x228	VF2G203#E228
	22 000	42.2	88.6	5	7	20	0.20	90x190	VF2G223#F190
		41.1	86.3	5	7	20	0.20	90x230	VF2G223#F230
	25 000	43.8	92.0	5	7	20	0.20	90x230	VF2G253#F230
	29 000	47.1	98.9	4	6	20	0.20	90x230	VF2G293#F230S
	34 000	54.4	114.2*	4	6	20	0.20	90x268	VF2G343#F268
450 VDC Code: 2W Surge Voltage 500 VDC	**1 000**	6.1	12.1	105	110	17	0.20	51x96	VF2W102#C096
	1 200	6.3	13.3	86	90	17	0.20	51x75	VF2W122#C075
	1 500	7.5	15.8	69	72	17	0.20	51x96	VF2W152#C096
	1 800	8.4	17.7	57	60	17	0.20	51x109	VF2W182#C109
	2 200	9.4	19.8	47	50	17	0.20	51x125	VF2W222#C125
	2 700	11.7	24.6	38	40	18	0.20	64x94	VF2W272#D094
	3 300	12.9	27.1	30	35	18	0.20	64x107	VF2W332#D107
	3 900	14.5	30.5	27	32	18	0.20	64x123	VF2W392#D123
		16.2	34.0	27	32	20	0.20	77x95	VF2W392#E095
	4 700	17.8	37.4	21	21	20	0.20	77x108	VF2W472#E108

Additional designs on request · Weitere Designs auf Anfrage

Rated VoltageCode (Surge Voltage) V_r [V DC]	Capacitance C_r [µF]	Ripple Current at 85°C/120Hz I_r [A RMS]	Ripple Current at 40°C/120Hz [A RMS]	ESR (typ) at 20°C/100Hz [mΩ]	Zmax at 20°C/10kHz [mΩ]	ESL (typ) [nH]	Dissipation Factor at 20°C/120Hz Tan δ	DxL [mm]	Product Code # = variable value, see fixing code in the product code
450 VDC Code: 2W Surge Voltage 500 VDC	**5 600**	17.0	35.7	20	20	18	0.20	64x147	VF2W562#D147
		19.9	41.8	20	20	20	0.20	77x124	VF2W562#E124
		22.5	47.3	20	20	20	0.20	90x97	VF2W562#F097
	6 200	20.4	42.8	17	19	20	0.20	77x108	VF2W622#E108
	6 800	19.4	40.7	15	18	18	0.20	64x187	VF2W682#D187
		21.4	44.9	15	18	20	0.20	77x148	VF2W682#E148
		24.6	51.7	15	18	20	0.20	90x110	VF2W682#F110
	8 200	24.0	50.4	14	16	20	0.20	77x165	VF2W822#E165
		26.8	56.3	14	16	20	0.20	90x126	VF2W822#F126
	10 000	25.9	54.4	10	15	20	0.20	77x148	VF2W103#E148R
		26.7	56.1	10	15	20	0.20	77x188	VF2W103#E188
		29.4	61.7	10	15	20	0.20	90x150	VF2W103#F150
	12 000	29.2	61.3	9	12	20	0.15	77x188	VF2W123#E188
		30.2	63.4	9	12	20	0.20	77x228	VF2W123#E228
		31.7	66.6	9	12	20	0.20	90x167	VF2W123#F167
	15 000	35.7	75.0	7	10	20	0.20	90x190	VF2W153#F190
	18 000	38.1	80.0	6	9	20	0.20	90x230	VF2W183#F230
	20 000	40.1	84.2	6	8	20	0.20	90x230	VF2W203#F230
	22 000	41.6	87.4	5	7	20	0.20	90x268	VF2W223#F268
500 VDC Code: 2H Surge Voltage 550 VDC	**820**	4.7	9.9	117	110	17	0.20	51x75	VF2H821#C075
	1 000	5.2	10.9	96	90	17	0.20	51x75	VF2H102#C075
	1 200	6.0	12.6	80	75	17	0.20	51x96	VF2H122#C096
	1 500	6.9	14.5	64	60	17	0.20	51x109	VF2H152#C109
	1 800	7.7	16.2	53	50	18	0.20	51x125	VF2H182#C125
		9.1	19.1	53	50	18	0.20	64x94	VF2H182#D094
	2 200	10.0	21.0	40	35	18	0.20	64x94	VF2H222#D094
	2 700	11.1	23.3	37	33	18	0.20	64x107	VF2H272#D107
		12.9	27.1	37	33	20	0.20	77x95	VF2H272#E095
	3 300	12.6	26.5	36	32	18	0.20	64x123	VF2H332#D123
		15.4	32.3	36	32	20	0.20	77x108	VF2H332#E108
	3 900	13.5	28.4	27	29	18	0.20	64x147	VF2H392#D147
		15.4	32.3	27	29	20	0.20	77x108	VF2H392#E108
		17.9	37.6	27	29	20	0.20	90x97	VF2H392#F097
	4 700	15.2	31.9	25	25	20	0.20	64x164	VF2H472#E124
		17.3	36.3	25	25	20	0.20	77x124	VF2H472#E124
		19.6	41.2	25	25	20	0.20	90x97	VF2H472#F097
	5 600	16.8	35.3	25	25	20	0.20	64x187	VF2H562#D187
		18.6	39.1	23	21	20	0.20	77x148	VF2H562#E148
		21.3	44.7	23	21	20	0.20	90x110	VF2H562#F110
	6 800	20.8	43.7	20	18	20	0.20	77x165	VF2H682#E165
		23.3	48.9	20	18	20	0.20	90x126	VF2H682#F126
	8 200	23.0	48.3	17	16	20	0.20	77x188	VF2H822#E188
		25.4	53.3	17	16	20	0.20	90x150	VF2H822#F150

Additional designs on request · Weitere Designs auf Anfrage

Rated VoltageCode (Surge Voltage) V_r [V DC]	Capacitance C_r [µF]	Ripple Current at 85°C/120Hz I_r [A RMS]	Ripple Current at 40°C/120Hz [A RMS]	ESR (typ) at 20°C/100Hz [mΩ]	Zmax at 20°C/10kHz [mΩ]	ESL (typ) [nH]	Dissipation Factor at 20°C/120Hz Tan δ	DxL [mm]	Product Code # = variable value, see fixing code in the product code
500 VDC Code: 2H Surge Voltage 550 VDC	**10 000**	27.6	58.0	14	16	20	0.20	90x167	VF2H103#F167
	12 000	30,4	63.8	12	14	20	0.20	90x190	VF2H123#F190
	14 000	31.9	67.0	11	12	20	0.20	90x230	VF2H143#F230
	18 000	34.4	72.2	8	10	20	0.20	90x268	VF2H183#F268
550 VDC Code: 2L Surge Voltage 600 VDC	**560**	3.9	8.2	200	215	17	0.20	51x75	VF2L561#C075
	680	4.2	8.8	165	177	17	0.20	51x75	VF2L681#C075
	820	5.0	10.5	137	147	17	0.20	51x96	VF2L821#C096
	1 000	5.6	11.8	112	120	17	0.20	51x109	VF2L102#C109
	1 200	6.4	13.4	93	100	17	0.20	51x125	VF2L122#C125
		7.2	15.1	93	100	18	0.20	64x94	VF2L122#D094
	1 500	8.1	17.0	74	80	18	0.20	64x94	VF2L152#D094
	1 800	8.9	18.7	61	50	18	0.20	64x107	VF2L182#D107
		10.3	21.6	61	50	20	0.20	77x95	VF2L182#E095
	2 200	10.1	21.2	53	50	18	0.20	64x123	VF2L222#D123
		11.4	23.9	53	50	20	0.20	77x95	VF2L222#E095
	2 700	11.0	23.1	40	35	18	0.20	64x147	VF2L272#D147
		12.5	26.3	40	35	20	0.20	77x108	VF2L272#E108
		14.5	30.5	40	35	20	0.20	90x97	VF2L272#F097
	3 300	12.5	26.3	38	32	18	0.20	64x164	VF2L332#D164
		14.2	29.8	38	32	20	0.20	77x124	VF2L332#E124
		16.1	33.8	38	32	20	0.20	90x97	VF2L332#F097
	3 900	13.7	28.8	30	27	18	0.20	64x187	VF2L392#D187
		15.4	32.3	30	27	20	0.20	77x124	VF2L392#E124
		17.4	36.5	30	27	20	0.20	90x110	VF2L392#F110
	4 700	16.9	35.5	25	20	20	0.20	77x165	VF2L472#E165
		18.9	39.7	25	20	20	0.20	90x126	VF2L472#F126
	5 600	18.6	39.1	20	17	20	0.20	77x188	VF2L562#E188
		20.5	43.1	20	17	20	0.20	90x150	VF2L562#F150
	6 800	21.2	44.5	17	17	20	0.20	77x228	VF2L682#E228
		22.2	46.6	17	17	20	0.20	90x167	VF2L682#F167
	8 200	24.6	51.7	14	14	20	0.20	90x190	VF2L822#F190
	10 000	26.5	55.7	12	12	20	0.20	90x230	VF2L103#F230
	12 000	27.4	57.5	10	10	20	0.20	90x268	VF2L123#F268
600 VDC Code: 600V Surge Voltage 650 VDC	**560**	2.9	6.1	225	169	17	0.20	51x75	VF600V561#C075
	680	3.4	7.2	186	139	17	0.20	51x96	VF600V681#C096
	820	3.9	8.2	154	116	17	0.20	51x109	VF600V821#C109
	1 000	4.4	9.3	126	95	17	0.20	51x125	VF600V102#C125
	1 500	8.7	18.3	84	63	18	0.20	64x107	VF600V152#D107
	1 800	9.8	20.6	70	53	18	0.20	64x123	VF600V182#D123
		11.0	23.1	70	53	20	0.20	77x95	VF600V182#E095
	2 200	10.6	22.3	58	44	18	0.20	64x147	VF600V222#D147
		12.1	25.4	58	44	20	0.20	77x108	VF600V222#E108
	2 700	12.1	25.4	47	35	18	0.20	64x164	VF600V272#D164
		13.8	29.0	47	35	20	0.20	77x124	VF600V272#E124

Additional designs on request · Weitere Designs auf Anfrage

Rated VoltageCode (Surge Voltage) V_r [V DC]	Capacitance C_r [µF]	Ripple Current at 85°C/120Hz I_r [A RMS]	Ripple Current at 40°C/120Hz [A RMS]	ESR (typ) at 20°C/100Hz [mΩ]	Zmax at 20°C/10kHz [mΩ]	ESL (typ) [nH]	Dissipation Factor at 20°C/120Hz Tan δ	DxL [mm]	Product Code # = variable value, see fixing code in the product code
600 VDC Code: 600V Surge Voltage 650 VDC	**2 700**	15.6	32.8	47	35	20	0.20	90x97	VF600V272#F097
	3 300	13.5	28.4	39	29	18	0.20	64x187	VF600V332#D187
		14.9	31.3	39	29	20	0.20	77x148	VF600V332#E148
		17.1	35.9	39	29	20	0.20	90x110	VF600V332#F110
	3 900	16.5	34.7	33	25	20	0.20	77x165	VF600V392#E165
		18.5	38.9	33	25	20	0.20	90x126	VF600V392#F126
	4 700	18.3	38.4	27	20	20	0.20	77x188	VF600V472#E188
		20.2	42.4	27	20	20	0.20	90x150	VF600V472#F150
	5 600	20.6	43.3	23	17	20	0.20	77x228	VF600V562#E228
		21.6	45.4	23	17	20	0.20	90x167	VF600V562#F167
	6 800	23.4	49.1	19	14	20	0.20	90x230	VF600V682#F230
650 VDC Code: 650V Surge Voltage 700 VDC	**820**	6.3	13.3	157	118	18	0.20	64x94	VF650V821#D094
	1 000	6.9	14.5	129	97	18	0.20	64x107	VF650V102#D107
	1 200	7.8	16.4	107	81	18	0.20	64x123	VF650V122#D123
		8.8	18.5	107	81	20	0.20	77x95	VF650V122#E095
	1 500	8.6	18.1	86	65	18	0.20	64x147	VF650V152#D147
		9.8	20.6	86	65	20	0.20	77x108	VF650V152#E108
		11.3	23.8	86	65	20	0.20	90x97	VF650V152#F097
	1 800	11.0	23.1	71	54	20	0.20	77x124	VF650V182#E124
		12.3	25.8	71	54	20	0.20	90x110	VF650V182#F110
	2 200	11.9	25.0	58	44	20	0.20	77x148	VF650V222#E148
		13.5	28.4	58	44	20	0.20	90x126	VF650V222#F126
	3 300	16.4	34.4	39	32	20	0.20	90x150	VF650V332#F150

* Please contact us if load condition exceeds terminals related $I_{r\,max}$ referred on page 13

Additional designs on request · Weitere Designs auf Anfrage

› Ripple Current Multiplier · Wechselstrommultiplikator

Frequency [Hz]	50/60	120	300	1k	≥ 10k
Multiplier	0.80	1.00	1.18	1.34	1.45

Ta (°C)	40	45	50	55	60	65	70	75	80	85
Multiplier 6.3-100VDC	2.7	2.6	2.4	2.3	2.2	2.0	1.7	1.4	1.2	1.0
Multiplier 160-250VDC	2.7	2.5	2.3	2.2	2.1	1.9	1.6	1.3	1.1	1.0
Multiplier 350-650VDC	2.1	2.0	1.9	1.8	1.7	1.5	1.3	1.2	1.1	1.0

Forced cooling – Wind speed [m/sec]	v < 0.25	v ≥ 0.25	v ≥ 0.5	v ≥ 1.0	v ≥ 2.0	v ≥ 3.0
Multiplier	1.00	1.07	1.15	1.25	1.30	1.35

› Life Time Table · Brauchbarkeitsdauer – Tabelle

VF 6.3-100VDC	Useful life as function of ambient temperature and ripple current											
I_r at 85°C	x 1.0	x 1.1	x 1.2	x 1.3	x 1.4	x 1.5	x 1.7	x 2.0	x 2.2	x 2.4	x 2.6	x 2.7
T_a = 40°C	250	250	250	250	250	250	241	178	141	109	83	72
T_a = 45°C	250	242	227	212	197	182	152	112	89	69	52	
T_a = 50°C	162	153	143	134	124	115	96	71	56	43		
T_a = 55°C	102	96	91	84	78	72	61	45	35			
T_a = 60°C	64	61	57	53	49	46	38	28	22			
T_a = 65°C	41	38	36	33	31	29	24	18				
T_a = 70°C	25	24	23	21	19	18	15					
T_a = 75°C	16	15	14	13	12							
T_a = 80°C	10	9	9									
T_a = 85°C	6				khrs	Max. value limited to 250 000 hours.						

VF 160-250VDC	Useful life as function of ambient temperature and ripple current											
I_r at 85°C	x 1.0	x 1.1	x 1.2	x 1.3	x 1.4	x 1.5	x 1.7	x 1.9	x 2.1	x 2.3	x 2.5	x 2.7
T_a = 40°C	250	250	250	250	250	250	203	156	116	84	59	40
T_a = 45°C	250	237	218	199	180	162	128	98	73	53	37	
T_a = 50°C	162	150	138	126	114	102	81	62	46	33		
T_a = 55°C	102	95	87	79	72	64	51	39	29			
T_a = 60°C	64	60	55	50	45	41	32	24	18			
T_a = 65°C	41	38	34	31	28	25	20	15				
T_a = 70°C	25	24	22	20	18	16						
T_a = 75°C	16	15	13	12								
T_a = 80°C	10	9										
T_a = 85°C	6				khrs	Max. value limited to 250 000 hours.						

VF 350-650VDC	Useful life as function of ambient temperature and ripple current											
I_r at 85°C	x 1.0	x 1.1	x 1.2	x 1.3	x 1.4	x 1.5	x 1.6	x 1.7	x 1.8	x 1.9	x 2.0	x 2.1
T_a = 40°C	250	250	250	246	204	166	134	106	83	64	48	36
T_a = 45°C	250	218	186	156	129	105	84	67	52	40	30	
T_a = 50°C	160	138	117	98	81	66	53	42	33	25		
T_a = 55°C	101	87	74	62	51	42	33	26	21			
T_a = 60°C	64	55	47	39	32	26	21	17				
T_a = 65°C	40	34	29	24	20	16						
T_a = 70°C	25	22	18	15								
T_a = 75°C	16	13	11									
T_a = 80°C	10	8										
T_a = 85°C	6				khrs	Max. value limited to 250 000 hours.						

› Life Time Graph · Brauchbarkeitsdauer – Diagramm

Useful life depending on ambient temperature T_a and ripple current operating conditions I_r versus rated ripple current at the upper category temperature $I_{r,\ 85°C,120Hz}$

Brauchbarkeitsdauer in Abhängigkeit von Umgebungstemperatur T_a und Wechselstrombelastung I_r im Verhältnis zur max. Wechselstrombelastung bei oberer Kategorietemperatur $I_{r,\ 85°C,120Hz}$

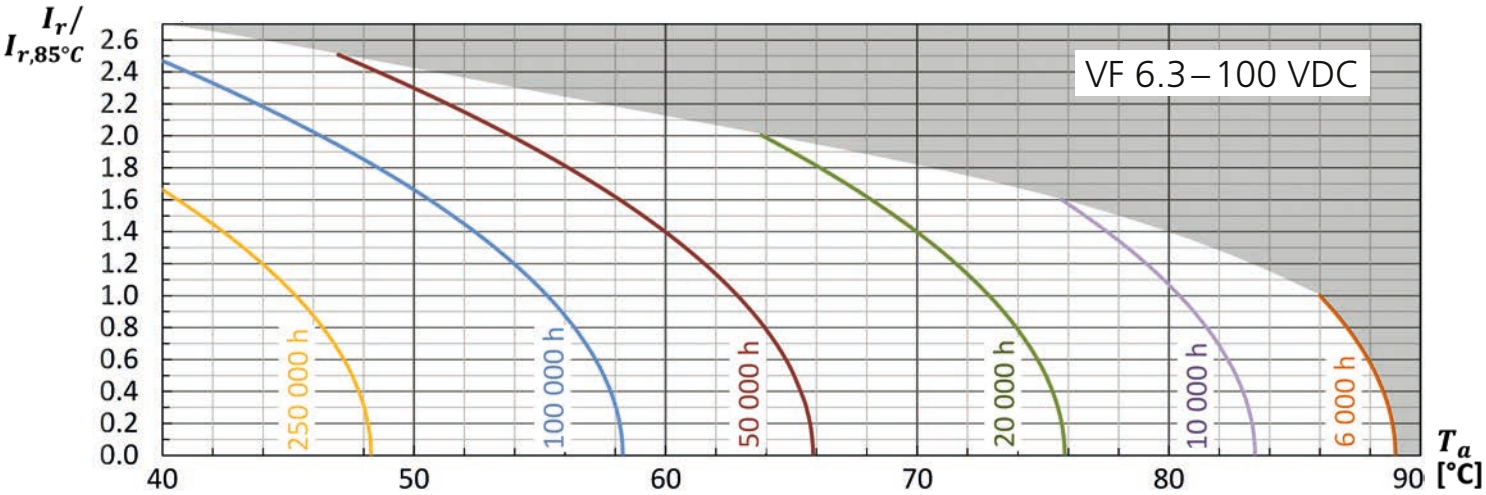

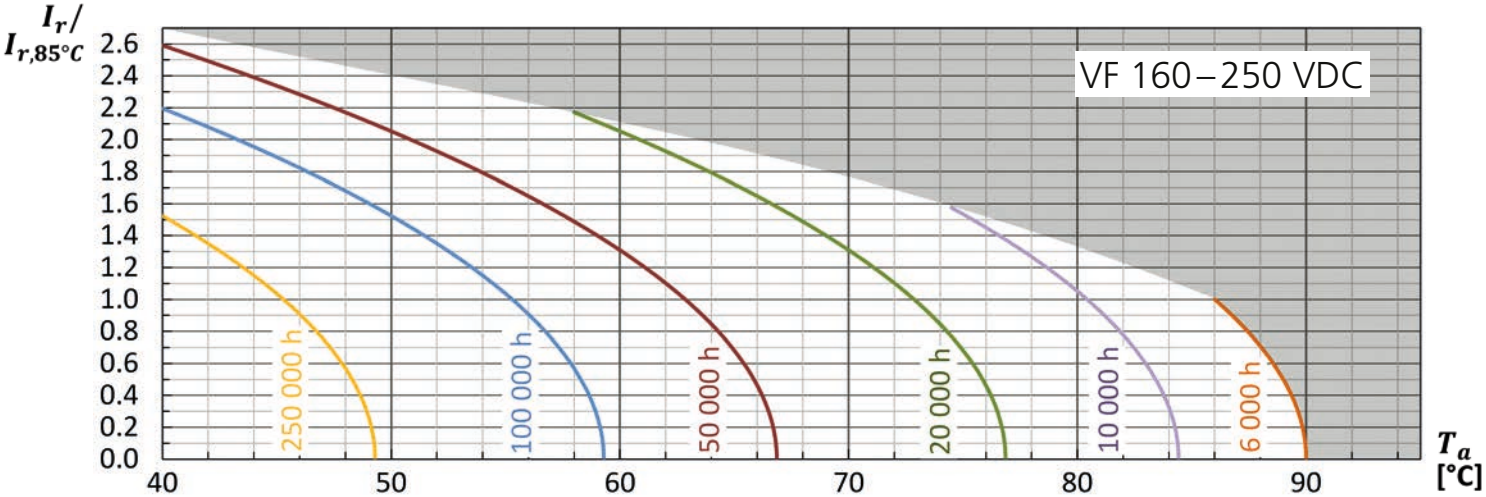

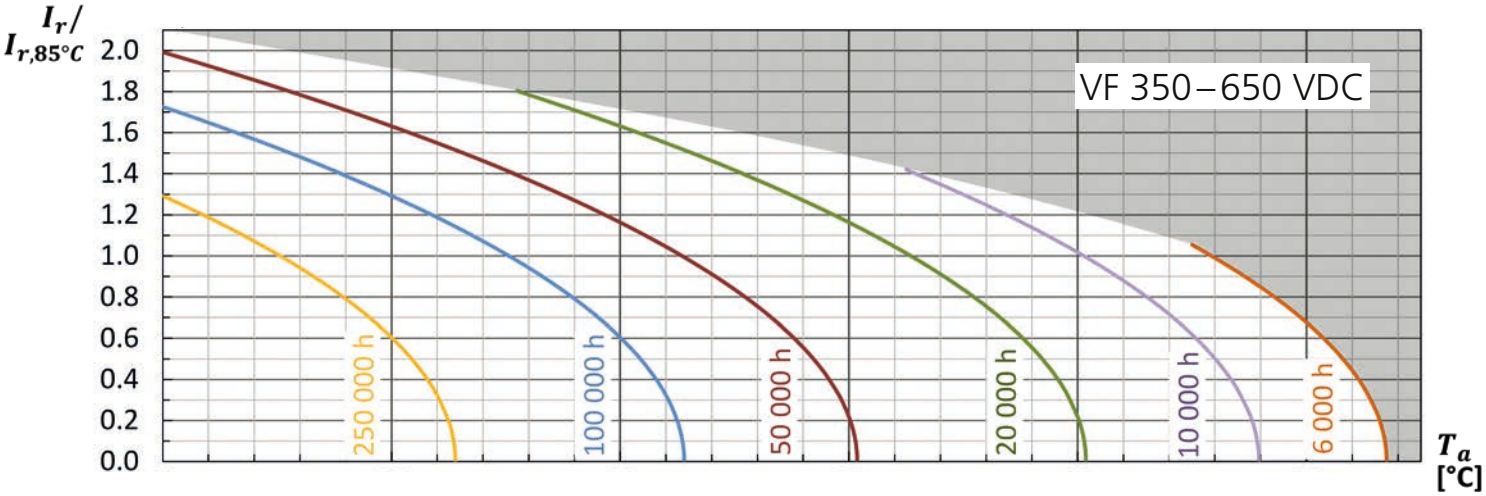

> Life Time Tests and Requirements · Anforderungen Brauchbarkeitsdauer

Life time test	Test procedure	End of Life criteria
Endurance test	T_a = 85°C; V_r, I_r applied 4000 hours	ΔC/C ≤ 10% (of initial value) Tanδ ≤ 175% (of specified value) I_L ≤ specified value
Useful life	T_a = 85°C; V_r, I_r applied 6000 hours	ΔC/C ≤ 15% (of initial value) Tanδ < 200% (of specified value) I_L ≤ specified value

Reference Specification: JIS C 5101-4, JIS C 5102, IEC 60384-4

VFL · Screw-Terminal · 12000 h/85 °C

Long Life · Bottom cooling design · Smaller Size

Optional design for permanent and deep charge-discharge application with high voltage hub and pulsed operation mode upon request.

Spezielles Design für häufige und tiefe Lade-, Entladeanwendungen mit hohem Spannungshub und Impulsbetrieb auf Anfrage erhältlich.

> Specifications · Spezifikationen

Items	Characteristics
Temperature range	-40°C ~ + 85°C
Capacitance tolerance (at 20°C)	Standard +/- 20%, -10/+30% on request
Surge voltage / Ripple voltage	Repetitive max. 30 sec per 6 Minutes / ≤ 50V
Leakage current max. I_L (20°C, 5 min)	0.01 • C • V_r [µA] or 5 mA, which is smaller.
Useful life	12 000 hours at 85°C
Field failure rate	0.5 FIT = 0.5 • 10^{-9} Failures/hour
Reference standards	IEC 60384-4, JIS C 5101-4
Vibration	0.75mm, 10…55Hz, 10g, 3x2h
Outer materials	UL94-V0 / UL224-VW1 certified (cap / sleeve)
Sleeve withstanding voltage	4000 Vac / 1min between terminals bundled and plate*
Product Compliance	RoHS, REACH, Conflict Minerals a.o. – refer to p. 14–15

* Typical value

> Shape designation · Formbezeichnung

- additional information on p. 12–13 · Zusatzinformationen auf S. 12–13
- mounting accessories from p. 219 · Montagezubehör ab S. 219

Diameter 64 mm to 90 mm

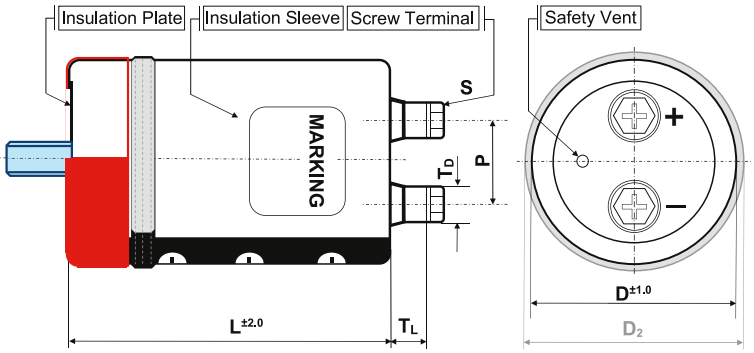

Diameter 51 mm

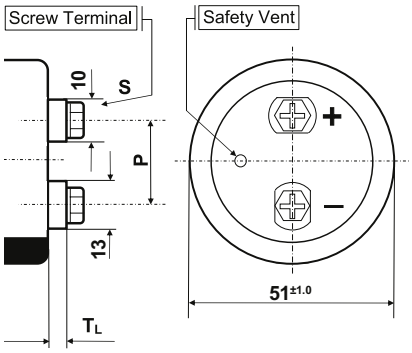

Shape code Features	B Bolt	I/Y double sleeve for 2/3 points metal Bracket	N + suffix WC blank bottom + seating ring	N standard
outer insulation sleeve	•	•	•	•
insulation plate	•	•		•
stud bolt	•			
bottom double sleeve		•		
integrated seating ring			•	

diameter code	ØD	available shape	P	S	T_L	T_D	Cap material
C	51	B, N, I, Y	22.0	M5x10	4.5	13/10	PH
D	64	B, N, I, Y	28.6	M5x10	8.0	11	PH
E	77	B, N, I, Y, WC	31.5	M5x10	8.0	11	PH
				M6x12	9.0	12	PH
F	90	B, N, I, Y, WC	31.5	M5x10	7.0	11	PH
				M6x12	8.0	12	PH

Size in mm. First listed terminal is standard.

AIC EUROPE GmbH · Sales & technical support of AIC capacitors · Telefon: +49 (0)2151-4943-5 · E-Mail: info@aic-europe.com · www.aic-europe.com

> Product Code · Bestellbezeichnung

Example: Series VFL · 12000 µF +/- 20 % · 400 V · D = 90 mm · L = 150 mm with Y-Bracket

VFL **2G** **123** **Y** **F** **150**

- **VFL** – Series name
- **2G** – Rated voltage code
- **123** – Capacitance code
- **Y** – Shape code
- **F** – Diameter code
- **150** – Case length code – length in mm (3 digits)
- Capacitance tolerance: Ø : ± 20 % / Q : -10 % ~ + 30 %
- Specific features (e.g. M6 …)

Rated voltage code					
Code	Voltage	Code	Voltage	Code	Voltage
2V	350	2W	450	2L	550
2G	400	2H	500	600V	600

Rated VoltageCode (Surge Voltage) V_r [V DC]	Capacitance C_r [µF]	Ripple Current at 85°C/120Hz I_r [A RMS]	Ripple Current at 40°C/120Hz [A RMS]	ESR (typ) at 20°C/100Hz [mΩ]	Zmax at 20°C/10kHz [mΩ]	ESL (typ) [nH]	Dissipation Factor at 20°C/120Hz Tan δ	DxL [mm]	Product Code # = variable value, see fixing code in the product code
350 VDC Code: 2V Surge Voltage 400 VDC	**1 800**	7.4	15.6	55	58	17	0.20	51x75	VFL2V182#C075
	2 200	8.5	17.9	45	47	17	0.20	51x96	VFL2V222#C096
	2 700	9.8	20.6	37	39	17	0.20	51x109	VFL2V272#C109
	3 300	11.2	23.6	30	32	17	0.20	51x125	VFL2V332#C125
		12.6	26.5	30	32	18	0.20	64x94	VFL2V332#D094
	4 700	15.1	31.7	21	22	18	0.20	64x94	VFL2V472#D094
	5 600	16.9	35.5	18	19	18	0.20	64x107	VFL2V562#D107
	6 800	18.7	39.3	15	15	18	0.20	64x123	VFL2V682#D123
		20.9	43.9	15	15	20	0.20	77x95	VFL2V682#E095
	8 200	20.2	42.4	12	15	18	0.20	64x147	VFL2V822#D147
		22.9	48.1	12	15	20	0.20	77x108	VFL2V822#E108
		26.5	55.7	12	15	20	0.20	90x97	VFL2V822#F097
	10 000	22.9	48.1	10	15	18	0.20	64x187	VFL2V103#D187
		25.9	54.4	10	15	20	0.20	77x124	VFL2V103#E124
		29.3	61.5	10	15	20	0.20	90x97	VFL2V103#F097
	12 000	27.8	58.4	8	13	20	0.20	77x148	VFL2V123#E148
		31.7	66.6	8	13	20	0.20	90x126	VFL2V123#F126
	15 000	31.9	67.0	7	10	20	0.20	77x188	VFL2V153#E188
		35.2	73.9	7	10	20	0.20	90x150	VFL2V153#F150
	18 000	36.0	75.6	7	10	20	0.20	77x228	VFL2V183#E228
		37.9	79.6	7	10	20	0.20	90x167	VFL2V183#F167
	22 000	41.1	86.3	6	9	20	0.20	90x230	VFL2V223#F230
	27 000	43.0	90.3	5	7	20	0.20	90x268	VFL2V273#F268
400 VDC Code: 2G Surge Voltage 450 VDC	**1 500**	6.8	14.3	68	73	17	0.20	51x75	VFL2G152#C075
	1 800	7.9	16.6	57	61	17	0.20	51x96	VFL2G182#C096
	2 200	9.1	19.2	47	50	17	0.20	51x109	VFL2G222#C109
	2 700	10.2	21.5	38	41	17	0.20	51x125	VFL2G272#C125
	3 300	12.7	26.7	30	31	18	0.20	64x94	VFL2G332#D094
		14.6	30.7	30	31	20	0.20	77x95	VFL2G332#E095
	3 900	13.8	29.0	26	28	18	0.20	64x94	VFL2G392#D094
	4 700	15.5	32.6	21	22	18	0.20	64x107	VFL2G472#D107
		17.4	36.5	21	22	20	0.20	77x95	VFL2G472#E095

Additional designs on request · Weitere Designs auf Anfrage

Rated VoltageCode (Surge Voltage) V_r [V DC]	Capacitance C_r [µF]	Ripple Current at 85°C/120Hz I_r [A RMS]	Ripple Current at 40°C/120Hz [A RMS]	ESR (typ) at 20°C/100Hz [mΩ]	Zmax at 20°C/10kHz [mΩ]	ESL (typ) [nH]	Dissipation Factor at 20°C/120Hz Tan δ	DxL [mm]	Product Code # = variable value, see fixing code in the product code
400 VDC Code: 2G Surge Voltage 450 VDC	**5 600**	16.9	35.5	18	19	18	0.20	64x123	VFL2G562#D123
		19.0	39.9	18	19	20	0.20	77x95	VFL2G562#E095
	6 800	18.4	38.6	15	15	18	0.20	64x147	VFL2G682#D147
		20.8	43.7	15	15	20	0.20	77x108	VFL2G682#E108
		24.2	50.8	15	15	18	0.20	90x97	VFL2G682#F097
	8 200	20.8	43.7	12	15	18	0.20	64x187	VFL2G822#D187
		23.5	49.4	12	15	20	0.20	77x124	VFL2G822#E124
		26.6	55.9	12	15	20	0.20	90x97	VFL2G822#F097
	10 000	25.4	53.3	10	15	20	0.20	77x148	VFL2G103#E148
		28.9	60.7	10	15	20	0.20	90x126	VFL2G103#F126
	12 000	28.5	59.9	8	13	20	0.20	77x188	VFL2G123#E188
		31.3	65.7	8	13	20	0.20	90x143	VFL2G123#F143
		31.5	66.2	8	13	20	0.20	90x150	VFL2G123#F150
	15 000	32.9	69.1	8	10	20	0.20	77x228	VFL2G153#E228
		35.2	73.9	8	10	20	0.20	90x150	VFL2G153#F150
	18 000	37.2	78.1	6	9	20	0.20	90x230	VFL2G183#F230
	22 000	38.9	81.7	5	7	20	0.20	90x268	VFL2G223#F268
450 VDC Code: 2W Surge Voltage 500 VDC	**1 200**	6.3	13.3	86	90	17	0.20	51x75	VFL2W122#C075
	1 500	7.5	15.8	69	72	17	0.20	51x96	VFL2W152#C096
	1 800	8.4	17.7	57	60	17	0.20	51x109	VFL2W182#C109
	2 200	9.4	19.8	47	50	17	0.20	51x125	VFL2W222#C125
	2 700	11.7	24.6	38	40	18	0.20	64x94	VFL2W272#D094
	3 300	13.3	27.9	30	35	18	0.20	64x107	VFL2W332#D107
		14.9	31.3	30	33	20	0.20	77x95	VFL2W332#E095
		15.1	31.7	30	33	20	0.20	77x139	VFL2W332#E139
	3 900	14.5	30.5	27	32	18	0.20	64x123	VFL2W392#D123
		16.2	34.0	27	32	20	0.20	77x95	VFL2W392#E095
	4 700	15.6	32.8	21	21	18	0.20	64x147	VFL2W472#D147
		17.8	37.4	21	21	20	0.20	77x108	VFL2W472#E108
		18.1	38.0	21	21	20	0.20	77x139	VFL2W472#E139R
	5 600	17.5	36.8	20	20	18	0.20	64x164	VFL2W562#D164
		19.9	41.8	20	20	20	0.20	77x124	VFL2W562#E124
		22.5	47.3	20	20	20	0.20	90x97	VFL2W562#F097
	6 000	20.6	43.3	17	19	20	0.20	77x150	VFL2W602#E188
	6 300	21.2	44.3	18	19	20	0.20	77x139	VFL2W632#E139
	6 800	19.4	40.7	15	18	18	0.20	64x187	VFL2W682#D187
		21.4	44.9	15	18	20	0.20	77x148	VFL2W682#E148
		24.6	51.7	15	18	20	0.20	90x110	VFL2W682#F110
	8 200	24.0	50.4	14	16	20	0.20	77x165	VFL2W822#E165
		26.8	56.3	14	16	20	0.20	90x126	VFL2W822#F126
	10 000	26.7	56.1	10	15	20	0.20	77x188	VFL2W103#E188
		29.4	61.7	10	15	20	0.20	90x150	VFL2W103#F150
	12 000	30.2	63.4	9	12	20	0.20	77x228	VFL2W123#E228
		31.7	67.0	9	12	20	0.20	90x167	VFL2W123#F167

Additional designs on request · Weitere Designs auf Anfrage

Rated VoltageCode (Surge Voltage) V_r [V DC]	Capacitance C_r [µF]	Ripple Current at 85°C/120Hz I_r [A RMS]	Ripple Current at 40°C/120Hz [A RMS]	ESR (typ) at 20°C/100Hz [mΩ]	Zmax at 20°C/10kHz [mΩ]	ESL (typ) [nH]	Dissipation Factor at 20°C/120Hz Tan δ	DxL [mm]	Product Code # = variable value, see fixing code in the product code
450 VDC Code: 2W Surge Voltage 500 VDC	**14 000**	34.5	72.5	8	11	20	0.20	90x190	VFL2W143#F190
	15 000	34.8	73.1	7	10	20	0.20	90x230	VFL2W153#F230
	17 000	37.0	77.7	6	8	20	0.20	90x230	VFL2W173#F230
	18 000	37.6	79.0	6	8	20	0.20	90x268	VFL2W183#F268
500 VDC Code: 2H Surge Voltage 550 VDC	**820**	4.7	9.9	117	110	17	0.20	51x75	VFL2H821#C075
	1 000	5.6	11.8	96	90	17	0.20	51x96	VFL2H102#C096
	1 200	6.3	13.3	80	75	17	0.20	51x109	VFL2H122#C109
	1 500	7.2	15.2	64	60	17	0.20	51x125	VFL2H152#C125
	1 800	9.1	19.1	53	50	18	0.20	64x94	VFL2H182#D094
	2 200	10.3	21.6	40	35	18	0.20	64x107	VFL2H222#D107
	2 700	11.5	24.2	37	33	18	0.20	64x123	VFL2H272#D123
		12.9	27.1	37	33	20	0.20	77x95	VFL2H272#E095
	3 300	12.5	26.3	36	32	18	0.20	64x147	VFL2H332#D147
		14.2	29.8	36	32	20	0.20	77x108	VFL2H332#E108
	3 900	13.9	29.2	27	29	18	0.20	64x164	VFL2H392#D164
		15.8	33.2	27	29	20	0.20	77x124	VFL2H392#E124
		17.9	37.6	27	29	20	0.20	90x97	VFL2H392#F097
	4 700	15.4	32.3	25	25	20	0.20	64x187	VFL2H472#D187
		17.0	35.7	25	25	20	0.20	77x148	VFL2H472#E148
		19.5	41.0	25	25	20	0.20	90x110	VFL2H472#F110
	5 600	18.9	39.7	23	21	20	0.20	77x165	VFL2H562#E165
		21.1	44.3	23	21	20	0.20	90x126	VFL2H562#F126
	6 800	20.9	43.9	20	18	20	0.20	77x188	VFL2H682#E188
		23.1	48.5	20	18	20	0.20	90x150	VFL2H682#F150
	8 200	25.0	52.5	17	16	20	0.20	90x167	VFL2H822#F167
	10 000	27.8	58.4	14	12	20	0.20	90x190	VFL2H103#F190
	12 000	29.6	62.2	12	10	20	0.20	90x230	VFL2H123#F230
	15 000	32.7	68.7	10	8	20	0.20	90x268	VFL2H153#F268
550 VDC Code: 2L Surge Voltage 600 VDC	**560**	3.9	8.2	200	215	17	0.20	51x75	VFL2L561#C075
	680	4.2	8.8	165	177	17	0.20	51x75	VFL2L681#C075
	820	5.0	10.5	137	147	17	0.20	51x96	VFL2L821#C096
	1 000	5.6	11.8	112	120	17	0.20	51x109	VFL2L102#C109
	1 200	6.4	13.4	93	100	17	0.20	51x125	VFL2L122#C125
		7.3	15.3	93	100	18	0.20	64x94	VFL2L122#D094
	1 500	8.1	17.0	74	80	18	0.20	64x94	VFL2L152#D094
	1 800	9.1	19.1	61	50	18	0.20	64x107	VFL2L182#D107
		10.3	21.6	61	50	20	0.20	77x95	VFL2L182#E095
	2 200	10.1	21.2	53	50	18	0.20	64x123	VFL2L222#D123
		11.4	23.9	53	50	20	0.20	77x95	VFL2L222#E095
	2 700	11.0	23.1	40	35	18	0.20	64x147	VFL2L272#D147
		12.5	26.3	40	35	20	0.20	77x108	VFL2L272#E108
		14.5	30.5	40	35	20	0.20	90x97	VFL2L272#F097
	3 300	12.5	26.3	38	32	18	0.20	64x164	VFL2L332#D164
		14.2	29.8	38	32	20	0.20	77x124	VFL2L332#E124
		16.1	33.8	38	32	20	0.20	90x97	VFL2L332#F097

Additional designs on request · Weitere Designs auf Anfrage

Rated VoltageCode (Surge Voltage) V_r [V DC]	Capacitance C_r [µF]	Ripple Current at 85°C/120Hz I_r [A RMS]	Ripple Current at 40°C/120Hz [A RMS]	ESR (typ) at 20°C/100Hz [mΩ]	Zmax at 20°C/10kHz [mΩ]	ESL (typ) [nH]	Dissipation Factor at 20°C/120Hz Tan δ	DxL [mm]	Product Code # = variable value, see fixing code in the product code
550 VDC Code: 2L Surge Voltage 600 VDC	**3 900**	13.7	28.8	30	27	18	0.20	64x187	VFL2L392#D187
		15.1	31.7	30	27	20	0.20	77x148	VFL2L392#E148
		17.4	36.5	30	27	20	0.20	90x110	VFL2L392#F110
	4 700	16.9	35.5	25	20	20	0.20	77x165	VFL2L472#E165
		18.9	39.7	25	20	20	0.20	90x126	VFL2L472#F126
	5 600	18.6	39.1	20	17	20	0.20	77x188	VFL2L562#E188
		20.5	43.1	20	17	20	0.20	90x150	VFL2L562#F150
	6 800	22.2	46.6	17	15	20	0.20	90x167	VFL2L682#F167
	8 200	24.6	51.7	14	15	20	0.20	90x190	VFL2L822#F190
	10 000	26.5	55.7	12	12	20	0.20	90x230	VFL2L103#F230
	12 000	27.4	57.5	10	10	20	0.20	90x268	VFL2L123#F268
600 VDC Code: 600V Surge Voltage 650 VDC	**470**	2.6	5.5	312	320	17	0.20	51x75	VFL600V471#C075
	560	3.0	6.1	262	268	17	0.20	51x96	VFL600V561#C096
	680	3.4	7.2	216	221	17	0.20	51x109	VFL600V681#C109
	820	3.9	8.2	179	183	17	0.20	51x125	VFL600V821#C125
	1 200	7.0	14.7	122	125	18	0.20	64x94	VFL600V122#D094
	1 500	8.0	16.8	111	114	18	0.20	64x123	VFL600V152#D123
		9.0	18.9	111	114	20	0.20	77x95	VFL600V152#E095
	1 800	8.6	18.1	99	102	18	0.20	64x147	VFL600V182#D147
		9.8	20.6	99	102	20	0.20	77x108	VFL600V182#E108
	2 200	9.8	20.6	85	87	18	0.20	64x164	VFL600V222#D164
		11.1	23.3	85	87	20	0.20	77x124	VFL600V222#E124
		12.6	26.5	85	87	20	0.20	90x97	VFL600V222#F097
	2 700	10.9	22.9	66	68	18	0.20	64x187	VFL600V272#D187
		13.8	29.0	66	68	20	0.20	90x110	VFL600V272#F110
	3 300	13.3	27.9	44	45	20	0.20	77x148	VFL600V332#E148
		15.2	31.9	44	45	20	0.20	90x126	VFL600V332#F126
	3 900	14.9	31.3	33	25	20	0.20	77x188	VFL600V392#E188
		16.4	34.4	33	25	20	0.20	90x150	VFL600V392#F150
	4 700	16.9	35.5	27	20	20	0.20	77x228	VFL600V472#E228
		17.7	37.2	27	20	20	0.20	90x167	VFL600V472#F167
	5 600	19.5	41.0	23	17	20	0.20	90x190	VFL600V562#F190
	6 800	20.9	43.9	19	14	20	0.20	90x230	VFL600V682#F230

Additional designs on request · Weitere Designs auf Anfrage

› Ripple Current Multiplier · Wechselstrommultiplikator

Frequency [Hz]	50/60	120	300	1k	≥ 10k
Multiplier	0.80	1.00	1.18	1.34	1.45

Ta (°C)	40	45	50	55	60	65	70	75	80	85
Multiplier	2.1	2.0	1.9	1.8	1.7	1.5	1.3	1.2	1.1	1.0

Forced cooling – Wind speed [m/sec]	v < 0.25	v ≥ 0.25	v ≥ 0.5	v ≥ 1.0	v ≥ 2.0	v ≥ 3.0
Multiplier	1.00	1.07	1.15	1.25	1.30	1.35

› Life Time Table · Brauchbarkeitsdauer – Tabelle

VFL	Useful life as function of ambient temperature and ripple current											
I_r at 85°C	x 1.0	x 1.1	x 1.2	x 1.3	x 1.4	x 1.5	x 1.6	x 1.7	x 1.8	x 1.9	x 2.0	x 2.1
T_a = 40°C	250	250	250	250	250	250	250	212	166	128	97	73
T_a = 45°C	250	250	250	250	250	210	169	134	105	81	61	
T_a = 50°C	250	250	235	197	163	133	107	85	66	51		
T_a = 55°C	202	174	148	124	103	84	67	53	42			
T_a = 60°C	128	110	94	79	65	53	42	34				
T_a = 65°C	81	69	59	49	41	33						
T_a = 70°C	51	44	37	31								
T_a = 75°C	32	27	23									
T_a = 80°C	20	17										
T_a = 85°C	12											

khrs Max. value limited to 250 000 hours.

› Life Time Graph · Brauchbarkeitsdauer – Diagramm

Useful life depending on ambient temperature T_a and ripple current operating conditions I_r versus rated ripple current at the upper category temperature $I_{r,\,85°C,120Hz}$

Brauchbarkeitsdauer in Abhängigkeit von Umgebungstemperatur T_a und Wechselstrombelastung I_r im Verhältnis zur max. Wechselstrombelastung bei oberer Kategorietemperatur $I_{r,\,85°C,120Hz}$

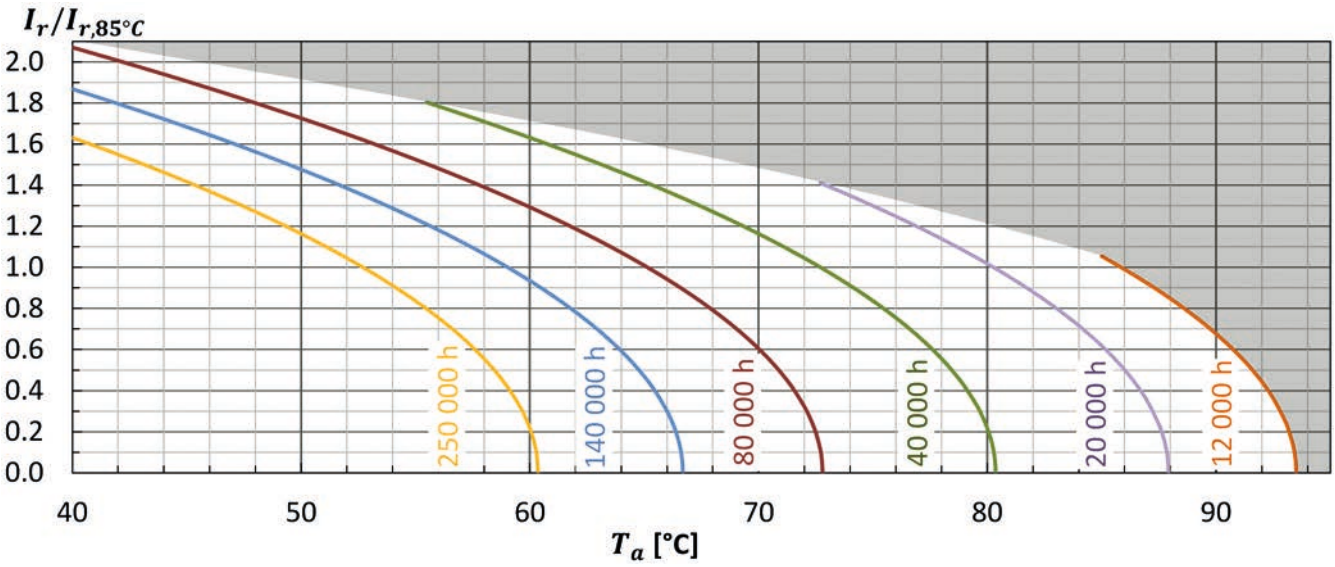

› Life Time Tests and Requirements · Anforderungen Brauchbarkeitsdauer

Life time test	Test procedure	End of Life criteria
Endurance test	T_a = 85°C; V_r, I_r applied 8000 hours	ΔC/C ≤ 10% (of initial value) Tanδ ≤ 175% (of specified value) I_L ≤ specified value
Useful life	T_a = 85°C; V_r, I_r applied 12000 hours	ΔC/C ≤ 15% (of initial value) Tanδ < 200% (of specified value) I_L ≤ specified value

Reference Specification: JIS C 5101-4, JIS C 5102, IEC 60384-4

FX2 · Screw-Terminal · 12000 h/85 °C

Long Life · Compact

Optional design for permanent and deep charge-discharge application with high voltage hub and pulsed operation mode upon request.

Spezielles Design für häufige und tiefe Lade-, Entladeanwendungen mit hohem Spannungshub und Impulsbetrieb auf Anfrage erhältlich.

› Specifications · Spezifikationen

Items	Characteristics
Temperature range	-40°C ~ + 85°C
Capacitance tolerance (at 20°C)	Standard +/- 20%, -10/+30% on request
Surge voltage	Repetitive max. 30 sec per 6 Minutes
Leakage current max. I_L (20°C, 5 min)	0.01 • C • V_r [µA] or 3 mA, which is smaller.
Useful life	12 000 hours at 85°C
Field failure rate	0.5 FIT = 0.5 • 10^{-9} Failures/hour
Reference standards	IEC 60384-4, JIS C 5101-4
Vibration	0.75mm, 10…55Hz, 10g, 3x2h
Outer materials	UL94-V0 / UL224-VW1 certified (cap / sleeve)
Sleeve withstanding voltage	4000 Vac / 1min between terminals bundled and plate*
Product Compliance	RoHS, REACH, Conflict Minerals a.o. – refer to p. 14–15

* Typical value

› Shape designation · Formbezeichnung

- additional information on p. 12–13 · Zusatzinformationen auf S. 12–13
- mounting accessories from p. 219 · Montagezubehör ab S. 219

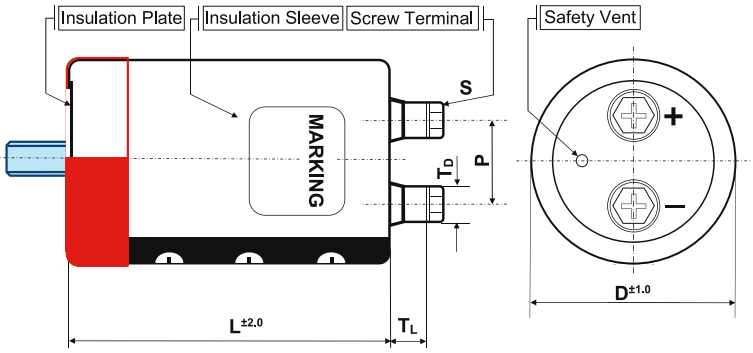

Shape code Features	B Bolt	I / Y double sleeve for 2/3 points metal Bracket	N standard
outer insulation sleeve	•	•	•
insulation plate	•	•	•
stud bolt	•		
bottom double sleeve		•	

diameter code	ØD	available shape	P	S	T_L	T_D	Cap material
C	51	B, N, I, Y	22.0	M5x10	5.5	10	PH
D	64	B, N, I, Y	28.6	M5x10	5.5	10	PH
E	77	B, N, I, Y	31.5	M5x10	5.0	10	PH
				M6x12	4.5	17.2	PH
F	90	B, N, I, Y	31.5	M5x10	5.0	10	PH
				M6x12	5.0	17.2	PH
G	101	B, N, Y	41.5	M8x16	11.0	14	PH
			31.5	M6x12	3.0	14	PH

Size in mm. First listed terminal is standard.

› Product Code · Bestellbezeichnung

Example: Series FX2 · 10.000 µF +/- 20 % · 400 V · D = 77 mm · L = 195 mm with stud bolt & M6

FX2 **2G** **103** **B** **E** **195** **PHM6**

- **FX2** – Series name
- **2G** – Rated voltage code
- **103** – Capacitance code
- **B** – Shape code
- **E** – Diameter code
- **195** – Case length code – length in mm (3 digits)
- **PHM6** – Specific features (e.g. M6 …)

Capacitance tolerance
Ø : ± 20 %
Q : -10 % ~ + 30 %

Rated voltage code

Code	Voltage	Code	Voltage	Code	Voltage
2V	350	2W	450	2L	550
2G	400	2H	500	600V	600

Rated VoltageCode (Surge Voltage) V_r [V DC]	Capacitance C_r [µF]	Ripple Current at 85°C/120Hz I_r [A RMS]	Ripple Current at 40°C/120Hz [A RMS]	ESR (typ) at 20°C/100Hz [mΩ]	Zmax at 20°C/10kHz [mΩ]	ESL (typ) [nH]	Dissipation Factor at 20°C/120Hz Tan δ	DxL [mm]	Product Code # = variable value, see fixing code in the product code
350 VDC Code: 2V Surge Voltage 400 VDC	**2 700**	11.2	23.5	25	25	17	0.15	51x115	FX22V272#C115
	3 300	13.0	27.3	22	22	17	0.15	51x130	FX22V332#C130
	3 900	13.8	29.0	19	21	18	0.15	64x96	FX22V392#D096
	4 700	16.1	33.8	16	20	18	0.15	64x115	FX22V472#D115
	5 600	18.5	38.8	14	18	18	0.15	64x130	FX22V562#D130
	6 800	20.6	43.3	12	15	20	0.15	77x115	FX22V682#E115
	8 200	23.7	49.8	12	15	20	0.15	77x130	FX22V822#E130
		25.4	53.3	12	15	20	0.15	77x145	FX22V822#SE145
	10 000	27.1	56.9	10	15	20	0.15	77x143	FX22V103#E143
		28.1	59.0	10	15	20	0.15	77x155	FX22V103#E155
	12 000	32.1	67.4	8	13	20	0.15	77x171	FX22V123#E171
		30.7	64.5	8	13	20	0.15	90x131	FX22V123#F131
	15 000	37.7	79.2	6	10	20	0.15	77x195	FX22V153#E195
		39.6	83.2	6	10	20	0.15	77x220	FX22V153#E220
		36.7	77.1	6	10	20	0.15	90x157	FX22V153#F157
	18 000	43.8	92.0	5	9	20	0.15	90x196	FX22V183#F196
	22 000	52.3	109.8**	5	8	20	0.15	90x236	FX22V223#F236
	27 000	59.8	125.6**	5	8	29	0.15	101x237*	FX22V273#G237
400 VDC Code: 2G Surge Voltage 450 VDC	**1 100**	6.0	12.6	60	64	17	0.15	51x75	FX22G112#C075
	1 800	7.7	16.2	51	54	17	0.15	51x96	FX22G182#C096
		8.6	18.1	51	54	17	0.15	51x100	FX22G182#C100
	2 200	8.7	18.3	46	48	17	0.15	51x83	FX22G222#C083
		9.7	20.4	46	48	17	0.15	51x105	FX22G222#C105
		10.1	21.2	46	48	17	0.15	51x115	FX22G222#C115
	2 400	10.5	22.1	43	44	17	0.15	51x115	FX22G242#C115
	2 700	11.5	24.2	38	40	17	0.15	51x115	FX22G272#SC115
	3 300	12.6	26.5	30	32	18	0.15	64x96	FX22G332#D096
	3 900	13.1	27.5	30	32	18	0.15	64x104	FX22G392#D104
		14.7	30.9	26	28	18	0.15	64x115	FX22G392#D115
	4 400	15.2	31.9	23	25	18	0.15	64x106	FX22G442#D106
	4 700	17.0	35.7	21	22	18	0.15	64x130	FX22G472#D130
		16.0	33.6	21	22	20	0.15	77x96	FX22G472#E096
	5 600	18.6	39.1	18	19	20	0.15	77x115	FX22G562#E115

Additional designs on request · Weitere Designs auf Anfrage

Rated VoltageCode (Surge Voltage) V_r [V DC]	Capacitance C_r [µF]	Ripple Current at 85°C/120Hz I_r [A RMS]	Ripple Current at 40°C/120Hz [A RMS]	ESR (typ) at 20°C/100Hz [mΩ]	Zmax at 20°C/10kHz [mΩ]	ESL (typ) [nH]	Dissipation Factor at 20°C/120Hz Tan δ	DxL [mm]	Product Code # = variable value, see fixing code in the product code
400 VDC Code: 2G Surge Voltage 450 VDC	**6 800**	21.5	45.2	15	15	20	0.15	77x130	FX22G682#E130
	8 200	24.6	51.7	12	15	20	0.15	77x145	FX22G822#E145
		25.3	53.1	12	15	20	0.15	77x155	FX22G822#E155
	10 000	29.1	61.1	10	15	20	0.15	77x171	FX22G103#E171
		30.7	64.5	10	15	20	0.15	77x195	FX22G103#E195
		27.8	58.4	10	15	20	0.15	90x131	FX22G103#F131
	12 000	35.3	74.1	8	13	20	0.15	77x220	FX22G123#E220
		32.8	68.9	8	13	20	0.15	90x157	FX22G123#F157
	15 000	40.0	84.0	7	10	20	0.15	90x196	FX22G153#F196
	18 000	46.1	96.8	6	9	20	0.15	90x221	FX22G183#F221
		47.4	99.5	6	9	20	0.15	90x236	FX22G183#F236
	19 000	48.6	102.2**	6	9	20	0.15	90x236	FX22G193#F236
	22 000	54.0	113.4**	5	8	29	0.15	101x237*	FX22G223#G237
	25 000	58.9	123.6**	5	8	29	0.15	101x250*	FX22G253#G250
	27 000	64.4	135.2**	5	7	29	0.15	101x283*	FX22G273#G283
450 VDC Code: 2W Surge Voltage 500 VDC	**1 100**	5.8	12.2	80	70	17	0.15	51x75	FX22W112#C075
	1 500	7.7	16.2	67	70	17	0.15	51x105	FX22W152#C105
		7.9	16.6	67	60	17	0.15	51x96	FX22W152#QC096
	1 800	8.7	18.3	56	56	17	0.15	51x115	FX22W182#C115
	2 000	10.6	22.2	50	52	17	0.15	51x115	FX22W202#C115
	2 200	10.1	21.2	46	45	17	0.15	51x130	FX22W222#C130
	2 700	10.9	22.9	38	40	18	0.15	64x96	FX22W272#D096
		12.0	25.1	38	40	18	0.15	64x106	FX22W272#D106
	3 300	12.9	27.1	30	35	18	0.15	64x115	FX22W332#D115
		12.1	25.4	30	35	20	0.15	77x96	FX22W332#E096
	3 900	14.7	30.9	27	32	18	0.15	64x130	FX22W392#D130
	4 700	17.4	36.5	21	23	18	0.15	64x155	FX22W472#D155
		16.2	34.0	21	23	20	0.15	77x115	FX22W472#E115
	5 600	18.6	39.1	20	22	20	0.15	77x130	FX22W562#E130
	6 600	22.1	46.4	18	19	20	0.15	77x143	FX22W662#E143
	6 800	22.0	46.2	15	18	20	0.15	77x155	FX22W682#E155
	8 200	26.4	55.4	16	16	20	0.15	77x195	FX22W822#E195
		27.8	58.4	16	16	20	0.15	77x220	FX22W822#E220
		24.2	50.8	16	16	20	0.15	90x131	FX22W822#F131
	8 800	26.0	54.6	12	16	20	0.15	77x171	FX22W882#E171
	10 000	30.9	64.9	10	15	20	0.15	77x222	FX22W103#E222
		29.6	62.2	10	15	20	0.15	90x171	FX22W103#F171
	12 000	34.2	71.8	9	12	20	0.15	90x196	FX22W123#F196
		33.7	70.8	9	12	29	0.15	101x175*	FX22W123#G175
	15 000	38.2	80.2	7	12	20	0.15	90x196	FX22W153#F196
		41.3	86.7	7	10	20	0.15	90x236	FX22W153#F236
	18 000	45.3	95.2	6	10	20	0.15	90x236	FX22W183#F236
	20 000	53.0	111.3**	5	8	29	0.15	101x237*	FX22W203#G237
	23 000	53.8	113.0**	5	9	29	0.15	101x250*	FX22W233#G250

Additional designs on request · Weitere Designs auf Anfrage

Rated VoltageCode (Surge Voltage) V_r [V DC]	Capacitance C_r [µF]	Ripple Current at 85°C/120Hz I_r [A RMS]	Ripple Current at 40°C/120Hz [A RMS]	ESR (typ) at 20°C/100Hz [mΩ]	Zmax at 20°C/10kHz [mΩ]	ESL (typ) [nH]	Dissipation Factor at 20°C/120Hz Tan δ	DxL [mm]	Product Code # = variable value, see fixing code in the product code
500 VDC Code: 2H Surge Voltage 550 VDC	**820**	4.9	10.3	140	151	17	0.20	51x75	FX22H821#C075
	1 000	6.3	13.2	112	120	17	0.20	51x105	FX22H102#C105
	1 200	7.1	14.9	93	100	17	0.20	51x115	FX22H122#C115
		7.2	15.1	93	100	18	0.20	64x96	FX22H122#D096
	1 500	7.9	16.6	74	80	17	0.20	51x115	FX22H152#C115
		8.2	17.2	74	80	18	0.20	64x96	FX22H152#D096
	1 800	9.5	20.0	53	53	18	0.20	64x115	FX22H182#D115
		9.4	19.8	53	53	20	0.20	77x96	FX22H182#E096
	2 200	10.9	22.9	40	40	18	0.20	51x155	FX22H222#C155
		11.0	23.1	40	40	18	0.20	64x130	FX22H222#D130
		10.4	21.7	40	40	20	0.20	77x96	FX22H222#E096
	2 500	12.3	25.8	38	40	18	0.20	64x144	FX22H252#D144
		11.0	23.1	38	40	20	0.20	77x96	FX22H252#E096
	2 700	12.3	25.8	37	37	20	0.20	77x115	FX22H272#E115
	3 300	14.3	30.0	36	36	20	0.20	77x130	FX22H332#E130
	3 900	16.1	33.8	27	29	20	0.20	77x145	FX22H392#E145
		16.6	34.9	27	29	20	0.20	77x155	FX22H392#E155
	4 700	18.2	38.2	25	25	20	0.20	77x155	FX22H472#E155
		19.0	39.9	25	25	20	0.20	77x171	FX22H472#E171
		18.2	38.2	25	25	20	0.20	90x131	FX22H472#F131
	5 600	21.8	45.8	23	21	20	0.20	77x195	FX22H562#E195
		21.4	44.9	23	21	20	0.20	90x157	FX22H562#F157
	6 800	24.4	51.2	20	20	20	0.20	90x171	FX22H682#F171
	8 200	28.2	59.2	17	16	20	0.20	90x196	FX22H822#F196
		27.8	58.4	17	16	29	0.20	101x175*	FX22H822#G175
	9 400	30.1	63.2	15	15	20	0.20	90x196	FX22H942#F196
	10 000	33.7	70.8	14	14	20	0.20	90x236	FX22H103#F236
		32.1	67.4	14	14	29	0.20	101x195*	FX22H103#G195
	12 000	36.8	77.3	12	12	20	0.20	90x236	FX22H123#F236
		38.1	80.0	11	11	29	0.20	101x237*	FX22H123#G237
550 VDC Code: 2L Surge Voltage 600 VDC	**680**	5.1	10.7	165	177	17	0.20	51x105	FX22L681#C105
	1 000	6.8	14.3	112	120	17	0.20	51x130	FX22L102#C130
	1 200	7.8	16.4	93	100	18	0.20	64x115	FX22L122#D115
	1 500	9.2	19.3	74	80	18	0.20	64x130	FX22L152#D130
	1 800	10.0	21.0	61	50	20	0.20	77x115	FX22L182#E115
	2 200	11.6	24.4	53	40	20	0.20	77x130	FX22L222#E130
	2 700	12.9	27.1	40	35	20	0.20	77x130	FX22L272#E130
	3 300	15.3	32.1	38	32	20	0.20	77x155	FX22L332#E155
	3 900	17.8	37.4	30	27	20	0.20	90x157	FX22L392#F157
	4 200	17.9	37.6	28	27	20	0.20	77x171	FX22L422#E171
	4 700	20.4	42.8	25	20	20	0.20	77x203	FX22L472#E203
		20.2	42.4	25	20	20	0.20	90x171	FX22L472#F171
	5 000	22.4	47.0	24	20	20	0.20	77x235	FX22L502#E235
	5 600	22.1	46.4	20	17	20	0.20	90x171	FX22L562#F171
		23.3	48.9	20	17	20	0.20	90x196	FX22L562#F196

Additional designs on request · Weitere Designs auf Anfrage

Rated VoltageCode (Surge Voltage) V_r [V DC]	Capacitance C_r [µF]	Ripple Current at 85°C/120Hz I_r [A RMS]	Ripple Current at 40°C/120Hz [A RMS]	ESR (typ) at 20°C/100Hz [mΩ]	Zmax at 20°C/10kHz [mΩ]	ESL (typ) [nH]	Dissipation Factor at 20°C/120Hz Tan δ	DxL [mm]	Product Code # = variable value, see fixing code in the product code
550 VDC Code: 2L Surge Voltage 600 VDC	**6 000**	24.5	51.4	19	17	20	0.20	77x235	FX22L602#E235
	6 800	25.6	53.8	17	17	20	0.20	90x196	FX22L682#F196
		27.7	58.2	17	17	20	0.20	90x236	FX22L682#F236
	8 200	30.4	63.8	15	15	20	0.20	90x236	FX22L822#F236
	9 200	32.2	67.6	13	13	20	0.20	90x236	FX22L922#F236
600 VDC Code: 600V Surge Voltage 650 VDC	**1 000**	4.8	10.1	129	133	18	0.20	64x96	FX2600V102#D096
	1 200	5.6	11.8	122	125	18	0.20	64x115	FX2600V122#D115
	1 500	6.3	13.2	111	114	20	0.20	77x96	FX2600V152#E096
	1 800	7.3	15.5	99	102	20	0.20	77x115	FX2600V182#E115
	2 200	8.5	17.9	85	87	20	0.20	77x130	FX2600V222#E130
	2 700	10.1	21.2	66	68	20	0.20	77x155	FX2600V272#E155
	3 300	11.3	23.7	44	45	20	0.20	90x131	FX2600V332#F131
	3 900	13.1	27.5	22	22	20	0.20	90x157	FX2600V392#F157

* For Bolt mounting, lenght dimensions increase by +3 mm for M6 items and by +2 mm for M8 items

** Please contact us if load condition exceeds terminals related $I_{r\,max}$ referred on page 13

Additional designs on request · Weitere Designs auf Anfrage

› Ripple Current Multiplier · Wechselstrommultiplikator

Frequency [Hz]	50/60	120	300	1k	≥ 10k
Multiplier	0.80	1.00	1.18	1.34	1.45

Temperature (°C)	40	45	50	55	60	65	70	75	80	85
Multiplier	2.1	2.0	1.9	1.8	1.7	1.5	1.4	1.3	1.1	1.0

Forced cooling – Wind speed [m/sec]	v < 0.25	v ≥ 0.25	v ≥ 0.5	v ≥ 1.0	v ≥ 2.0	v ≥ 3.0
Multiplier	1.00	1.05	1.10	1.15	1.20	1.25

› Life Time Table · Brauchbarkeitsdauer – Tabelle

FX2	Useful life as function of ambient temperature and ripple current											
I_r at 85°C	x 1.0	x 1.1	x 1.2	x 1.3	x 1.4	x 1.5	x 1.6	x 1.7	x 1.8	x 1.9	x 2.0	x 2.1
T_a = 40°C	250	250	250	250	250	250	250	199	154	118	89	66
T_a = 45°C	250	250	250	250	247	200	160	126	97	74	56	
T_a = 50°C	250	250	227	190	156	126	101	79	61	47		
T_a = 55°C	198	170	144	120	98	80	64	50	39			
T_a = 60°C	125	107	91	76	62	50	40	31				
T_a = 65°C	79	68	57	48	39	32						
T_a = 70°C	50	43	36	30	25							
T_a = 75°C	31	27	23	19								
T_a = 80°C	20	17										
T_a = 85°C	12											

khrs Max. value limited to 250 000 hours.

› Life Time Graph · Brauchbarkeitsdauer – Diagramm

Useful life depending on ambient temperature T_a and ripple current operating conditions I_r versus rated ripple current at the upper category temperature $I_{r,\ 85°C,120Hz}$

Brauchbarkeitsdauer in Abhängigkeit von Umgebungstemperatur T_a und Wechselstrombelastung I_r im Verhältnis zur max. Wechselstrombelastung bei oberer Kategorietemperatur $I_{r,\ 85°C,120Hz}$

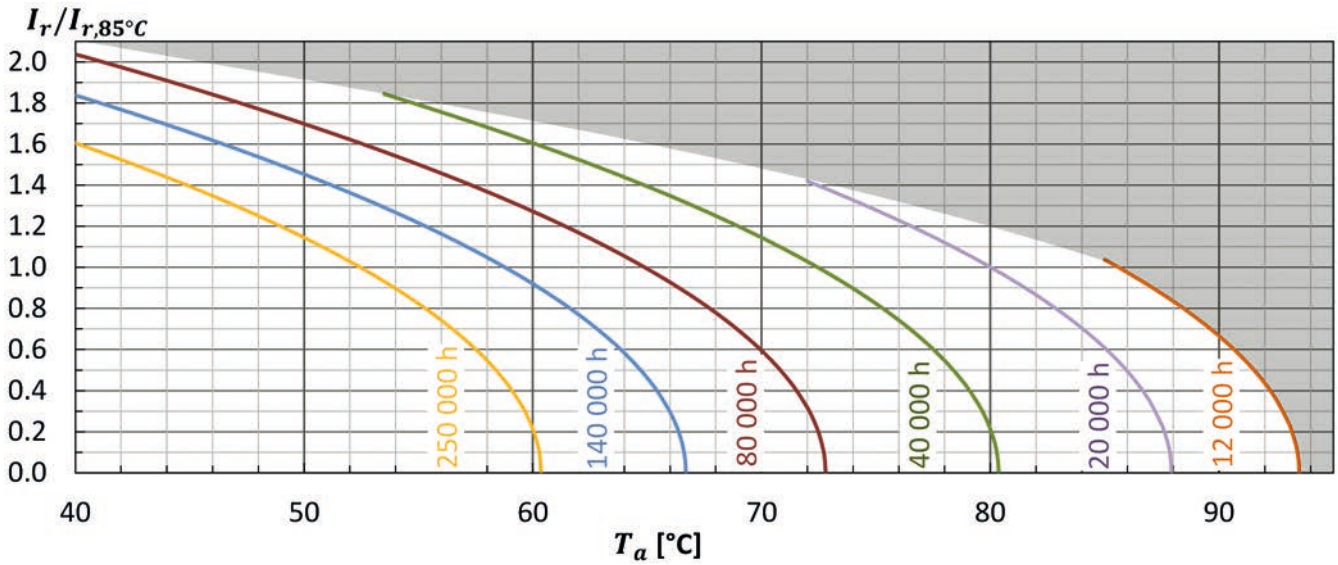

› Life Time Tests and Requirements · Anforderungen Brauchbarkeitsdauer

Life time test	Test procedure	End of Life criteria
Endurance test	T_a = 85°C; V_r, I_r applied 8000 hours	ΔC/C ≤ 10% (of initial value) Tanδ ≤ 175% (of specified value) I_L ≤ specified value
Useful life	T_a = 85°C; V_r, I_r applied 12000 hours	ΔC/C ≤ 15% (of initial value) Tanδ < 200% (of specified value) I_L ≤ specified value

Reference Specification: JIS C 5101-4, JIS C 5102, IEC 60384-4

FX3 · Screw-Terminal · 10 000 h/85 °C

Compact Design · Long Life

Optional design for permanent and deep charge-discharge application with high voltage hub and pulsed operation mode upon request.

Spezielles Design für häufige und tiefe Lade-, Entladeanwendungen mit hohem Spannungshub und Impulsbetrieb auf Anfrage erhältlich.

› Specifications · Spezifikationen

Items	Characteristics
Temperature range	-40°C ~ + 85°C
Capacitance tolerance (at 20°C)	Standard +/- 20%, -10/+30% on request
Surge voltage	Repetitive max. 30 sec per 6 Minutes
Leakage current max. I_L (20°C, 5 min)	0.01 • C • V_r [µA] or 3 mA, which is smaller.
Useful life	10 000 hours at 85°C
Field failure rate	0.5 FIT = 0.5 • 10^{-9} Failures/hour
Reference standards	IEC 60384-4, JIS C 5101-4
Vibration	0.75mm, 10…55Hz, 10g, 3x2h
Outer materials	UL94-V0 / UL224-VW1 certified (cap / sleeve)
Sleeve withstanding voltage	4000 Vac / 1min between terminals bundled and plate*
Product Compliance	RoHS, REACH, Conflict Minerals a.o. – refer to p. 14–15

* Typical value

› Shape designation · Formbezeichnung

- additional information on p. 12–13 · Zusatzinformationen auf S. 12–13
- mounting accessories from p. 219 · Montagezubehör ab S. 219

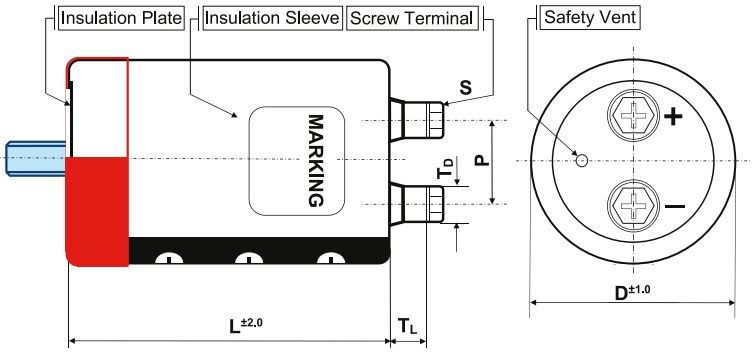

Shape code Features	B Bolt	I / Y double sleeve for 2/3 points metal Bracket	N standard
outer insulation sleeve	•	•	•
insulation plate	•	•	•
stud bolt	•		
bottom double sleeve		•	

diameter code	ØD	available shape	P	S	T_L	T_D	Cap material
C	51	B, N, I, Y	22.0	M5x10	5.5	10	PH
D	64	B, N, I, Y	28.6	M5x10	5.5	10	PH
E	77	B, N, I, Y	31.5	M5x10	5.0	10	PH
				M6x12	4.5	17.2	PH
F	90	B, N, I, Y	31.5	M5x10	5.0	10	PH
				M6x12	5.0	17.2	PH

Size in mm. First listed terminal is standard.

> Product Code · Bestellbezeichnung

Example: Series FX3 · 8200 µF +/- 20 % · 400 V · D = 77 mm · L = 130 mm with Y-Bracket

FX3 **2G** **822** **Y** **E** **130** **PHM6**

- **FX3** – Series name
- **2G** – Rated voltage code
- **822** – Capacitance code
- **Y** – Shape code
- **E** – Diameter code
- **130** – Case length code – length in mm (3 digits)
- **PHM6** – Specific features (e.g. M6 …)

Capacitance tolerance
Ø : ± 20 %
Q : -10 % ~ + 30 %

Rated voltage code

Code	Voltage	Code	Voltage	Code	Voltage
2G	400	2W	450	2H	500

Rated VoltageCode (Surge Voltage) V_r [V DC]	Capacitance C_r [µF]	Ripple Current at 85°C/120Hz I_r [A RMS]	Ripple Current at 40°C/120Hz [A RMS]	ESR (typ) at 20°C/100Hz [mΩ]	Zmax at 20°C/10kHz [mΩ]	ESL (typ) [nH]	Dissipation Factor at 20°C/120Hz Tan δ	DxL [mm]	Product Code # = variable value, see fixing code in the product code
400 VDC Code: 2G Surge Voltage 450 VDC	**2 200**	9.7	20.3	46	48	17	0.20	51x96	FX32G222#C096
	2 700	11.5	24.2	38	40	17	0.20	51x115	FX32G272#C115
	3 000	12.1	25.4	34	36	17	0.20	51x115	FX32G302#C115
	3 300	13.3	28.0	30	32	17	0.20	51x130	FX32G332#C130
	3 900	14.1	29.7	26	28	18	0.20	64x96	FX32G392#D096
	4 700	16.7	35.0	21	22	18	0.20	64x115	FX32G472#D115
	5 600	19.1	40.1	18	19	18	0.20	64x130	FX32G562#D130
	6 800	22.7	47.6	15	15	18	0.20	64x155	FX32G682#D155
		21.3	44.7	15	15	20	0.20	77x115	FX32G682#E115
	8 200	24.4	51.2	12	15	20	0.20	77x130	FX32G822#E130
	8 400	25.6	53.9	12	14	20	0.20	77x143	FX32G842#E143
	10 000	28.9	60.6	10	15	20	0.20	77x155	FX32G103#E155
	12 000	34.8	73.2	8	13	20	0.20	77x195	FX32G123#E195
	15 000	39.1	82.1	8	10	20	0.20	90x171	FX32G153#F171
	18 000	45.3	95.2	6	9	20	0.20	90x196	FX32G183#F196
	22 000	54.1	113.5*	6	8	20	0.20	90x236	FX32G223#F236
450 VDC Code: 2W Surge Voltage 500 VDC	**1 800**	8.3	17.4	71	73	17	0.20	51x96	FX32W182#C096
	2 200	9.9	20.8	58	60	17	0.20	51x115	FX32W222#C115
	2 700	11.6	24.4	47	49	17	0.20	51x130	FX32W272#C130
	3 300	12.4	26.1	39	41	18	0.20	64x96	FX32W332#D096
	3 900	14.5	30.4	33	35	18	0.20	64x115	FX32W392#D115
	4 700	16.8	35.3	27	29	18	0.20	64x130	FX32W472#D130
	5 600	19.7	41.3	23	25	18	0.20	64x155	FX32W562#D155
		18.4	38.6	23	25	20	0.20	77x115	FX32W562#E115
	6 800	21.3	44.7	19	21	20	0.20	77x130	FX32W682#E130
	8 200	25.1	52.6	16	18	20	0.20	77x155	FX32W822#E155
		26.1	54.8	16	18	20	0.20	77x170	FX32W822#E170
	10 000	29.6	62.1	13	15	20	0.20	90x157	FX32W103#F157
	12 000	33.5	70.3	11	13	20	0.20	90x171	FX32W123#F171
	15 000	39.6	83.1	9	11	20	0.20	90x196	FX32W153#F196
	18 000	46.8	98.3	8	10	20	0.20	90x236	FX32W183#F236

Additional designs on request · Weitere Designs auf Anfrage

Rated VoltageCode (Surge Voltage) V_r [V DC]	Capacitance C_r [µF]	Ripple Current at 85°C/120Hz I_r [A RMS]	Ripple Current at 40°C/120Hz [A RMS]	ESR (typ) at 20°C/100Hz [mΩ]	Zmax at 20°C/10kHz [mΩ]	ESL (typ) [nH]	Dissipation Factor at 20°C/120Hz Tan δ	DxL [mm]	Product Code # = variable value, see fixing code in the product code
500 VDC Code: 2H Surge Voltage 550 VDC	**1 200**	7.2	15.2	92	100	17	0.20	51x96	FX32H122#C096
	1 500	8.7	18.4	74	80	17	0.20	51x115	FX32H152#C115
	1 800	10.0	21.0	53	50	17	0.20	51x130	FX32H182#C130
	2 200	10.8	22.7	40	35	18	0.20	64x96	FX32H222#D096
	2 700	13.5	28.3	37	33	18	0.20	64x130	FX32H272#D130
	3 300	16.0	33.6	36	32	18	0.20	64x155	FX32H332#D155
		15.1	31.6	36	32	20	0.20	77x115	FX32H332#E115
	3 900	17.1	36.0	27	29	20	0.20	77x130	FX32H392#E130
	4 700	19.6	41.2	25	27	20	0.20	77x144	FX32H472#E144
	5 600	22.9	48.1	23	21	20	0.20	77x171	FX32H562#E171
		22.0	46.1	23	21	20	0.20	90x131	FX32H562#F131
	6 800	26.7	56.0	20	18	20	0.20	77x195	FX32H682#E195
		25.9	54.3	20	18	20	0.20	90x157	FX32H682#F157
	8 200	29.4	61.8	17	16	20	0.20	90x171	FX32H822#F171
	10 000	34.4	72.2	15	14	20	0.20	90x196	FX32H103#F196
	12 000	40.6	85.2	13	12	20	0.20	90x236	FX32H123#F236

*Please contact us if load condition exceeds terminals related $I_{r\,max}$ referred on page 13

Additional designs on request · Weitere Designs auf Anfrage

› Ripple Current Multiplier · Wechselstrommultiplikator

Frequency [Hz]	50/60	120	300	1k	≥ 10k
Multiplier	0.80	1.00	1.18	1.34	1.45

Temperature (°C)	40	45	50	55	60	65	70	75	80	85
Multiplier	2.1	2.0	1.9	1.8	1.7	1.5	1.4	1.3	1.1	1.0

Forced cooling – Wind speed [m/sec]	v < 0.25	v ≥ 0.25	v ≥ 0.5	v ≥ 1.0	v ≥ 2.0	v ≥ 3.0
Multiplier	1.00	1.05	1.10	1.15	1.20	1.25

› Life Time Table · Brauchbarkeitsdauer – Tabelle

FX3	Useful life as function of ambient temperature and ripple current											
I_r at 85°C	x 1.0	x 1.1	x 1.2	x 1.3	x 1.4	x 1.5	x 1.6	x 1.7	x 1.8	x 1.9	x 2.0	x 2.1
T_a = 40°C	250	250	250	250	250	250	210	166	128	98	74	55
T_a = 45°C	250	250	250	250	205	166	133	105	81	62	47	
T_a = 50°C	250	224	189	158	130	105	84	66	51	39		
T_a = 55°C	165	141	120	100	82	66	53	42	32			
T_a = 60°C	104	89	75	63	52	42	33	26				
T_a = 65°C	66	56	48	40	32	26						
T_a = 70°C	41	35	30	25	20							
T_a = 75°C	26	22	19	16								
T_a = 80°C	16	14										
T_a = 85°C	10											

khrs

Max. value limited to 250 000 hours.

> Life Time Graph · Brauchbarkeitsdauer – Diagramm

Useful life depending on ambient temperature T_a and ripple current operating conditions I_r versus rated ripple current at the upper category temperature $I_{r,\ 85°C,120Hz}$

Brauchbarkeitsdauer in Abhängigkeit von Umgebungstemperatur T_a und Wechselstrombelastung I_r im Verhältnis zur max. Wechselstrombelastung bei oberer Kategorietemperatur $I_{r,\ 85°C,120Hz}$

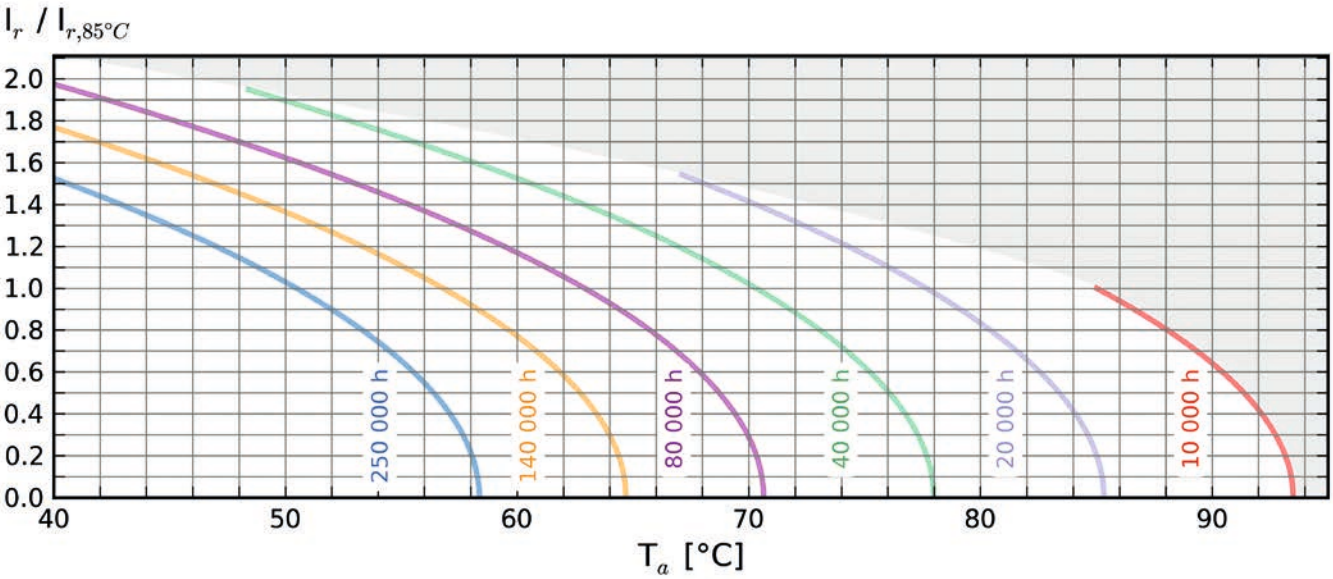

> Life Time Tests and Requirements · Anforderungen Brauchbarkeitsdauer

Life time test	Test procedure	End of Life criteria
Endurance test	T_a = 85°C; V_r, I_r applied 8000 hours	ΔC/C ≤ 10% (of initial value) Tanδ ≤ 175% (of specified value) I_L ≤ specified value
Useful life	T_a = 85°C; V_r, I_r applied 10000 hours	ΔC/C ≤ 15% (of initial value) Tanδ < 200% (of specified value) I_L ≤ specified value

Reference Specification: JIS C 5101-4, JIS C 5102, IEC 60384-4

HCGW · Screw-Terminal · 6000 h/85 °C

High capacitance · Ultra compact

Optional design for permanent and deep charge-discharge application with high voltage hub and pulsed operation mode upon request.

Spezielles Design für häufige und tiefe Lade-, Entladeanwendungen mit hohem Spannungshub und Impulsbetrieb auf Anfrage erhältlich.

› Specifications · Spezifikationen

Items	Characteristics
Temperature range	-10°C ~ + 85°C
Capacitance tolerance (at 20°C)	Standard +/- 20%, -10/+30% on request
Surge voltage	Repetitive max. 30 sec per 6 Minutes
Leakage current max. I_L (20°C, 5 min)	0.01 • C • V_r [µA] or 7 mA, which is smaller.
Useful life	6000 hours at 85°C
Field failure rate	0.5 FIT = 0.5 • 10^{-9} Failures/hour
Reference standards	IEC 60384-4, JIS C 5101-4
Vibration	0.75mm, 10…55Hz, 10g, 3x2h
Outer materials	UL94-V0 / UL224-VW1 certified (cap / sleeve)
Sleeve withstanding voltage	4000 Vac / 1min between terminals bundled and plate*
Product Compliance	RoHS, REACH, Conflict Minerals a.o. – refer to p. 14–15

* Typical value

› Shape designation · Formbezeichnung

- additional information on p. 12–13 · Zusatzinformationen auf S. 12–13
- mounting accessories from p. 219 · Montagezubehör ab S. 219

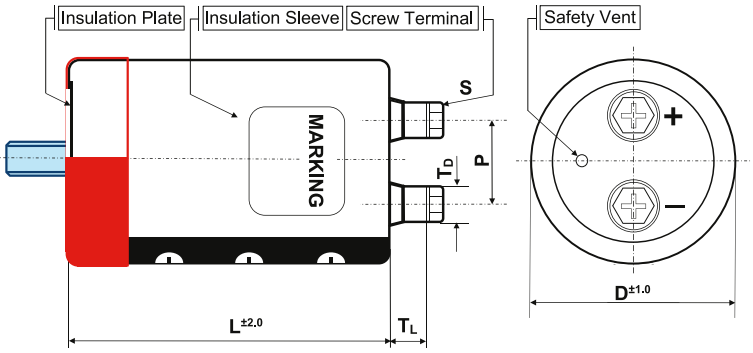

Shape code Features	B Bolt	I / Y / X double sleeve for 2/3/4 points metal Bracket	N standard
outer insulation sleeve	•	•	•
insulation plate	•	•	•
stud bolt	•		
bottom double sleeve		•	

diameter code	ØD	available shape	P	S	T_L	T_D	Cap material
C	51	B, N, I, Y	22.0	M5x10	5.5	10	PH
D	64	B, N, I, Y	28.6	M5x10	5.5	10	PH
E	77	B, N, I, Y	31.5	M5x10	5.0	10	PH
				M6x12	4.5	17.2	PH
F	90	B, N, I, Y	31.5	M5x10	5.0	10	PH
				M6x12	5.0	17.2	PH
G	101	B, N, Y	31.5	M6x12	3.0	14	PH
K	121	N, X	41.5	M6x12	3.0	14	PH

Size in mm. First listed terminal is standard.

> Product Code · Bestellbezeichnung

Example: Series HCGW · 32000 µF +/- 20 % · 400 V · D = 101 mm · L = 237 mm with Y-Bracket

HCGW **2G** **323** **Y** **G** **237** **PH**

- **HCGW**: Series name
- **2G**: Rated voltage code
- **323**: Capacitance code
- **Y**: Shape code
- **G**: Diameter code
- **237**: Case length code – length in mm (3 digits)
- **PH**: Specific features (e.g. M6 …)

Capacitance tolerance:
Ø : ± 20 %
Q : -10 % ~ + 30 %

Rated voltage code			
Code	Voltage	Code	Voltage
2V	350	2W	450
2G	400	2H	500

Rated VoltageCode (Surge Voltage) V_r [V DC]	Capacitance C_r [µF]	Ripple Current at 85°C/120Hz I_r [A RMS]	Ripple Current at 40°C/120Hz [A RMS]	ESR (typ) at 20°C/100Hz [mΩ]	Zmax at 20°C/10kHz [mΩ]	ESL (typ) [nH]	Dissipation Factor at 20°C/120Hz Tan δ	DxL [mm]	Product Code # = variable value, see fixing code in the product code
350 VDC Code: 2V Surge Voltage 400 VDC	**13 000**	12.8	32.0	25	26	22	0.70	77x155	HCGW2V133#E155
	17 000	15.6	39.0	19	20	22	0.70	90x157	HCGW2V173#F157
	18 000	16.6	41.5	18	20	22	0.70	77x195	HCGW2V183#E195
	22 000	19.8	49.5	17	18	22	0.70	77x235	HCGW2V223#E235
	24 000	19.9	49.8	16	18	32	0.70	101x175*	HCGW2V243#G175PH
	25 000	20.7	51.8	15	16	22	0.70	90x196	HCGW2V253#F196
	31 000	24.9	62.3	12	13	22	0.70	90x236	HCGW2V313#F236
		23.9	59.8	12	13	32	0.70	101x195*	HCGW2V313#G195PH
	34 000	26.0	65.0	12	13	22	0.70	90x236	HCGW2V343#F236W2
	36 000	26.8	67.0	11	12	22	0.70	90x236	HCGW2V363#F236W2
		29.0	72.5	11	13	22	0.70	90x283	HCGW2V363#F283
	38 000	29.7	74.3	11	12	22	0.70	90x283	HCGW2V383#F283W2
	39 000	29.0	72.5	10	12	32	0.70	101x237*	HCGW2V393#G237PH
	44 000	33.2	83.0	9	11	32	0.70	101x283*	HCGW2V443#G283PH
	57 000	40.7	101.8**	7	8	32	0.70	121x283	HCGW2V573#K283PH
400 VDC Code: 2G Surge Voltage 450 VDC	**11 000**	11.8	29.5	31	32	22	0.70	77x155	HCGW2G113#E155
	14 000	14.6	36.5	24	25	22	0.70	77x195	HCGW2G143#E195
	15 000	15.8	39.5	23	24	22	0.70	77x220	HCGW2G153#E220
	16 000	16.9	42.3	21	22	22	0.70	77x235	HCGW2G163#E235
		15.2	38.0	21	22	22	0.70	90x157	HCGW2G163#F157
	20 000	18.5	46.3	20	21	22	0.70	90x196	HCGW2G203#F196
	22 000	19.3	48.3	18	19	32	0.70	101x175*	HCGW2G223#G175PH
	25 000	22.4	56.0	16	18	22	0.70	90x236	HCGW2G253#F236
		21.4	53.5	16	18	32	0.70	101x195*	HCGW2G253#G195PH
	27 000	23.8	59.5	15	17	22	0.70	90x221	HCGW2G273#F221
	28 000	23.7	59.3	15	15	22	0.70	90x236	HCGW2G283#F236W2
	29 000	25.3	63.3	14	16	22	0.70	90x236	HCGW2G293#F236
	30 000	24.9	62.3	14	16	32	0.70	101x222*	HCGW2G303#G222PH
	32 000	27.3	68.3	12	13	22	0.70	90x283	HCGW2G323#F283
		26.3	65.8	12	13	32	0.70	101x237*	HCGW2G323#G237PH
	34 000	27.8	69.5	11	13	32	0.70	101x250*	HCGW2G343#G250PH
	38 000	30.8	77.0	10	11	32	0.70	101x283*	HCGW2G383#G283PH
	50 000	38.1	95.3	9	11	32	0.70	121x283	HCGW2G503#K283PH

Additional designs on request · Weitere Designs auf Anfrage

Rated VoltageCode (Surge Voltage) V_r [V DC]	Capacitance C_r [µF]	Ripple Current at 85°C/120Hz I_r [A RMS]	Ripple Current at 40°C/120Hz [A RMS]	ESR (typ) at 20°C/100Hz [mΩ]	Zmax at 20°C/10kHz [mΩ]	ESL (typ) [nH]	Dissipation Factor at 20°C/120Hz Tan δ	DxL [mm]	Product Code # = variable value, see fixing code in the product code
450 VDC Code: 2W Surge Voltage 500 VDC	**3 300**	5.2	13.0	114	118	19	0.70	51x130	HCGW2W332#C130
	5 600	7.5	18.8	67	70	20	0.70	64x130	HCGW2W562#D130
	9 500	10.9	27.3	36	37	22	0.70	77x155	HCGW2W952#E155
	10 000	11.8	27.5	34	35	22	0.70	90x145	HCGW2W103#F145
	12 000	13.5	33.8	28	29	22	0.70	77x195	HCGW2W123#E195
	13 000	13.7	34.3	26	27	22	0.70	90x157	HCGW2W133#F157
	15 000	16.4	41.0	24	27	22	0.70	77x235	HCGW2W153#E235
	17 000	17.1	42.8	21	22	22	0.70	90x196	HCGW2W173#F196
	18 000	17.0	42.5	20	21	32	0.70	101x175*	HCGW2W183#G175PH
		17.9	44.8	20	21	22	0.70	90x196	HCGW2W183#F196
	22 000	20.1	50.3	18	19	32	0.70	101x195*	HCGW2W223#G195PH
		21.0	52.5	18	19	22	0.70	90x236	HCGW2W223#F236
	24 000	22.6	56.5	17	18	22	0.70	90x236	HCGW2W243#F236
	25 000	22.3	55.8	16	17	22	0.70	90x236	HCGW2W253#F236W2
	27 000	25.1	62.8	15	17	22	0.70	90x283	HCGW2W273#F283
		24.1	60.3	15	17	32	0.70	101x237*	HCGW2W273#G237PH
	29 000	25.6	64.0	14	16	32	0.70	101x237*	HCGW2W293#G237PH
	33 000	28.7	71.8	13	15	32	0.70	101x283*	HCGW2W333#G283PH
	42 000	34.9	87.3	10	12	32	0.70	121x283	HCGW2W423#K283PH
500 VDC Code: 2H Surge Voltage 550 VDC	**5 600**	8.4	21.0	60	62	22	0.70	77x155	HCGW2H562#E155
	8 200	11.2	28.0	41	43	22	0.70	77x195	HCGW2H822#E195
		10.8	27.0	41	43	22	0.70	90x157	HCGW2H822#F157
	9 500	13.0	32.5	36	37	22	0.70	77x235	HCGW2H952#E235
	11 000	13.7	34.3	32	33	22	0.70	90x196	HCGW2H113#F196
	12 000	13.5	33.8	30	33	32	0.70	101x175*	HCGW2H123#G175PH
	14 000	16.7	41.8	29	30	22	0.70	90x236	HCGW2H143#F236
		16.0	40.0	29	30	32	0.70	101x195*	HCGW2H143#G195PH
	16 000	19.3	48.3	25	27	22	0.70	90x283	HCGW2H163#F283
		18.6	46.5	25	26	32	0.70	101x237*	HCGW2H163#G237PH
	18 000	18.9	47.3	23	23	22	0.70	90x236	HCGW2H183#F236W2
	20 000	21.5	53.8	20	20	22	0.70	90x283	HCGW2H203#F283W2

* For Bolt mounting, lenght dimensions increase by +3 mm
** Please contact us if load condition exceeds terminals related $I_{r\,max}$ referred on page 13

Additional designs on request · Weitere Designs auf Anfrage

› Ripple Current Multiplier · Wechselstrommultiplikator

Frequency [Hz]	50/60	120	300	1k	≥ 10k
Multiplier	0.70	1.00	1.18	1.34	1.45

Temperature (°C)	40	45	50	55	60	65	70	75	80	85
Multiplier	2.5	2.4	2.3	2.2	2.0	1.8	1.6	1.4	1.2	1.0

Forced cooling – Wind speed [m/sec]	v < 0.25	v ≥ 0.25	v ≥ 0.5	v ≥ 1.0	v ≥ 2.0	v ≥ 3.0
Multiplier	1.00	1.05	1.10	1.15	1.20	1.25

› Life Time Table · Brauchbarkeitsdauer – Tabelle

HCGW	Useful life as function of ambient temperature and ripple current											
I_r at 85°C	x 1.0	x 1.2	x 1.4	x 1.6	x 1.8	x 1.9	x 2.0	x 2.1	x 2.2	x 2.3	x 2.4	x 2.5
T_a = 40°C	250	250	250	203	154	132	112	95	79	66	54	44
T_a = 45°C	245	204	165	128	97	83	71	60	50	41	34	
T_a = 50°C	155	129	104	81	61	52	45	38	31	26		
T_a = 55°C	98	81	66	51	38	33	28	24	20			
T_a = 60°C	62	51	41	32	24	21	18					
T_a = 65°C	39	32	26	20	15							
T_a = 70°C	24	20	16	13								
T_a = 75°C	15	13	10									
T_a = 80°C	9	8										
T_a = 85°C	6		khrs	Max. value limited to 250 000 hours.								

› Life Time Graph · Brauchbarkeitsdauer – Diagramm

Useful life depending on ambient temperature T_a and ripple current operating conditions I_r versus rated ripple current at the upper category temperature $I_{r,\,85°C,120Hz}$

Brauchbarkeitsdauer in Abhängigkeit von Umgebungstemperatur T_a und Wechselstrombelastung I_r im Verhältnis zur max. Wechselstrombelastung bei oberer Kategorietemperatur $I_{r,\,85°C,120Hz}$

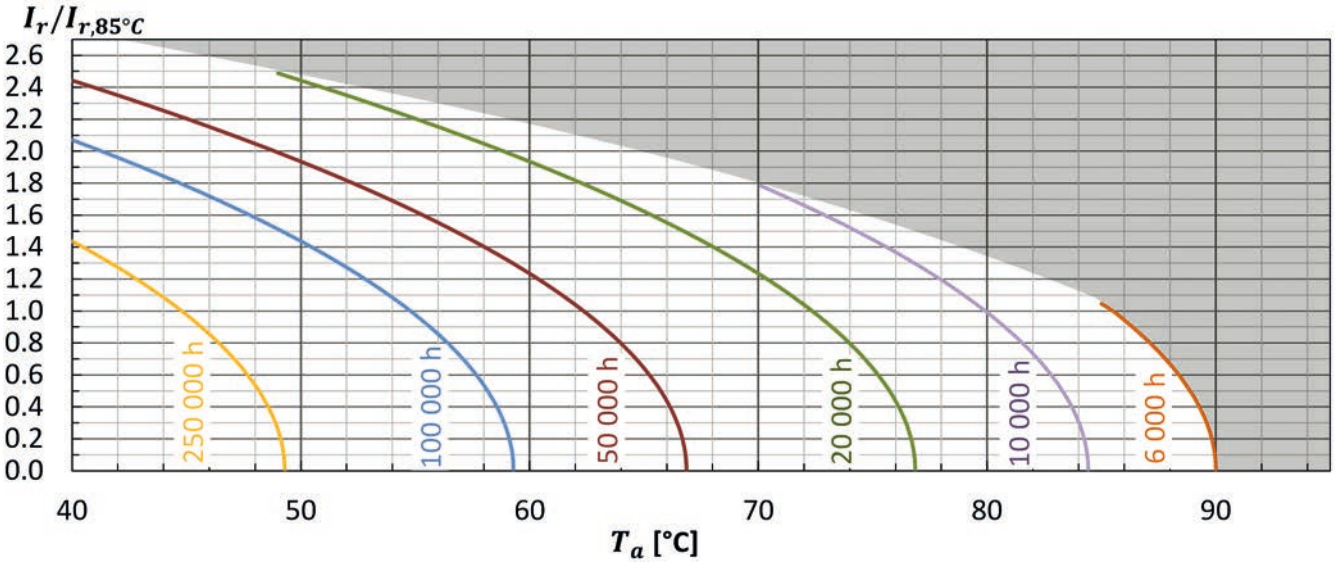

› Life Time Tests and Requirements · Anforderungen Brauchbarkeitsdauer

Life time test	Test procedure	End of Life criteria
Endurance test	T_a = 85°C; V_r, I_r applied 4000 hours	ΔC/C ≤ 10% (of initial value) Tanδ ≤ 175% (of specified value) I_L ≤ specified value
Useful life	T_a = 85°C; V_r, I_r applied 6000 hours	ΔC/C ≤ 15% (of initial value) Tanδ < 200% (of specified value) I_L ≤ specified value

Reference Specification: JIS C 5101-4, JIS C 5102, IEC 60384-4

HCGW2 · Screw-Terminal · 6000 h/85 °C

Higher capacitance · Ultra compact

Optional design for permanent and deep charge-discharge application with high voltage hub and pulsed operation mode upon request.

Spezielles Design für häufige und tiefe Lade-, Entladeanwendungen mit hohem Spannungshub und Impulsbetrieb auf Anfrage erhältlich.

› Specifications · Spezifikationen

Items	Characteristics
Temperature range	-10°C ~ + 85°C
Capacitance tolerance (at 20°C)	Standard +/- 20%, -10/+30% on request
Surge voltage	Repetitive max. 30 sec per 6 Minutes
Leakage current max. I_L (20°C, 5 min)	0.01 • C • V_r [µA] or 7 mA, which is smaller.
Useful life	6000 hours at 85°C
Field failure rate	0.5 FIT = 0.5 • 10^{-9} Failures/hour
Reference standards	IEC 60384-4, JIS C 5101-4
Vibration	0.75mm, 10…55Hz, 10g, 3x2h
Outer materials	UL94-V0 / UL224-VW1 certified (cap / sleeve)
Sleeve withstanding voltage	4000 Vac / 1min between terminals bundled and plate*
Product Compliance	RoHS, REACH, Conflict Minerals a.o. – refer to p. 14–15

* Typical value

› Shape designation · Formbezeichnung

- additional information on p. 12–13 · Zusatzinformationen auf S. 12–13
- mounting accessories from p. 219 · Montagezubehör ab S. 219

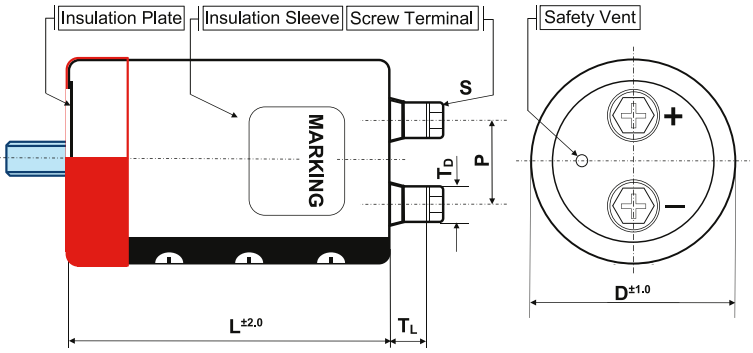

Shape code Features	B Bolt	I / Y double sleeve for 2/3 points metal Bracket	N standard
outer insulation sleeve	•	•	•
insulation plate	•	•	•
stud bolt	•		
bottom double sleeve		•	

diameter code	ØD	available shape	P	S	T_L	T_D	Cap material
E	77	B, N, I, Y	31.5	M6x12	9.0	12	PH
				M5x10	8.0	11	PH
F	90	B, N, I, Y	31.5	M6x12	8.0	12	PH
				M5x10	7.0	11	PH

Size in mm. First listed terminal is standard.

> Product Code · Bestellbezeichnung

Example: Series HCGW2 · 29000 µF · +/- 20 % · 400 V · D=90 mm · L=230 mm with Y-Bracket

HCGW2 **2G** **293** **Y** **F** **230**

- **Series name**
- **Rated voltage code**
- **Capacitance code**
- **Shape code**
- **Diameter code**
- **Capacitance tolerance**: Ø : ± 20 % / Q : -10 % ~ + 30 %
- **Case length code** – length in mm (3 digits)
- **Specific features (e.g. M5 …)**

Rated voltage code			
Code	Voltage	Code	Voltage
2V	350	2W	450
2G	400	2H	500

Rated VoltageCode (Surge Voltage) V_r [V DC]	Capacitance C_r [µF]	Ripple Current at 85°C/120Hz I_r [A RMS]	Ripple Current at 40°C/120Hz [A RMS]	ESR (typ) at 20°C/100Hz [mΩ]	Zmax at 20°C/10kHz [mΩ]	ESL (typ) [nH]	Dissipation Factor at 20°C/120Hz Tan δ	DxL [mm]	Product Code # = variable value, see fixing code in the product code
400 VDC Code: 2G Surge Voltage 450 VDC	**13 000**	13.0	32.5	26	27	20	0.70	77x148	HCGW22G133#E148
	14 000	13.4	33.5	24	25	20	0.70	77x148	HCGW22G143#E148
	16 000	15.5	38.8	21	22	20	0.70	77x188	HCGW22G163#E188
	18 000	16.4	41.0	19	20	20	0.70	90x150	HCGW22G183#F150
	19 000	17.5	43.8	18	20	20	0.70	90x167	HCGW22G193#F167
	20 000	18.8	47.0	17	18	20	0.70	77x228	HCGW22G203#E228
	23 000	19.8	49.5	15	16	20	0.70	90x190	HCGW22G233#F190
	29 000	23.9	59.8	12	13	20	0.70	90x230	HCGW22G293#F230
	33 000	27.5	68.8	10	11	20	0.70	90x268	HCGW22G333#F268
450 VDC Code: 2W Surge Voltage 500 VDC	**7 000**	8.4	21.0	56	52	20	0.70	77x108	HCGW22W702#E108
	10 000	10.9	27.3	40	42	20	0.70	77x148	HCGW22W103#E148
	12 000	12.5	31.3	33	35	20	0.70	77x165	HCGW22W123#E165
	14 000	13.8	34.5	29	30	20	0.70	77x188	HCGW22W143#E188
	15 000	14.3	35.8	27	29	20	0.70	90x150	HCGW22W153#F150
	17 000	15.8	39.5	24	26	20	0.70	90x167	HCGW22W173#F167
	18 000	17.0	42.5	22	23	20	0.70	77x228	HCGW22W183#E228
	20 000	17.6	44.0	20	21	20	0.70	90x190	HCGW22W203#F190
	22 000	19.8	49.5	18	19	20	0.70	90x230	HCGW22W223#F230
	25 000	21.2	53.0	16	17	20	0.70	90x230	HCGW22W253#F230
	30 000	24.9	62.3	13	14	20	0.70	90x268	HCGW22W303#F268
500 VDC Code: 2H Surge Voltage 550 VDC	**7 500**	9.5	23.8	47	48	20	0.70	77x148	HCGW22H752#E148
	9 000	10.9	27.3	40	41	20	0.70	77x165	HCGW22H902#E165
	10 000	11.7	29.3	36	38	20	0.70	77x188	HCGW22H103#E188
	11 000	12.2	30.5	33	34	20	0.70	90x150	HCGW22H113#F150
	13 000	14.5	36.3	28	29	20	0.70	77x228	HCGW22H133#E228
		14.0	35.0	28	29	20	0.70	90x167	HCGW22H133#F167
	15 000	15.3	38.3	24	25	20	0.70	90x190	HCGW22H153#F190
	18 000	18.1	45.3	20	21	20	0.70	90x230	HCGW22H183#F230
	19 000	18.5	46.3	19	20	20	0.70	90x230	HCGW22H193#F230
	22 000	21.3	53.3	16	17	20	0.70	90x268	HCGW22H223#F268

Additional designs on request · Weitere Designs auf Anfrage

› Ripple Current Multiplier · Wechselstrommultiplikator

Frequency [Hz]	50/60	120	300	1k	≥ 10k
Multiplier	0.70	1.00	1.18	1.34	1.45

Temperature (°C)	40	45	50	55	60	65	70	75	80	85
Multiplier	2.5	2.4	2.3	2.2	2.0	1.8	1.6	1.4	1.2	1.0

Forced cooling – Wind speed [m/sec]	v < 0.25	v ≥ 0.25	v ≥ 0.5	v ≥ 1.0	v ≥ 2.0	v ≥ 3.0
Multiplier	1.00	1.05	1.10	1.15	1.20	1.25

› Life Time Table · Brauchbarkeitsdauer – Tabelle

HCGW2	Useful life as function of ambient temperature and ripple current											
I_r at 85°C	x 1.0	x 1.2	x 1.4	x 1.6	x 1.8	x 1.9	x 2.0	x 2.1	x 2.2	x 2.3	x 2.4	x 2.5
T_a = 40°C	250	250	250	203	154	132	112	95	79	66	54	44
T_a = 45°C	245	204	165	128	97	83	71	60	50	41	34	
T_a = 50°C	155	129	104	81	61	52	45	38	31	26		
T_a = 55°C	98	81	66	51	38	33	28	24	20			
T_a = 60°C	62	51	41	32	24	21	18					
T_a = 65°C	39	32	26	20	15							
T_a = 70°C	24	20	16	13								
T_a = 75°C	15	13	10									
T_a = 80°C	9	8										
T_a = 85°C	6		khrs	Max. value limited to 250 000 hours.								

› Life Time Graph · Brauchbarkeitsdauer – Diagramm

Useful life depending on ambient temperature T_a and ripple current operating conditions I_r versus rated ripple current at the upper category temperature $I_{r,\,85°C,120Hz}$

Brauchbarkeitsdauer in Abhängigkeit von Umgebungstemperatur T_a und Wechselstrombelastung I_r im Verhältnis zur max. Wechselstrombelastung bei oberer Kategorietemperatur $I_{r,\,85°C,120Hz}$

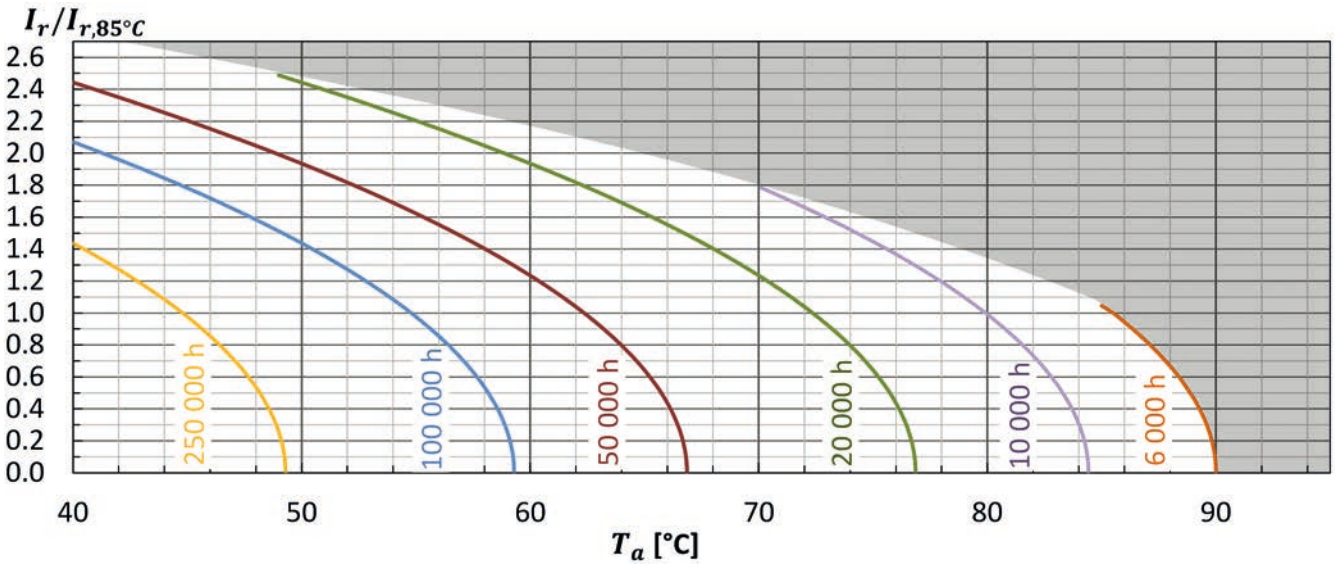

> Life Time Tests and Requirements · Anforderungen Brauchbarkeitsdauer

Life time test	Test procedure	End of Life criteria
Endurance test	T_a = 85°C; V_r, I_r applied 4000 hours	ΔC/C ≤ 10% (of initial value) Tanδ ≤ 175% (of specified value) I_L ≤ specified value
Useful life	T_a = 85°C; V_r, I_r applied 6000 hours	ΔC/C ≤ 15% (of initial value) Tanδ < 200% (of specified value) I_L ≤ specified value

Reference Specification: JIS C 5101-4, JIS C 5102, IEC 60384-4

HCGW3 · Screw-Terminal · 5000 h/70 °C

Highest capacitance · Most Compact

Optional design for permanent and deep charge-discharge application with high voltage hub and pulsed operation mode upon request.

Spezielles Design für häufige und tiefe Lade-, Entladeanwendungen mit hohem Spannungshub und Impulsbetrieb auf Anfrage erhältlich.

› Specifications · Spezifikationen

Items	Characteristics
Temperature range	-10°C ~ + 70°C
Capacitance tolerance (at 20°C)	Standard +/- 20%, -10/+30% on request
Surge voltage	Repetitive max. 30 sec per 6 Minutes
Leakage current max. I_L (20°C, 5 min)	0.01 • C • V_r [µA] or 7 mA, which is smaller.
Useful life	5000 hours at 70°C
Field failure rate	0.5 FIT = 0.5 • 10^{-9} Failures/hour
Reference standards	IEC 60384-4, JIS C 5101-4
Vibration	0.75mm, 10…55Hz, 10g, 3x2h
Outer materials	UL94-V0 / UL224-VW1 certified (cap / sleeve)
Sleeve withstanding voltage	4000 Vac / 1min between terminals bundled and plate*
Product Compliance	RoHS, REACH, Conflict Minerals a.o. – refer to p. 14–15

* Typical value

› Shape designation · Formbezeichnung

- additional information on p. 12–13 · Zusatzinformationen auf S. 12–13
- mounting accessories from p. 219 · Montagezubehör ab S. 219

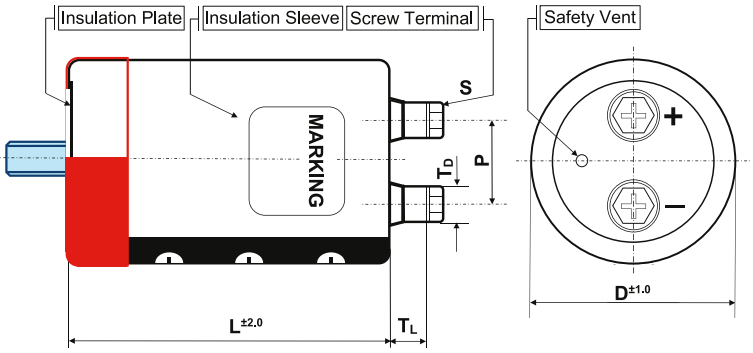

Shape code Features	B Bolt	I / Y double sleeve for 2/3 points metal Bracket	N standard
outer insulation sleeve	•	•	•
insulation plate	•	•	•
stud bolt	•		
bottom double sleeve		•	

diameter code	ØD	available shape	P	S	T_L	T_D	Cap material
E	77	B, N, I, Y	31.5	M6x12	9.0	12	PH
				M5x10	8.0	11	PH
F	90	B, N, I, Y	31.5	M6x12	8.0	12	PH
				M5x10	7.0	11	PH

Size in mm. First listed terminal is standard.

› Product Code · Bestellbezeichnung

Example: Series HCGW3 · 36000 µF · 400 V · D = 90 mm · L = 230mm with Y-Bracket

HCGW3 2G 363 Y F 230

- **HCGW3** – Series name
- **2G** – Rated voltage code
- **363** – Capacitance code
- **Y** – Shape code
- **F** – Diameter code
- **230** – Case length code – length in mm (3 digits)
- Capacitance tolerance: Ø : ± 20 %; Q : -10 % ~ + 30 %
- Specific features

Rated voltage code			
Code	Voltage	Code	Voltage
2V	350	2W	450
2G	400	2H	500

Rated VoltageCode (Surge Voltage) V_r [V DC]	Capacitance C_r [µF]	Ripple Current at 70°C/120Hz I_r [A RMS]	Ripple Current at 40°C/120Hz [A RMS]	ESR (typ) at 20°C/100Hz [mΩ]	Zmax at 20°C/10kHz [mΩ]	ESL (typ) [nH]	Dissipation Factor at 20°C/120Hz Tan δ	DxL [mm]	Product Code # = variable value, see fixing code in the product code
350 VDC Code: 2V Surge Voltage 400 VDC	**19 000**	15.8	36.3	18	19	20	0.70	77x148	HCGW32V193#E148
	21 000	17.3	39.8	16	17	20	0.70	77x165	HCGW32V213#E165
	25 000	19.4	44.6	14	15	20	0.70	77x188	HCGW32V253#E188
	28 000	20.4	46.9	12	13	20	0.70	90x150	HCGW32V283#F150
	30 000	22.0	50.6	12	13	20	0.70	90x167	HCGW32V303#F167
	31 000	23.4	53.8	11	12	20	0.70	77x228	HCGW32V313#E228
	35 000	24.3	55.9	10	11	20	0.70	90x190	HCGW32V353#F190
	44 000	29.5	67.9	8	9	20	0.70	90x230	HCGW32V443#F230
	51 000	34.2	78.7	7	8	20	0.70	90x268	HCGW32V513#F268
400 VDC Code: 2G Surge Voltage 450 VDC	**16 000**	14.5	33.4	21	22	20	0.70	77x148	HCGW32G163#E148
	17 000	15.6	35.9	20	21	20	0.70	77x165	HCGW32G173#E165
	20 000	17.4	40.0	17	18	20	0.70	77x188	HCGW32G203#E188
	22 000	18.2	41.9	16	17	20	0.70	90x150	HCGW32G223#F150
	24 000	19.7	45.3	14	15	20	0.70	90x167	HCGW32G243#F167
	25 000	21.0	48.3	14	15	20	0.70	77x228	HCGW32G253#E228
	29 000	22.1	50.8	12	13	20	0.70	90x190	HCGW32G293#F190
	36 000	26.8	61.6	10	11	20	0.70	90x230	HCGW32G363#F230
	42 000	31.0	71.3	8	9	20	0.70	90x268	HCGW32G423#F268
450 VDC Code: 2W Surge Voltage 500 VDC	**8 600**	9.3	21.4	47	43	20	0.70	77x108	HCGW32W862#E108
	13 000	12.5	28.8	31	32	20	0.70	77x148	HCGW32W133#E148
		13.0	29.9	31	32	20	0.70	90x126	HCGW32W133#F126
	14 000	13.4	30.8	29	29	20	0.70	90x126	HCGW32W143#F126
	15 000	14.0	32.2	27	28	20	0.70	77x165	HCGW32W153#E165
	16 000	14.8	34.0	25	26	20	0.70	90x150	HCGW32W163#F150
	17 000	15.3	35.2	23	25	20	0.70	77x188	HCGW32W173#E188
	18 000	15.7	36.1	22	23	20	0.70	90x150	HCGW32W183#F150
	21 000	17.6	40.5	19	20	20	0.70	90x167	HCGW32W213#F167
	22 000	18.8	43.2	18	19	20	0.70	77x228	HCGW32W223#E228
	25 000	19.6	45.1	16	17	20	0.70	90x190	HCGW32W253#F190
	32 000	24.1	55.4	12	13	20	0.70	90x230	HCGW32W323#F230
	35 000	26.8	61.7	11	12	20	0.70	90x268	HCGW32W353#F268

Additional designs on request · Weitere Designs auf Anfrage

Rated VoltageCode (Surge Voltage) V_r [V DC]	Capacitance C_r [µF]	Ripple Current at 70°C/120Hz I_r [A RMS]	Ripple Current at 40°C/120Hz [A RMS]	ESR (typ) at 20°C/100Hz [mΩ]	Zmax at 20°C/10kHz [mΩ]	ESL (typ) [nH]	Dissipation Factor at 20°C/120Hz Tan δ	DxL [mm]	Product Code # = variable value, see fixing code in the product code
500 VDC Code: 2H Surge Voltage 550 VDC	**10 000**	11.0	25.3	36	37	20	0.70	77x148	HCGW32H103#E148
	12 000	12.5	28.8	30	31	20	0.70	77x165	HCGW32H123#E165
	14 000	13.9	32.0	26	27	20	0.70	77x188	HCGW32H143#E188
	15 000	14.3	32.9	24	25	20	0.70	90x150	HCGW32H153#F150
	17 000	16.5	38.0	21	22	20	0.70	77x228	HCGW32H173#E228
		15.9	36.6	21	22	20	0.70	90x167	HCGW32H173#F167
	20 000	17.6	40.5	18	19	20	0.70	90x190	HCGW32H203#F190
	25 000	21.4	49.2	15	15	20	0.70	90x230	HCGW32H253#F230
	28 000	24.1	55.4	13	13	20	0.70	90x268	HCGW32H283#F268

Additional designs on request · Weitere Designs auf Anfrage

› Ripple Current Multiplier · Wechselstrommultiplikator

Frequency [Hz]	50/60	120	300	1k	≥ 10k
Multiplier	0.70	1.00	1.05	1.10	1.35

Forced cooling – Wind speed [m/sec]	v < 1.0	v ≥ 1.0
Multiplier	1.00	1.10

Ta (°C)	40	45	50	55	60	65	70
Multiplier	2.3	2.2	2.1	1.9	1.7	1.4	1.0

› Life Time Table · Brauchbarkeitsdauer – Tabelle

HCGW3	Useful life as function of ambient temperature and ripple current										
I_r at 70°C	0.0	0.5	1.0	1.2	1.4	1.7	1.9	2.0	2.1	2.2	2.3
T_a = 40°C	123	111	81	68	55	37	27	23	20	16	13
T_a = 45°C	78	70	51	43	34	23	17	15	12	10	
T_a = 50°C	49	44	32	27	22	15	11	9	8		
T_a = 55°C	31	28	20	17	13	9	7				
T_a = 60°C	19	17	13	10	8	6					
T_a = 65°C	12	11	8	6	5						
T_a = 70°C	7	7	5								

khrs

› Life Time Graph · Brauchbarkeitsdauer – Diagramm

Useful life depending on ambient temperature T_a and ripple current operating conditions I_r versus rated ripple current at the upper category temperature $I_{r,\ 70°C,120Hz}$

Brauchbarkeitsdauer in Abhängigkeit von Umgebungstemperatur T_a und Wechselstrombelastung I_r im Verhältnis zur max. Wechselstrombelastung bei oberer Kategorietemperatur $I_{r,\ 70°C,120Hz}$

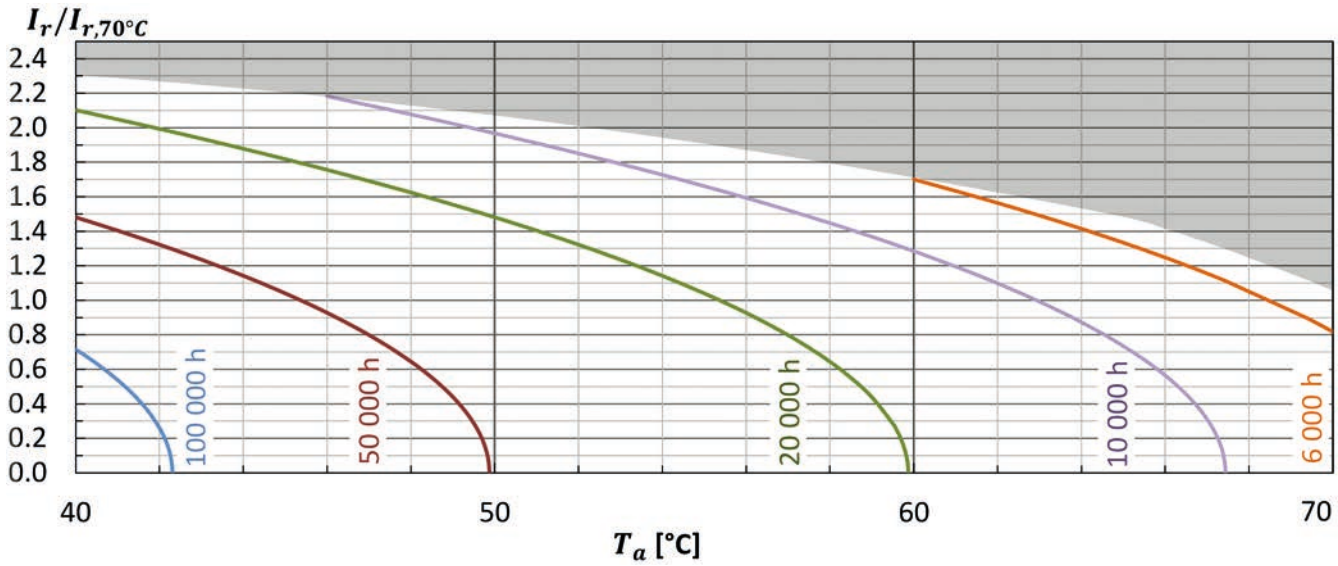

> Life Time Tests and Requirements · Anforderungen Brauchbarkeitsdauer

Life time test	Reference	Test procedure	End of Life criteria
Endurance test	JIS-C-5101-4 JIS-C-5102 IEC 60384-4	T_a = 70°C; V_r, I_r applied 4000 hours	ΔC/C ≤ 10% (of initial value) Tanδ ≤ 175% (of specified value) I_L ≤ specified value
Useful life	JIS-C-5104-4 IEC 60384-4	T_a = 70°C; V_r, I_r applied 5000 hours	ΔC/C ≤ 15% (of initial value) Tanδ < 200% (of specified value) I_L ≤ specified value

Reference Specification: JIS C 5101-4, JIS C 5102, IEC 60384-4

FXW · Screw-Terminal · 12000 h/85 °C

High Capacitance · Ultra compact · Long Life

Optional design for permanent and deep charge-discharge application with high voltage hub and pulsed operation mode upon request.

Spezielles Design für häufige und tiefe Lade-, Entladeanwendungen mit hohem Spannungshub und Impulsbetrieb auf Anfrage erhältlich.

› Specifications · Spezifikationen

Items	Characteristics
Temperature range	-10°C ~ + 85°C
Capacitance tolerance (at 20°C)	Standard +/- 20%, -10/+30% on request
Surge voltage / Ripple voltage	Repetitive max. 30 sec per 6 Minutes / ≤ 50V
Leakage current max. I_L (20°C, 5 min)	0.01 • C • V_r [µA] or 7 mA, which is smaller.
Useful life	12 000 hours at 85°C
Field failure rate	0.5 FIT = 0.5 • 10^{-9} Failures/hour
Reference standards	IEC 60384-4, JIS C 5101-4
Vibration	0.75mm, 10…55Hz, 10g, 3x2h
Outer materials	UL94-V0 / UL224-VW1 certified (cap / sleeve)
Sleeve withstanding voltage	4000 Vac / 1min between terminals bundled and plate*
Product Compliance	RoHS, REACH, Conflict Minerals a.o. – refer to p. 14–15

* Typical value

› Shape designation · Formbezeichnung

- additional information on p. 12–13 · Zusatzinformationen auf S. 12–13
- mounting accessories from p. 219 · Montagezubehör ab S. 219

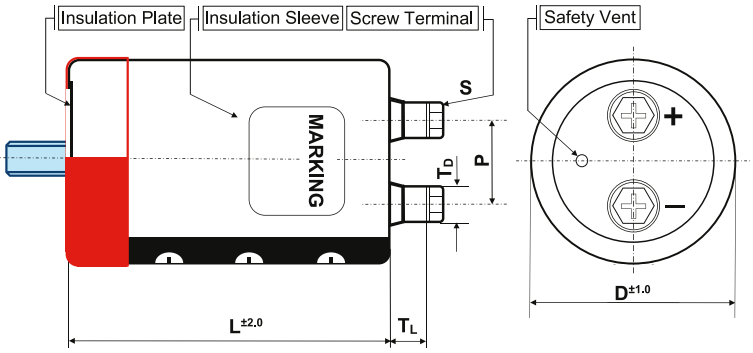

Shape code Features	B Bolt	I / Y / X double sleeve for 2/3/4 points metal Bracket	N standard
outer insulation sleeve	•	•	•
insulation plate	•	•	•
stud bolt	•		
bottom double sleeve		•	

diameter code	ØD	available shape	P	S	T_L	T_D	Cap material
E	77	B, N, I, Y	31.5	M5x10	5.0	10	PH
				M6x12	4.5	17.2	PH
F	90	B, N, I, Y	31.5	M5x10	5.0	10	PH
				M6x12	5.0	17.2	PH
G	101	B, N, Y	31.5	M6x12	3.0	14	PPS

Size in mm. First listed terminal is standard.

> Product Code · Bestellbezeichnung

Example: Series FXW · 20000 µF +/- 20 % · 450 V · D = 101 mm · L = 195 mm with Bolt

FXW	2W	203	B	G		195
Series name		Capacitance code	Shape code	Diameter code	Capacitance tolerance	Specific features (e.g. M6 …)

Capacitance tolerance: Ø : ± 20 % · Q : -10 % ~ + 30 %

Rated voltage code

Code	Voltage	Code	Voltage	Code	Voltage
2V	350	2G	400	2W	450

Case length code – length in mm (3 digits)

Rated VoltageCode (Surge Voltage) V_r [V DC]	Capacitance C_r [µF]	Ripple Current at 85°C/120Hz I_r [A RMS]	Ripple Current at 40°C/120Hz [A RMS]	ESR (typ) at 20°C/100Hz [mΩ]	Zmax at 20°C/10kHz [mΩ]	ESL (typ) [nH]	Dissipation Factor at 20°C/120Hz Tan δ	DxL [mm]	Product Code # = variable value, see fixing code in the product code
350 VDC Code: 2V Surge Voltage 400 VDC	**13 000**	12.8	32.0	25	26	22	0.70	77x155	FXW2V133#E155PH
	17 000	16.1	40.3	19	20	22	0.70	77x195	FXW2V173#E195PH
		15.6	39.0	19	20	22	0.70	90x157	FXW2V173#F157PH
	22 000	19.8	49.5	17	18	22	0.70	77x235	FXW2V223#E235PH
	24 000	20.3	50.8	16	18	22	0.70	90x196	FXW2V243#F196PH
	26 000	23.4	58.5	15	16	22	0.70	77x283	FXW2V263#E283PH
	30 000	24.5	61.3	12	13	22	0.70	90x236	FXW2V303#F236PH
		23.5	58.8	12	13	32	0.70	101x195	FXW2V303#G195PH
	37 000	29.4	73.5	10	12	22	0.70	90x283	FXW2V373#F283PH
	38 000	28.6	71.5	10	12	32	0.70	101x237	FXW2V383#G237PH
	45 000	33.6	84.0	8	10	32	0.70	101x283	FXW2V453#G283PH
400 VDC Code: 2G Surge Voltage 450 VDC	**11 000**	11.8	29.5	31	32	22	0.70	77x155	FXW2G113#E155PH
	13 000	14.1	35.3	26	27	22	0.70	77x195	FXW2G133#E195PH
	15 000	14.7	36.8	23	24	22	0.70	90x157	FXW2G153#F157PH
	16 000	16.9	42.3	21	22	22	0.70	77x235	FXW2G163#E235PH
	19 000	18.1	45.3	21	22	22	0.70	90x196	FXW2G193#F196PH
	22 000	21.5	53.8	18	19	22	0.70	77x283	FXW2G223#E283PH
	24 000	21.9	54.8	17	18	22	0.70	90x236	FXW2G243#F236PH
		21.0	52.5	17	18	32	0.70	101x195	FXW2G243#G195PH
	30 000	26.5	66.3	13	14	22	0.70	90x283	FXW2G303#F283PH
		25.4	63.5	13	14	32	0.70	101x237	FXW2G303#G237PH
	38 000	30.8	77.0	10	11	32	0.70	101x283	FXW2G383#G283PH
450 VDC Code: 2W Surge Voltage 500 VDC	**9 000**	10.6	26.5	38	39	22	0.70	77x155	FXW2W902#E155PH
	11 000	12.9	32.3	31	32	22	0.70	77x195	FXW2W113#E195PH
	12 000	13.1	32.8	28	29	22	0.70	90x157	FXW2W123#F157PH
	14 000	15.8	39.5	25	27	22	0.70	77x235	FXW2W143#E235PH
	16 000	16.6	41.5	23	25	22	0.70	90x196	FXW2W163#F196PH
	19 000	20.0	50.0	20	21	22	0.70	77x283	FXW2W193#E283PH
	20 000	20.0	50.0	19	20	22	0.70	90x236	FXW2W203#F236PH
		19.2	48.0	19	20	32	0.70	101x195	FXW2W203#G195PH
	25 000	23.2	58.0	17	18	32	0.70	101x237	FXW2W253#G237PH
	27 000	25.1	62.8	16	17	22	0.70	90x283	FXW2W273#F283PH
	34 000	29.2	73.0	13	14	32	0.70	101x283	FXW2W343#G283PH

Additional designs on request · Weitere Designs auf Anfrage

› Ripple Current Multiplier · Wechselstrommultiplikator

Frequency [Hz]	50/60	120	300	1k	≥ 10k
Multiplier	0.70	1.00	1.18	1.34	1.45

Temperature (°C)	40	45	50	55	60	65	70	75	80	85
Multiplier	2.5	2.4	2.3	2.2	2.0	1.8	1.6	1.4	1.2	1.0

Forced cooling – Wind speed [m/sec]	v < 0.25	v ≥ 0.25	v ≥ 0.5	v ≥ 1.0	v ≥ 2.0	v ≥ 3.0
Multiplier	1.00	1.05	1.10	1.15	1.20	1.25

› Life Time Table · Brauchbarkeitsdauer – Tabelle

FXW	Useful life as function of ambient temperature and ripple current											
I_r at 85°C	x 1.0	x 1.2	x 1.4	x 1.6	x 1.8	x 1.9	x 2.0	x 2.1	x 2.2	x 2.3	x 2.4	x 2.5
T_a = 40°C	250	250	250	250	250	250	225	190	159	132	108	89
T_a = 45°C	250	250	250	250	194	167	142	120	100	83	68	
T_a = 50°C	250	250	208	163	123	105	90	76	63	52		
T_a = 55°C	196	163	132	103	77	66	56	48	40			
T_a = 60°C	124	103	83	65	49	42	36					
T_a = 65°C	78	65	52	41	31							
T_a = 70°C	49	41	33	26								
T_a = 75°C	31	26	21									
T_a = 80°C	19	16										
T_a = 85°C	12											

khrs Max. value limited to 250 000 hours.

› Life Time Graph · Brauchbarkeitsdauer – Diagramm

Useful life depending on ambient temperature T_a and ripple current operating conditions I_r versus rated ripple current at the upper category temperature $I_{r,\,85°C,120Hz}$

Brauchbarkeitsdauer in Abhängigkeit von Umgebungstemperatur T_a und Wechselstrombelastung I_r im Verhältnis zur max. Wechselstrombelastung bei oberer Kategorietemperatur $I_{r,\,85°C,120Hz}$

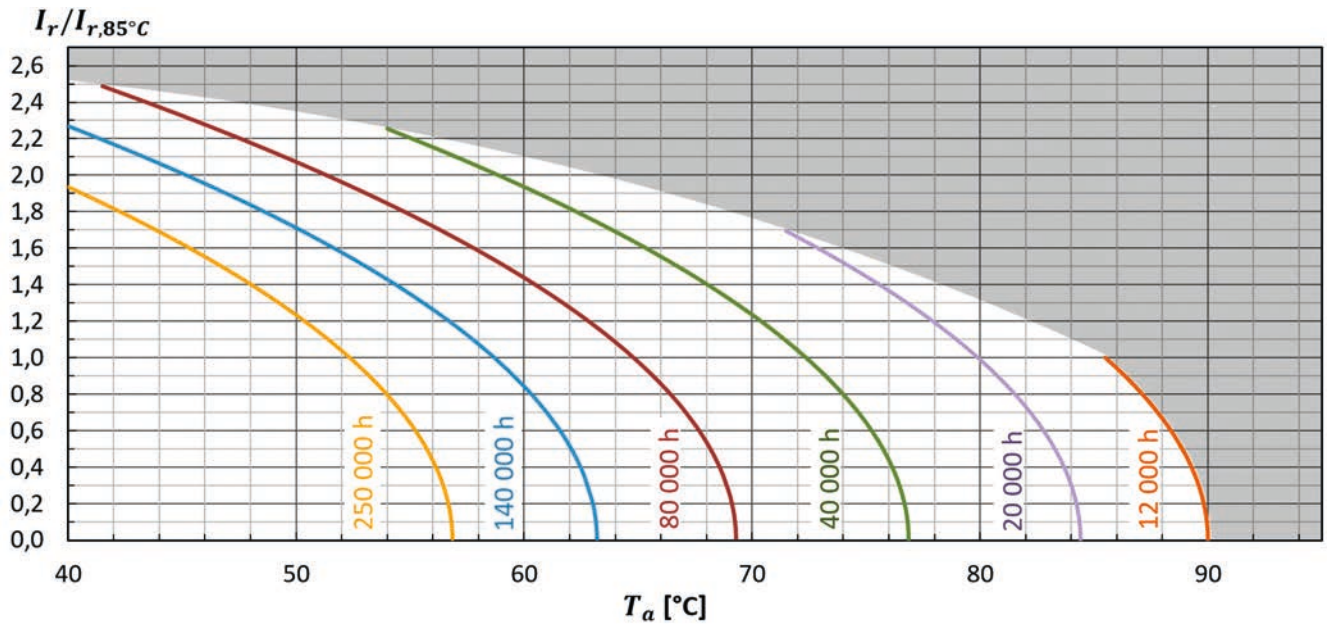

> Life Time Tests and Requirements · Anforderungen Brauchbarkeitsdauer

Life time test	Test procedure	End of Life criteria
Endurance test	T_a = 85°C; V_r, I_r applied 8000 hours	ΔC/C ≤ 10% (of initial value) Tanδ ≤ 175% (of specified value) I_L ≤ specified value
Useful life	T_a = 85°C; V_r, I_r applied 12000 hours	ΔC/C ≤ 15% (of initial value) Tanδ < 200% (of specified value) I_L ≤ specified value

Reference Specification: JIS C 5101-4, JIS C 5102, IEC 60384-4

FXW2 · Screw-Terminal · 12000 h/85 °C

Higher Capacitance · Ultra compact · Long Life

Optional design for permanent and deep charge-discharge application with high voltage hub and pulsed operation mode upon request.

Spezielles Design für häufige und tiefe Lade-, Entladeanwendungen mit hohem Spannungshub und Impulsbetrieb auf Anfrage erhältlich.

› Specifications · Spezifikationen

Items	Characteristics
Temperature range	-10°C ~ + 85°C
Capacitance tolerance (at 20°C)	Standard +/- 20%, -10/+30% on request
Surge voltage / Ripple voltage	Repetitive max. 30 sec per 6 Minutes / ≤ 50V
Leakage current max. I_L (20°C, 5 min)	0.01 • C • V_r [µA] or 7 mA, which is smaller.
Useful life	12 000 hours at 85°C
Field failure rate	0.5 FIT = 0.5 • 10^{-9} Failures/hour
Reference standards	IEC 60384-4, JIS C 5101-4
Vibration	0.75mm, 10…55Hz, 10g, 3x2h
Outer materials	UL94-V0 / UL224-VW1 certified (cap / sleeve)
Sleeve withstanding voltage	4000 Vac / 1min between terminals bundled and plate*
Product Compliance	RoHS, REACH, Conflict Minerals a.o. – refer to p. 14–15

* Typical value

› Shape designation · Formbezeichnung

- additional information on p. 12–13 · Zusatzinformationen auf S. 12–13
- mounting accessories from p. 219 · Montagezubehör ab S. 219

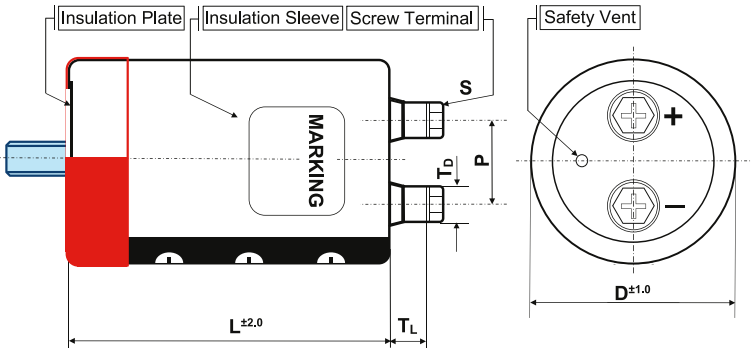

Shape code Features	B Bolt	I / Y double sleeve for 2/3 points metal Bracket	N standard
outer insulation sleeve	•	•	•
insulation plate	•	•	•
stud bolt	•		
bottom double sleeve		•	

diameter code	ØD	available shape	P	S	T_L	T_D	Cap material
E	77	B, N, I, Y	31.5	M6x12	9.0	12	PH
				M5x10	8.0	11	PH
F	90	B, N, I, Y	31.5	M6x12	8.0	12	PH
				M5x10	7.0	11	PH

Size in mm. First listed terminal is standard.

AIC EUROPE GmbH · Sales & technical support of AIC capacitors · Telefon: +49 (0)2151-4943-5 · E-Mail: info@aic-europe.com · www.aic-europe.com

> Product Code · Bestellbezeichnung

Example: Series FXW2 · 17000 µF +/- 20 % · 400 V · D = 77 mm · L = 188 mm with Bolt

FXW2 **2G** **173** **B** **E** **188**

- **FXW2**: Series name
- **2G**: Rated voltage code
- **173**: Capacitance code
- **B**: Shape code
- **E**: Diameter code
- **188**: Case length code – length in mm (3 digits)
- Capacitance tolerance: Ø : ± 20 % / Q : -10 % ~ + 30 %
- Specific features (e.g. M6 …)

Rated voltage code			
Code	Voltage	Code	Voltage
2V	350	2W	450
2G	400	2H	500

Rated VoltageCode (Surge Voltage) V_r [V DC]	Capacitance C_r [µF]	Ripple Current at 85°C/120Hz I_r [A RMS]	Ripple Current at 40°C/120Hz [A RMS]	ESR (typ) at 20°C/100Hz [mΩ]	Zmax at 20°C/10kHz [mΩ]	ESL (typ) [nH]	Dissipation Factor at 20°C/120Hz Tan δ	DxL [mm]	Product Code # = variable value, see fixing code in the product code
350 VDC Code: 2V Surge Voltage 400 VDC	**15 000**	14.0	35.0	23	24	20	0.70	77x148	FXW22V153#E148
	20 000	17.4	43.5	17	18	20	0.70	77x188	FXW22V203#E188
	21 000	17.7	44.3	17	18	20	0.70	90x150	FXW22V213#F150
	25 000	21.0	52.5	14	15	20	0.70	77x228	FXW22V253#E228
	28 000	21.8	54.5	13	14	20	0.70	90x190	FXW22V283#F190
	35 000	26.3	65.8	10	11	20	0.70	90x230	FXW22V353#F230
	42 000	31.0	77.5	8	9	20	0.70	90x268	FXW22V423#F268
400 VDC Code: 2G Surge Voltage 450 VDC	**13 000**	13.0	32.5	26	27	20	0.70	77x148	FXW22G133#E148
	17 000	16.0	40.0	20	21	20	0.70	77x188	FXW22G173#E188
	18 000	16.4	41.0	19	20	20	0.70	90x150	FXW22G183#F150
	21 000	19.3	48.3	17	18	20	0.70	77x228	FXW22G213#E228
	24 000	20.2	50.5	15	16	20	0.70	90x190	FXW22G243#F190
	30 000	24.3	60.8	12	13	20	0.70	90x230	FXW22G303#F230
	34 000	27.8	69.5	10	11	20	0.70	90x268	FXW22G343#F268
450 VDC Code: 2W Surge Voltage 500 VDC	**10 000**	9.1	22.8	40	42	20	0.70	77x148	FXW22W103#E148
	14 000	11.5	28.8	29	30	20	0.70	77x188	FXW22W143#E188
	15 000	11.9	29.8	27	29	20	0.70	90x150	FXW22W153#F150
	17 000	13.8	34.5	24	25	20	0.70	77x228	FXW22W173#E228
	20 000	14.7	36.8	20	21	20	0.70	90x190	FXW22W203#F190
	25 000	17.8	44.5	16	17	20	0.70	90x230	FXW22W253#F230
	30 000	20.8	52.0	13	14	20	0.70	90x268	FXW22W303#F268
500 VDC Code: 2H Surge Voltage 550 VDC	**7 900**	8.6	21.5	45	46	20	0.70	77x148	FXW22H792#E148
	10 000	10.4	26.0	36	38	20	0.70	77x188	FXW22H103#E188
	11 000	10.8	27.0	33	34	20	0.70	90x150	FXW22H113#F150
	13 000	12.8	32.0	28	29	20	0.70	77x228	FXW22H133#E228
	14 000	13.1	32.8	26	27	20	0.70	90x190	FXW22H143#F190
	18 000	16.0	40.0	20	21	20	0.70	90x230	FXW22H183#F230
	22 000	18.9	47.3	16	17	20	0.70	90x268	FXW22H223#F268

Additional designs on request · Weitere Designs auf Anfrage

› Ripple Current Multiplier · Wechselstrommultiplikator

Frequency [Hz]	50/60	120	300	1k	≥ 10k
Multiplier	0.70	1.00	1.18	1.34	1.45

Temperature (°C)	40	45	50	55	60	65	70	75	80	85
Multiplier	2.5	2.4	2.3	2.2	2.0	1.8	1.6	1.4	1.2	1.0

Forced cooling – Wind speed [m/sec]	v < 0.25	v ≥ 0.25	v ≥ 0.5	v ≥ 1.0	v ≥ 2.0	v ≥ 3.0
Multiplier	1.00	1.05	1.10	1.15	1.20	1.25

› Life Time Table · Brauchbarkeitsdauer – Tabelle

FXW2	Useful life as function of ambient temperature and ripple current											
I_r at 85°C	x 1.0	x 1.2	x 1.4	x 1.6	x 1.8	x 1.9	x 2.0	x 2.1	x 2.2	x 2.3	x 2.4	x 2.5
T_a = 40°C	250	250	250	250	250	250	225	190	159	132	108	89
T_a = 45°C	250	250	250	250	194	167	142	120	100	83	68	
T_a = 50°C	250	250	208	163	123	105	90	76	63	52		
T_a = 55°C	196	163	132	103	77	66	56	48	40			
T_a = 60°C	124	103	83	65	49	42	36					
T_a = 65°C	78	65	52	41	31							
T_a = 70°C	49	41	33	26								
T_a = 75°C	31	26	21									
T_a = 80°C	19	16										
T_a = 85°C	12											

khrs Max. value limited to 250 000 hours.

› Life Time Graph · Brauchbarkeitsdauer – Diagramm

Useful life depending on ambient temperature T_a and ripple current operating conditions I_r versus rated ripple current at the upper category temperature $I_{r,\,85°C,120Hz}$

Brauchbarkeitsdauer in Abhängigkeit von Umgebungstemperatur T_a und Wechselstrombelastung I_r im Verhältnis zur max. Wechselstrombelastung bei oberer Kategorietemperatur $I_{r,\,85°C,120Hz}$

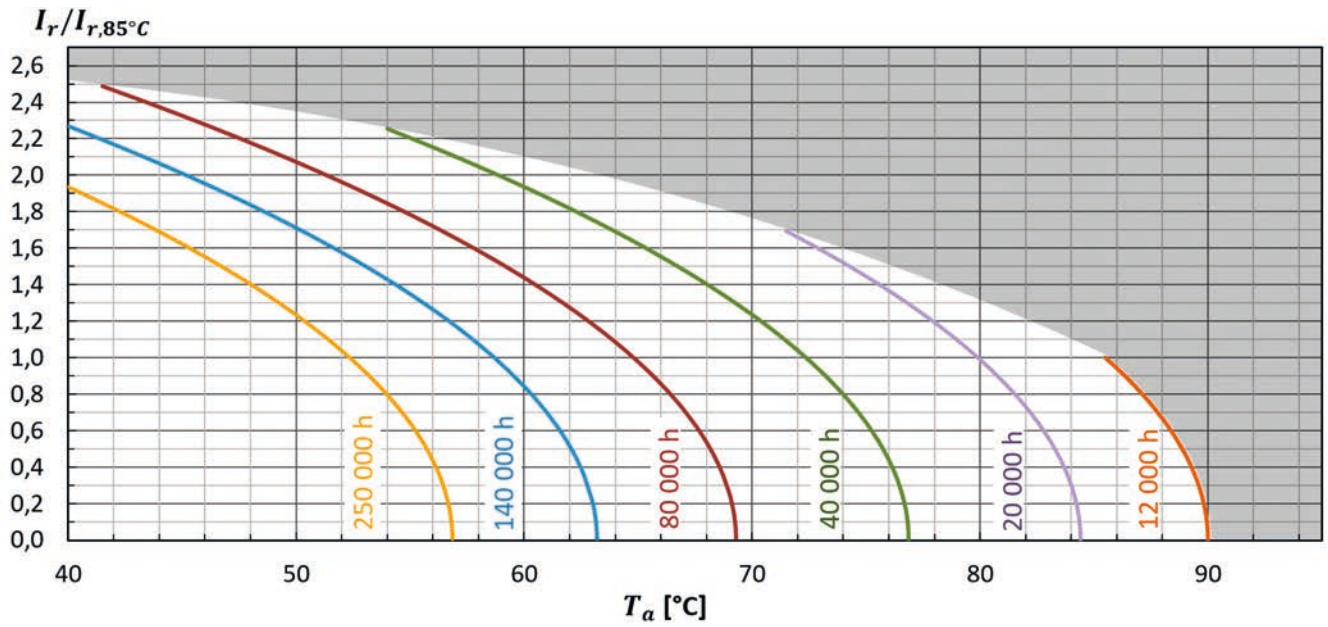

> Life Time Tests and Requirements · Anforderungen Brauchbarkeitsdauer

Life time test	Test procedure	End of Life criteria
Endurance test	T_a = 85°C; V_r, I_r applied 8000 hours	ΔC/C ≤ 10% (of initial value) Tanδ ≤ 175% (of specified value) I_L ≤ specified value
Useful life	T_a = 85°C; V_r, I_r applied 12000 hours	ΔC/C ≤ 15% (of initial value) Tanδ < 200% (of specified value) I_L ≤ specified value

Reference Specification: JIS C 5101-4, JIS C 5102, IEC 60384-4

HCGF5 · Screw-Terminal · 6000 h/85 °C

Standard Performances · Small Diameter Design

Optional design for permanent and deep charge-discharge application with high voltage hub and pulsed operation mode upon request.

Spezielles Design für häufige und tiefe Lade-, Entladeanwendungen mit hohem Spannungshub und Impulsbetrieb auf Anfrage erhältlich.

› Specifications · Spezifikationen

Items	Characteristics
Temperature range	-25°C ~ + 85°C
Capacitance tolerance (at 20°C)	Standard +/- 20%, -10/+30% on request
Surge voltage	Repetitive max. 30 sec per 6 Minutes
Leakage current max. I_L (20°C, 5 min)	0.01 • C • V_r [µA] or 3 mA, which is smaller.
Useful life	6000 hours at 85°C
Field failure rate	0.5 FIT = 0.5 • 10^{-9} Failures/hour
Reference standards	IEC 60384-4, JIS C 5101-4
Vibration	0.75mm, 10…55Hz, 10g, 3x2h
Outer materials	UL94-V0 / UL224-VW1 certified (cap / sleeve)
Sleeve withstanding voltage	4000 Vac / 1min between terminals bundled and plate*
Product Compliance	RoHS, REACH, Conflict Minerals a.o. – refer to p. 14–15

* Typical value

› Shape designation · Formbezeichnung

- additional information on p. 12–13 · Zusatzinformationen auf S. 12–13
- mounting accessories from p. 219 · Montagezubehör ab S. 219

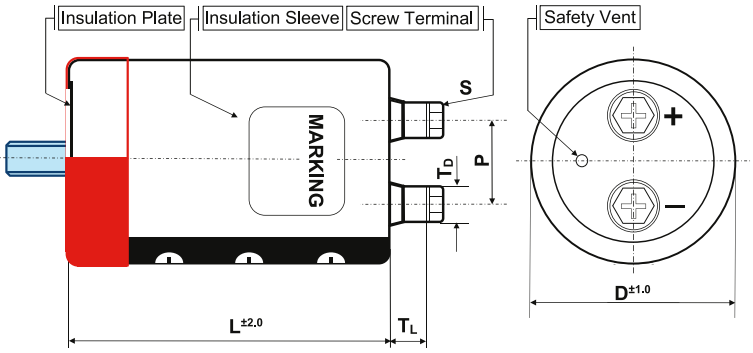

Shape code Features	B Bolt	I / Y double sleeve for 2/3 points metal Bracket	N standard
outer insulation sleeve	•	•	•
insulation plate	•	•	•
stud bolt	•		
bottom double sleeve		•	

diameter code	ØD	available shape	P	S	T_L	T_D	Cap material
A	36	N, I	12.7	M5x10	6.5	8	PH
C	51	B, N, I, Y	22.0	M5x10	5.5	10	PH
D	64	B, N, I, Y	28.6	M5x10	5.5	10	PH
E	77	B, N, I, Y	31.5	M5x10	5.0	10	PH
				M6x12	4.5	17.2	PH
F	90	B, N, I, Y	31.5	M5x10	5.0	10	PH
				M6x12	5.0	17.2	PH
G	101	B, N, Y	31.5	M6x12	3.0	14	PH

Size in mm. First listed terminal is standard.

› Product Code · Bestellbezeichnung

Example: Series HCGF5 · 4700 µF +/- 20 % · 200 V · D = 51 mm · L = 96 mm with Y-Bracket

HCGF5 **2D** **472** **Y** **C** **096** **PH**

- **HCGF5**: Series name
- **2D**: Rated voltage code
- **472**: Capacitance code
- **Y**: Shape code
- **C**: Diameter code
- **096**: Case length code – length in mm (3 digits)
- **PH**: Specific features (e.g. M6 …)

Capacitance tolerance:
Ø : ± 20 %
Q : -10 % ~ + 30 %

Rated voltage code					
Code	Voltage	Code	Voltage	Code	Voltage
2C	160	2D	200	2E	250

Rated VoltageCode (Surge Voltage) V_r [V DC]	Capacitance C_r [µF]	Ripple Current at 85°C/120Hz I_r [A RMS]	Ripple Current at 40°C/120Hz [A RMS]	ESR (typ) at 20°C/100Hz [mΩ]	Zmax at 20°C/10kHz [mΩ]	ESL (typ) [nH]	Dissipation Factor at 20°C/120Hz Tan δ	DxL [mm]	Product Code # = variable value, see fixing code in the product code
160 VDC Code: 2C Surge Voltage 200 VD	**3 300**	6.0	16.2	40	35	15	0.25	36x121	HCGF52C332#A121PH
	3 900	6.1	16.5	37	28	17	0.25	51x75	HCGF52C392#C075PH
	4 700	6.7	18.1	30	25	17	0.25	51x75	HCGF52C472#C075PH
	5 600	8.0	21.6	26	23	17	0.25	51x96	HCGF52C562#C096PH
	6 800	9.0	24.3	22	22	17	0.25	51x96	HCGF52C682#C096PH
	8 200	10.5	28.4	18	19	17	0.25	51x115	HCGF52C822#C115PH
	10 000	12.2	32.9	15	16	17	0.25	51x130	HCGF52C103#C130PH
		12.0	32.4	14	17	18	0.25	64x96	HCGF52C103#D096PH
	12 000	13.0	35.1	12	15	18	0.25	64x96	HCGF52C123#D096PH
	15 000	16.4	44.3	11	12	18	0.25	64x130	HCGF52C153#D130PH
	18 000	17.9	48.3	9	11	18	0.25	64x130	HCGF52C183#D130PH
	22 000	21.0	56.7	8	8	20	0.25	77x130	HCGF52C223#E130PH
	27 000	23.2	62.6	7	8	20	0.25	77x130	HCGF52C273#E130PH
	33 000	27.4	74.0	6	7	20	0.25	90x131	HCGF52C333#F131PH
	39 000	32.1	86.7	5	7	20	0.25	90x157	HCGF52C393#F157PH
	47 000	37.1	100.2**	5	7	20	0.25	77x195	HCGF52C473#E195PH
	50 000	39.2	105.8**	5	7	20	0.25	77x220	HCGF52C503#E220PH
	52 000	40.0	108.0**	5	6	20	0.25	77x220	HCGF52C523#E220PH
		40.3	108.8**	5	6	20	0.25	90x196	HCGF52C523#F196PH
	68 000	42.6	115.0**	4	6	20	0.25	90x203	HCGF52C683#F203PH
	100 000	55.7	150.4**	4	6	29	0.25	101x250*	HCGF52C104#G250PH
200 VDC Code: 2D Surge Voltage 250 VD	**2 200**	4.5	12.2	68	60	15	0.25	36x100	HCGF52D222#A100PH
	2 700	5.4	14.6	48	39	15	0.25	36x121	HCGF52D272#A121PH
	3 300	5.6	15.1	43	35	17	0.25	51x75	HCGF52D332#C075PH
	3 900	6.1	16.5	37	30	17	0.25	51x75	HCGF52D392#C075PH
	4 700	7.4	20.0	30	27	17	0.25	51x96	HCGF52D472#C096PH
	5 600	8.6	23.2	26	25	17	0.25	51x115	HCGF52D562#C115PH
	6 800	10.1	27.3	21	20	17	0.25	51x130	HCGF52D682#C130PH
	8 200	10.8	29.2	17	18	18	0.25	64x96	HCGF52D822#D096PH
	10 000	12.0	32.4	14	14	18	0.25	64x96	HCGF52D103#D096PH
	12 000	13.9	37.5	12	14	20	0.25	77x96	HCGF52D123#E096PH
	15 000	16.6	44.8	10	13	20	0.25	77x96	HCGF52D153#E096PH
	18 000	19.0	51.3	8	12	20	0.25	77x130	HCGF52D183#E130PH

Additional designs on request · Weitere Designs auf Anfrage

Rated VoltageCode (Surge Voltage) V_r [V DC]	Capacitance C_r [µF]	Ripple Current at 85°C/120Hz I_r [A RMS]	Ripple Current at 40°C/120Hz [A RMS]	ESR (typ) at 20°C/100Hz [mΩ]	Zmax at 20°C/10kHz [mΩ]	ESL (typ) [nH]	Dissipation Factor at 20°C/120Hz Tan δ	DxL [mm]	Product Code # = variable value, see fixing code in the product code
200 VDC Code: 2D Surge Voltage 250 VD	**20 000**	21.0	56.7	8	8	20	0.25	77x145	HCGF52D203#E145PH
	22 000	22.5	60.8	7	7	20	0.25	77x155	HCGF52D223#E155PH
	27 000	28.9	78.0	6	7	20	0.25	77x220	HCGF52D273#E220PH
		24.8	67.0	6	7	20	0.25	90x131	HCGF52D273#F131PH
	33 000	29.3	79.1	5	7	20	0.25	90x157	HCGF52D333#F157PH
	39 000	34.7	93.7	5	7	20	0.25	77x220	HCGF52D393#E220PH
	40 000	32.3	87.2	5	7	20	0.25	90x157	HCGF52D403#F157PH
	52 000	40.3	108.8**	5	7	20	0.25	90x196	HCGF52D523#F196PH
250 VDC Code: 2E Surge Voltage 300 VD	**1 500**	3.7	10.0	56	50	15	0.25	36x100	HCGF52E152#A100PH
	1 800	4.0	10.8	52	44	15	0.25	36x100	HCGF52E182#A100PH
	2 200	4.6	12.4	50	40	17	0.25	51x75	HCGF52E222#C075PH
	2 700	5.1	13.8	41	36	17	0.25	51x75	HCGF52E272#C075PH
	3 300	6.2	16.7	36	35	17	0.25	51x96	HCGF52E332#C096PH
	3 900	7.2	19.4	31	30	17	0.25	51x115	HCGF52E392#C115PH
	4 700	8.2	22.1	25	23	18	0.25	64x96	HCGF52E472#D096PH
	5 600	9.0	24.3	21	21	18	0.25	64x96	HCGF52E562#D096PH
	6 800	10.5	28.4	18	18	18	0.25	64x115	HCGF52E682#D115PH
	8 200	11.5	31.0	15	16	18	0.25	64x115	HCGF52E822#D115PH
	10 000	13.5	36.4	12	14	18	0.25	64x130	HCGF52E103#D130PH
		14.7	39.7	12	13	20	0.25	77x148	HCGF52E103#E148PH
	12 000	14.8	40.0	10	11	20	0.25	77x115	HCGF52E123#E115PH
	15 000	17.4	47.0	8	11	20	0.25	77x130	HCGF52E153#E130PH
	18 000	20.4	55.1	7	10	20	0.25	77x155	HCGF52E183#E155PH
	22 000	24.0	64.8	6	8	20	0.25	90x157	HCGF52E223#F157PH
	26 000	26.8	72.4	6	7	20	0.25	77x220	HCGF52E263#E220PH

* For Bolt mounting, lenght dimensions increase by +3 mm
** Please contact us if load condition exceeds terminals related $I_{r\,max}$ referred on page 13

Additional designs on request · Weitere Designs auf Anfrage

> Ripple Current Multiplier · Wechselstrommultiplikator

Frequency [Hz]	50/60	120	300	1k	≥ 10k
Multiplier	0.80	1.00	1.18	1.34	1.45

Temperature (°C)	40	45	50	55	60	65	70	75	80	85
Multiplier	2.7	2.6	2.4	2.2	2.0	1.8	1.6	1.4	1.2	1.0

Forced cooling – Wind speed [m/sec]	v < 0.25	v ≥ 0.25	v ≥ 0.5	v ≥ 1.0	v ≥ 2.0	v ≥ 3.0
Multiplier	1.00	1.05	1.10	1.15	1.20	1.25

› Life Time Table · Brauchbarkeitsdauer – Tabelle

HCGF5	Useful life as function of ambient temperature and ripple current												
I_r at 85°C	x 1.0	x 1.2	x 1.4	x 1.6	x 1.8	x 2.0	x 2.1	x 2.2	x 2.3	x 2.4	x 2.5	x 2.6	x 2.7
T_a = 40°C	250	250	250	199	149	108	91	76	63	51	42	33	27
T_a = 45°C	243	201	162	125	94	68	57	48	39	32	26	21	
T_a = 50°C	153	127	102	79	59	43	36	30	25	20			
T_a = 55°C	97	80	64	50	37	27	23	19					
T_a = 60°C	61	51	41	31	23	17							
T_a = 65°C	38	32	25	20	15								
T_a = 70°C	24	20	16	12									
T_a = 75°C	15	12	10										
T_a = 80°C	9	8											
T_a = 85°C	6												

khrs Max. value limited to 250 000 hours.

› Life Time Graph · Brauchbarkeitsdauer – Diagramm

Useful life depending on ambient temperature T_a and ripple current operating conditions I_r versus rated ripple current at the upper category temperature $I_{r,\,85°C,120Hz}$

Brauchbarkeitsdauer in Abhängigkeit von Umgebungstemperatur T_a und Wechselstrombelastung I_r im Verhältnis zur max. Wechselstrombelastung bei oberer Kategorietemperatur $I_{r,\,85°C,120Hz}$

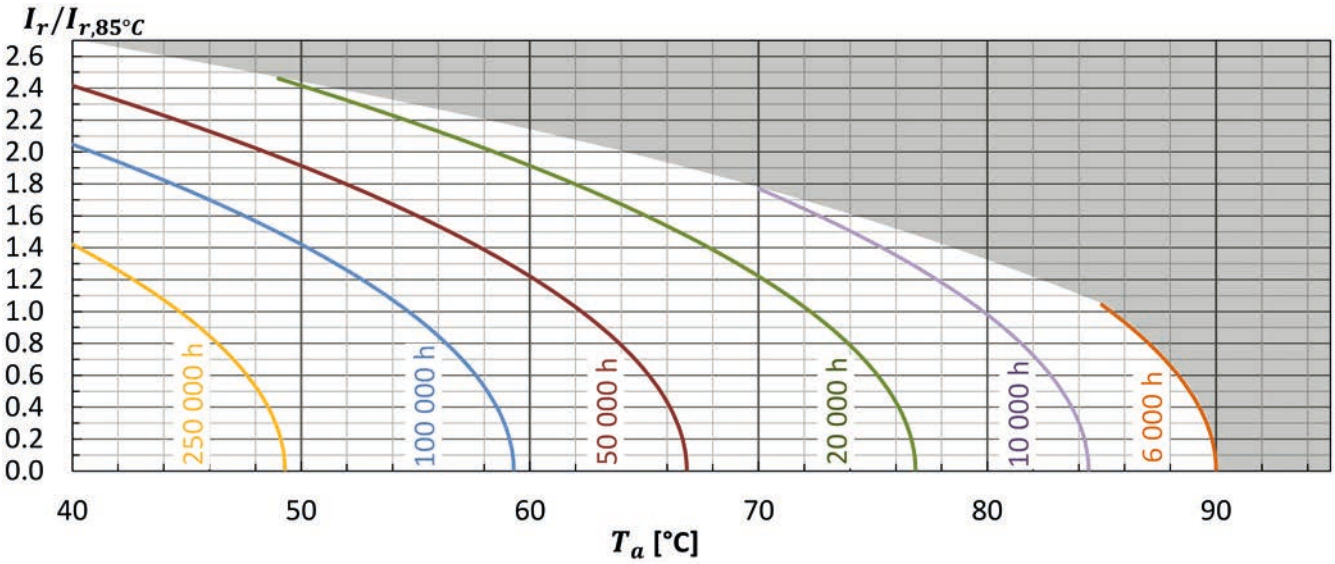

› Life Time Tests and Requirements · Anforderungen Brauchbarkeitsdauer

Life time test	Test procedure	End of Life criteria
Endurance test	T_a = 85°C; V_r, I_r applied 4000 hours	ΔC/C ≤ 10% (of initial value) Tanδ ≤ 175% (of specified value) I_L ≤ specified value
Useful life	T_a = 85°C; V_r, I_r applied 6000 hours	ΔC/C ≤ 15% (of initial value) Tanδ < 200% (of specified value) I_L ≤ specified value

Reference Specification: JIS C 5101-4, JIS C 5102, IEC 60384-4

VFR · Screw-Terminal · 6000 h/85 °C

High Ripple Current · Bottom cooling design · Low ESR

Optional design for permanent and deep charge-discharge application with high voltage hub and pulsed operation mode upon request.

Spezielles Design für häufige und tiefe Lade-, Entladeanwendungen mit hohem Spannungshub und Impulsbetrieb auf Anfrage erhältlich.

› Specifications · Spezifikationen

Items	Characteristics
Temperature range	-40°C ~ + 85°C
Capacitance tolerance (at 20°C)	Standard +/- 20%, -10/+30% on request
Surge voltage / Ripple voltage	Repetitive max. 30 sec per 6 Minutes / ≤ 70V
Leakage current max. I_L (20°C, 5 min)	0.01 • C • V_r [µA] or 5 mA, which is smaller.
Useful life	6000 hours at 85°C
Field failure rate	0.5 FIT = 0.5 • 10^{-9} Failures/hour
Reference standards	IEC 60384-4, JIS C 5101-4
Vibration	0.75mm, 10…55Hz, 10g, 3x2h
Outer materials	UL94-V0 / UL224-VW1 certified (cap / sleeve)
Sleeve withstanding voltage	4000 Vac / 1min between terminals bundled and plate*
Product Compliance	RoHS, REACH, Conflict Minerals a.o. – refer to p. 14–15

* Typical value

› Shape designation · Formbezeichnung

- additional information on p. 12–13 · Zusatzinformationen auf S. 12–13
- mounting accessories from p. 219 · Montagezubehör ab S. 219

Diameter 64 mm to 90 mm

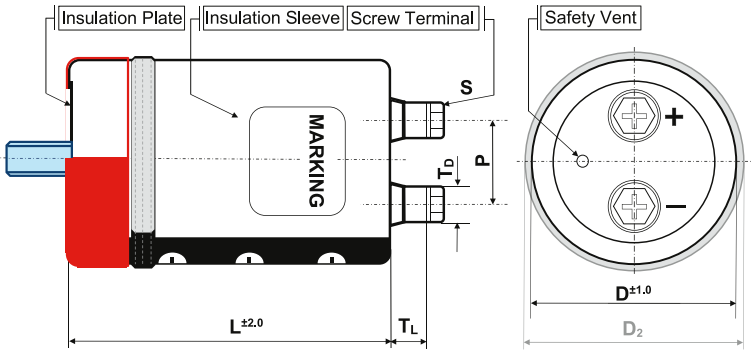

Diameter 51 mm

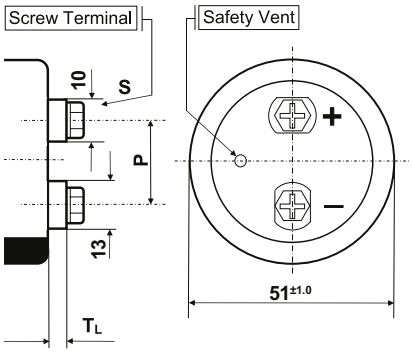

Shape code Features	B Bolt	I/Y double sleeve for 2/3 points metal Bracket	N + suffix WC blank bottom + seating ring	N standard
outer insulation sleeve	•	•	•	•
insulation plate	•	•		•
stud bolt	•			
bottom double sleeve		•		
integrated seating ring			•	

diameter code	ØD	available shape	P	S	T_L	T_D	Cap material
C	51	B, N, I, Y	22.0	M5x10	4.5	13/10	PH
D	64	B, N, I, Y	28.6	M5x10	8.0	11	PH
E	77	B, N, I, Y, WC	31.5	M6x12	9.0	12	PH
F	90	B, N, I, Y, WC	31.5	M6x12	8.0	12	PH

Size in mm

> Product Code · Bestellbezeichnung

Example: Series VFR · 12000 µF +/- 20 % · 400 V · D = 90 mm · L = 167 mm with Y-Bracket

VFR	2G	123	Y	F	167
Series name		Capacitance code	Shape code	Diameter code	Capacitance tolerance / Specific features

Capacitance tolerance: Ø : ± 20 %; Q : -10 % ~ + 30 %

Case length code – length in mm (3 digits)

Rated voltage code			
Code	Voltage	Code	Voltage
2V	350	2W	450
2G	400	2H	500

Rated VoltageCode (Surge Voltage) V_r [V DC]	Capacitance C_r [µF]	Ripple Current at 85°C/120Hz I_r [A RMS]	Ripple Current at 40°C/120Hz [A RMS]	ESR (typ) at 20°C/100Hz [mΩ]	Zmax at 20°C/10kHz [mΩ]	ESL (typ) [nH]	Dissipation Factor at 20°C/120Hz Tan δ	DxL [mm]	Product Code # = variable value, see fixing code in the product code
350 VDC Code: 2V Surge Voltage 400 VDC	**2 200**	10.2	21.5	24	26	17	0.20	51x96	VFR2V222#C096
	2 700	11.0	23.1	20	22	17	0.20	51x96	VFR2V272#C096
	3 300	12.2	25.6	29	30	17	0.20	51x109	VFR2V332#C109
	3 900	13.3	27.9	14	16	17	0.20	51x125	VFR2V392#C125
		17.0	35.7	14	16	18	0.20	64x107	VFR2V392#D107
	4 700	18.9	39.7	11	13	18	0.20	64x107	VFR2V472#D107
	5 600	20.8	43.7	10	11	18	0.20	64x123	VFR2V562#D123
		23.5	49.4	10	11	20	0.20	77x108	VFR2V562#E108
	6 800	23.1	48.5	8	10	18	0.20	64x147	VFR2V682#D147
		26.2	55.0	8	10	20	0.20	77x108	VFR2V682#E108
	8 200	25.4	53.3	7	8	18	0.20	64x164	VFR2V822#D164
		28.7	60.3	7	8	20	0.20	77x124	VFR2V822#E124
		32.6	68.5	7	8	20	0.20	90x110	VFR2V822#F110
	10 000	28.5	59.9	5	7	18	0.20	64x187	VFR2V103#D187
		31.7	66.6	5	7	20	0.20	77x148	VFR2V103#E148
		36.0	75.6	5	7	20	0.20	90x110	VFR2V103#F110
	12 000	34.8	73.1	5	5	20	0.20	77x165	VFR2V123#E165
		39.3	82.5	5	5	20	0.20	90x126	VFR2V123#F126
	15 000	39.3	82.5	4	5	20	0.20	77x188	VFR2V153#E188
		43.6	91.6	4	5	20	0.20	90x150	VFR2V153#F150
	18 000	47.3	99.3	3	4	20	0.20	90x167	VFR2V183#F167
	22 000	52.1	109.4	3	4	20	0.20	90x190	VFR2V223#F190
	27 000	56.0	117.6*	2	3	20	0.20	90x268	VFR2V273#F268
	33 000	57.7	121.2*	2	3	20	0.20	90x268	VFR2V333#F268
400 VDC Code: 2G Surge Voltage 450 VDC	**1 800**	9.5	20.0	30	32	17	0.20	51x96	VFR2G182#C096
	2 200	10.2	21.4	25	27	17	0.20	51x96	VFR2G222#C096
	2 700	11.4	23.9	20	22	17	0.20	51x109	VFR2G272#C109
	3 300	12.7	26.7	16	18	17	0.20	51x125	VFR2G332#C125
		15.7	33.0	16	18	18	0.20	64x107	VFR2G332#D107
	3 900	17.1	35.9	14	16	18	0.20	64x95	VFR2G392#D095
		20.0	42.0	14	16	20	0.20	77x105	VFR2G392#E105

Additional designs on request · Weitere Designs auf Anfrage

Rated VoltageCode (Surge Voltage) V_r [V DC]	Capacitance C_r [µF]	Ripple Current at 85°C/120Hz I_r [A RMS]	Ripple Current at 40°C/120Hz [A RMS]	ESR (typ) at 20°C/100Hz [mΩ]	Zmax at 20°C/10kHz [mΩ]	ESL (typ) [nH]	Dissipation Factor at 20°C/120Hz Tan δ	DxL [mm]	Product Code # = variable value, see fixing code in the product code
400 VDC Code: 2G Surge Voltage 450 VDC	**4 700**	19.0	39.9	11	13	18	0.20	64x123	VFR2G472#D123
		21.5	45.2	11	13	20	0.20	77x108	VFR2G472#E108
	5 600	20.9	43.9	10	11	18	0.20	64x147	VFR2G562#D147
		23.8	50.0	10	11	20	0.20	77x108	VFR2G562#E108
	6 800	23.2	48.7	8	10	18	0.20	64x164	VFR2G682#D164
		26.2	55.0	8	10	20	0.20	77x124	VFR2G682#E124
		29.7	62.4	8	10	20	0.20	90x110	VFR2G682#F110
	8 200	25.8	54.2	7	8	18	0.20	64x187	VFR2G822#D187
		28.7	60.3	7	8	20	0.20	77x148	VFR2G822#E148
		32.6	68.5	7	8	20	0.20	90x110	VFR2G822#F110
	10 000	31.8	66.8	5	7	20	0.20	77x165	VFR2G103#E165
		35.9	75.4	5	7	20	0.20	90x126	VFR2G103#F126
	12 000	35.1	73.7	5	5	20	0.20	77x188	VFR2G123#E188
		39.0	81.9	5	5	20	0.20	90x150	VFR2G123#F150
	15 000	43.2	90.7	4	5	20	0.20	90x167	VFR2G153#F167
	18 000	47.0	98.7	3	4	20	0.20	90x190	VFR2G183#F190
	22 000	50.5	106.1*	3	4	20	0.20	90x268	VFR2G223#F268
	27 000	52.0	109.2*	2	3	20	0.20	90x268	VFR2G273#F268
450 VDC Code: 2W Surge Voltage 500 VDC	**1 500**	9.0	18.9	35	38	17	0.20	51x96	VFR2W152#C096
	1 800	9.7	20.4	30	32	17	0.20	51x96	VFR2W182#C096
	2 200	10.9	22.9	24	26	17	0.20	51x109	VFR2W222#C109
	3 300	16.2	34.0	16	18	18	0.20	64x107	VFR2W332#D107
		16.5	34.7	16	18	18	0.20	64x123	VFR2W332#D123
	3 900	17.8	37.4	14	16	18	0.20	64x123	VFR2W392#D123
		20.1	42.2	14	16	20	0.20	77x108	VFR2W392#E108
	4 700	19.6	41.2	11	13	18	0.20	64x147	VFR2W472#D147
		22.3	46.8	11	13	24	0.20	77x108	VFR2W472#E108
	5 600	21.6	45.4	10	11	18	0.20	64x164	VFR2W562#D164
		24.3	51.0	10	11	20	0.20	77x124	VFR2W562#E124
		27.6	58.0	10	11	20	0.20	90x110	VFR2W562#F110
	6 800	24.1	50.6	8	10	18	0.20	64x187	VFR2W682#D187
		26.8	56.3	8	10	20	0.20	77x148	VFR2W682#E148
		30.4	63.8	8	10	20	0.20	90x110	VFR2W682#F110
	8 200	29.5	62.0	7	8	20	0.20	77x165	VFR2W822#E165
		33.4	70.1	7	8	20	0.20	90x126	VFR2W822#F126
	10 000	32.9	69.1	5	7	20	0.20	77x188	VFR2W103#E188
		36.5	76.7	5	7	20	0.20	90x150	VFR2W103#F150
	12 000	39.6	83.2	5	5	20	0.20	90x167	VFR2W123#F167
	14 000	42.5	89.3	4	5	20	0.20	90x190	VFR2W143#F190
	15 000	44.1	92.6	4	5	20	0.20	90x190	VFR2W153#F190
	17 000	44.5	93.4	4	5	20	0.20	90x230	VFR2W173#F230
	18 000	46.9	98.5	3	4	20	0.20	90x268	VFR2W183#F268
	22 000	48.2	101.2*	3	4	20	0.20	90x268	VFR2W223#F268

Additional designs on request · Weitere Designs auf Anfrage

Rated VoltageCode (Surge Voltage) V_r [V DC]	Capacitance C_r [µF]	Ripple Current at 85°C/120Hz I_r [A RMS]	Ripple Current at 40°C/120Hz [A RMS]	ESR (typ) at 20°C/100Hz [mΩ]	Zmax at 20°C/10kHz [mΩ]	ESL (typ) [nH]	Dissipation Factor at 20°C/120Hz Tan δ	DxL [mm]	Product Code # = variable value, see fixing code in the product code
500 VDC Code: 2H Surge Voltage 550 VDC	**820**	6.1	12.9	71	74	17	0.20	51x96	VFR2H821#C096
	1 000	6.7	14.1	58	61	17	0.20	51x96	VFR2H102#C096
	1 200	7.6	16.0	48	51	17	0.20	51x109	VFR2H122#C109
	1 500	8.7	18.3	40	43	17	0.20	51x125	VFR2H152#C125
	1 800	11.3	23.7	32	35	18	0.20	64x107	VFR2H182#D107
	2 200	12.6	26.5	22	24	18	0.20	64x107	VFR2H222#D107
	2 700	14.0	29.4	22	24	18	0.20	64x123	VFR2H272#D123
		15.9	33.4	22	24	20	0.20	77x108	VFR2H272#E108
	3 300	15.6	32.8	18	20	18	0.20	64x147	VFR2H332#D147
		17.8	37.4	18	20	20	0.20	77x108	VFR2H332#E108
	3 900	17.1	35.9	15	17	18	0.20	64x164	VFR2H392#D164
		19.3	40.5	15	17	20	0.20	77x124	VFR2H392#E124
		21.9	46.0	15	17	20	0.20	90x110	VFR2H392#F110
	4 700	19.0	39.9	13	15	18	0.20	64x187	VFR2H472#D187
		21.2	44.5	13	15	20	0.20	77x148	VFR2H472#E148
		24.0	50.4	13	15	20	0.20	90x110	VFR2H472#F110
	5 600	23.2	48.7	11	13	20	0.20	77x165	VFR2H562#E165
		26.1	54.8	11	13	20	0.20	90x126	VFR2H562#F126
	6 800	25.8	54.2	9	10	20	0.20	77x188	VFR2H682#E188
		28.6	60.1	9	10	20	0.20	90x150	VFR2H682#F150
	8 200	31.1	65.3	8	8	20	0.20	90x167	VFR2H822#F167
	10 000	34.2	71.8	6	7	20	0.20	90x190	VFR2H103#F190
	12 000	36.3	76.2	5	6	20	0.20	90x268	VFR2H123#F268
	15 000	37.8	79.4	4	5	20	0.20	90x268	VFR2H153#F268

* Please contact us if load condition exceeds terminals related $I_{r\,max}$ referred on page 13

Additional designs on request · Weitere Designs auf Anfrage

> Ripple Current Multiplier · Wechselstrommultiplikator

Frequency [Hz]	50/60	120	300	1k	≥ 10k
Multiplier	0.80	1.00	1.18	1.34	1.45

Ta (°C)	40	45	50	55	60	65	70	75	80	85
Multiplier	2.1	2.1	2.0	1.9	1.8	1.6	1.5	1.3	1.1	1.0

Forced cooling – Wind speed [m/sec]	v < 0.25	v ≥ 0.25	v ≥ 0.5	v ≥ 1.0	v ≥ 2.0	v ≥ 3.0
Multiplier	1.00	1.07	1.15	1.25	1.30	1.35

Water cooled heatsink – size ratio [L/D]	1.10	1.25	1.40	1.55	1.70	2.00	2.50	3.00
Multiplier	2.0	1.9	1.7	1.6	1.5	1.4	1.2	1.1

> Life Time Table · Brauchbarkeitsdauer – Tabelle

VFR	Useful life as function of ambient temperature and ripple current											
I_r at 85°C	x 1.0	x 1.1	x 1.2	x 1.3	x 1.4	x 1.5	x 1.6	x 1.7	x 1.8	x 1.9	x 2.0	x 2.1
T_a = 40°C	250	250	250	208	159	120	88	63	45	31	21	14
T_a = 45°C	250	212	169	132	101	75	55	40	28	19	13	8
T_a = 50°C	165	134	107	83	63	48	35	25	18	12	8	
T_a = 55°C	104	85	67	52	40	30	22	16	11	7		
T_a = 60°C	66	53	42	33	25	19	14	10	7			
T_a = 65°C	41	34	27	21	16	12	8					
T_a = 70°C	26	21	17	13	10	7						
T_a = 75°C	16	13	10	8								
T_a = 80°C	10	8										
T_a = 85°C	6											

khrs Max. value limited to 250 000 hours.

> Life Time Graph · Brauchbarkeitsdauer – Diagramm

Useful life depending on ambient temperature T_a and ripple current operating conditions I_r versus rated ripple current at the upper category temperature $I_{r,\,85°C,120Hz}$

Brauchbarkeitsdauer in Abhängigkeit von Umgebungstemperatur T_a und Wechselstrombelastung I_r im Verhältnis zur max. Wechselstrombelastung bei oberer Kategorietemperatur $I_{r,\,85°C,120Hz}$

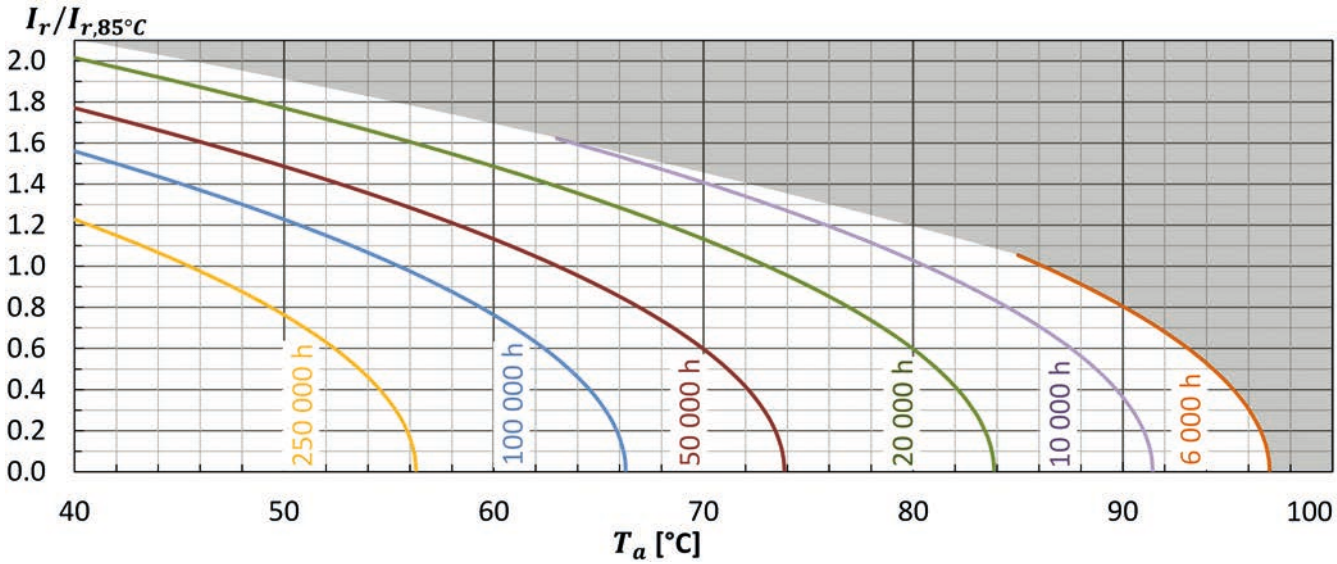

> Life Time Tests and Requirements · Anforderungen Brauchbarkeitsdauer

Life time test	Test procedure	End of Life criteria
Endurance test	T_a = 85°C; V_r, I_r applied 4000 hours	ΔC/C ≤ 10% (of initial value) Tanδ ≤ 175% (of specified value) I_L ≤ specified value
Useful life	T_a = 85°C; V_r, I_r applied 6000 hours	ΔC/C ≤ 15% (of initial value) Tanδ < 200% (of specified value) I_L ≤ specified value

Reference Specification: JIS C 5101-4, JIS C 5102, IEC 60384-4

VFLR · Screw-Terminal · 12000 h/85 °C

Long Life · High Ripple Current · Bottom cooling design · Low ESR

› Specifications · Spezifikationen

Items	Characteristics
Temperature range	-40°C ~ + 85°C
Capacitance tolerance (at 20°C)	Standard +/- 20%, -10/+30% on request
Surge voltage / Ripple voltage	Repetitive max. 30 sec per 6 Minutes / ≤ 70V
Leakage current max. I_L (20°C, 5 min)	0.01 • C • V_r [µA] or 5 mA, which is smaller.
Useful life	12 000 hours at 85°C
Field failure rate	0.5 FIT = 0.5 • 10^{-9} Failures/hour
Reference standards	IEC 60384-4, JIS C 5101-4
Vibration	0.75mm, 10…55Hz, 10g, 3x2h
Outer materials	UL94-V0 / UL224-VW1 certified (cap / sleeve)
Sleeve withstanding voltage	4000 Vac / 1min between terminals bundled and plate*
Product Compliance	RoHS, REACH, Conflict Minerals a.o. – refer to p. 14–15

* Typical value

› Shape designation · Formbezeichnung

- additional information on p. 12–13 · Zusatzinformationen auf S. 12–13
- mounting accessories from p. 219 · Montagezubehör ab S. 219

Diameter 64 mm to 90 mm

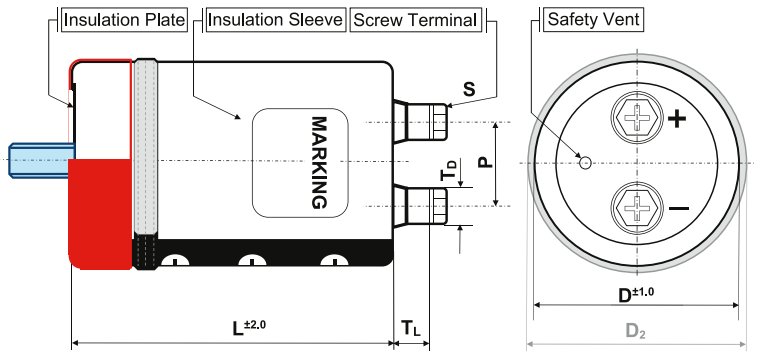

Diameter 51 mm

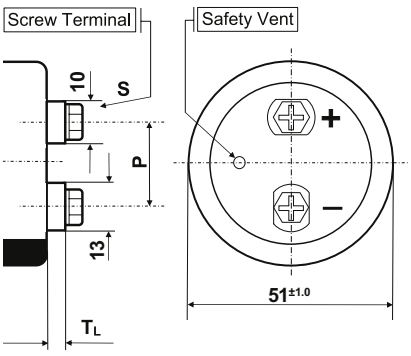

Shape code Features	B Bolt	I / Y double sleeve for 2/3 points metal Bracket	N + suffix WC blank bottom + seating ring	N standard
outer insulation sleeve	•	•	•	•
insulation plate	•	•		•
stud bolt	•			
bottom double sleeve		•		
integrated seating ring			•	

diameter code	ØD	available shape	P	S	T_L	T_D	Cap material
C	51	B, N, I, Y	22.0	M5x10	4.5	13/10	PH
D	64	B, N, I, Y	28.6	M5x10	8.0	11	PH
E	77	B, N, I, Y, WC	31.5	M6x12	9.0	12	PH
F	90	B, N, I, Y, WC	31.5	M6x12	8.0	12	PH

Size in mm

> Product Code · Bestellbezeichnung

Example: Series VFLR · 12000 µF +/- 20 % · 400 V · D = 90 mm · L = 167 mm with Y-Bracket

VFLR **2G** **123** **Y** **F** **167**

- **VFLR**: Series name
- **2G**: Rated voltage code
- **123**: Capacitance code
- **Y**: Shape code
- **F**: Diameter code
- **167**: Case length code – length in mm (3 digits)
- Capacitance tolerance: Ø : ± 20 % / Q : -10 % ~ + 30 %
- Specific features

Rated voltage code			
Code	Voltage	Code	Voltage
2V	350	2W	450
2G	400	2H	500

Rated VoltageCode (Surge Voltage) V_r [V DC]	Capacitance C_r [µF]	Ripple Current at 85°C/120Hz I_r [A RMS]	Ripple Current at 40°C/120Hz [A RMS]	ESR (typ) at 20°C/100Hz [mΩ]	Zmax at 20°C/10kHz [mΩ]	ESL (typ) [nH]	Dissipation Factor at 20°C/120Hz Tan δ	DxL [mm]	Product Code # = variable value, see fixing code in the product code
350 VDC Code: 2V Surge Voltage 400 VDC	**2 700**	11.0	23.1	20	21	17	0.20	51x96	VFLR2V272#C096
		11.4	24.0	20	21	17	0.20	51x109	VFLR2V272#C109
	3 300	12.2	25.6	16	17	17	0.20	51x109	VFLR2V332#C109
	3 900	13.3	27.9	14	16	17	0.20	51x125	VFLR2V392#C125
		17.0	35.7	14	16	18	0.20	64x107	VFLR2V392#D107
	4 700	18.9	39.7	11	12	18	0.20	64x107	VFLR2V472#D107
	5 600	20.8	43.7	10	11	18	0.20	64x123	VFLR2V562#D123
		23.5	49.4	10	11	20	0.20	77x108	VFLR2V562#E108
	6 800	23.1	48.5	8	9	18	0.20	64x147	VFLR2V682#D147
		26.2	55.0	8	9	20	0.20	77x108	VFLR2V682#E108
	8 200	25.4	53.3	7	8	18	0.20	64x164	VFLR2V822#D164
		28.7	60.3	7	8	20	0.20	77x124	VFLR2V822#E124
		32.6	68.5	7	8	20	0.20	90x110	VFLR2V822#F110
	10 000	28.5	59.9	5	6	18	0.20	64x187	VFLR2V103#D187
		31.7	66.6	5	6	20	0.20	77x148	VFLR2V103#E148
		36.0	75.6	5	6	20	0.20	90x110	VFLR2V103#F110
	12 000	34.8	73.1	5	5	20	0.20	77x165	VFLR2V123#E165
		39.3	82.5	5	5	20	0.20	90x126	VFLR2V123#F126
	15 000	39.3	82.5	4	4	20	0.20	77x188	VFLR2V153#E188
		43.6	91.6	4	4	20	0.20	90x150	VFLR2V153#F150
	18 000	47.3	99.3	3	4	20	0.20	90x167	VFLR2V183#F167
	22 000	52.0	109.2*	3	4	20	0.20	90x190	VFLR2V223#F190
	27 000	56.0	117.6*	2	3	20	0.20	90x268	VFLR2V273#F268
	33 000	57.7	121.2*	2	3	20	0.20	90x268	VFLR2V333#F268
400 VDC Code: 2G Surge Voltage 450 VDC	**1 800**	9.5	20.0	30	31	17	0.20	51x96	VFLR2G182#C096
	2 200	10.2	21.4	25	26	17	0.20	51x96	VFLR2G222#C096
	2 700	11.4	23.9	20	21	17	0.20	51x109	VFLR2G272#C109
	3 300	12.7	26.7	16	17	17	0.20	51x125	VFLR2G332#C125
		15.7	33.0	16	17	18	0.20	64x107	VFLR2G332#D107
	3 900	17.2	36.1	14	15	18	0.20	64x107	VFLR2G392#D107

Additional designs on request · Weitere Designs auf Anfrage

Rated VoltageCode (Surge Voltage) V_r [V DC]	Capacitance C_r [µF]	Ripple Current at 85°C/120Hz I_r [A RMS]	Ripple Current at 40°C/120Hz [A RMS]	ESR (typ) at 20°C/100Hz [mΩ]	Zmax at 20°C/10kHz [mΩ]	ESL (typ) [nH]	Dissipation Factor at 20°C/120Hz Tan δ	DxL [mm]	Product Code # = variable value, see fixing code in the product code
400 VDC Code: 2G Surge Voltage 450 VDC	**4 700**	19.0	39.9	11	12	18	0.20	64x123	VFLR2G472#D123
		21.5	45.2	11	12	20	0.20	77x108	VFLR2G472#E108
	5 600	20.9	43.9	10	11	18	0.20	64x147	VFLR2G562#D147
		21.1	44.3	10	11	20	0.20	77x95	VFLR2G562#E095
		24.0	50.4	10	11	20	0.20	77x124	VFLR2G562#E124
	6 800	23.2	48.7	8	10	18	0.20	64x164	VFLR2G682#D164
		26.4	55.4	8	10	20	0.20	77x124	VFLR2G682#E124
		29.7	62.4	8	10	20	0.20	90x110	VFLR2G682#F110
	8 200	25.8	54.2	7	7	18	0.20	64x187	VFLR2G822#D187
		28.7	60.3	7	7	20	0.20	77x148	VFLR2G822#E148
		32.6	68.5	7	7	20	0.20	90x110	VFLR2G822#F110
	10 000	31.8	66.8	5	6	20	0.20	77x165	VFLR2G103#E165
		35.9	75.4	5	6	20	0.20	90x126	VFLR2G103#F126
	12 000	35.1	73.7	5	5	20	0.20	77x188	VFLR2G123#E188
		39.0	81.9	5	5	20	0.20	90x150	VFLR2G123#F150
	15 000	43.2	90.7	4	4	20	0.20	90x167	VFLR2G153#F167
	18 000	47.0	98.7	4	4	20	0.20	90x190	VFLR2G183#F190
	22 000	50.5	106.1*	3	3	20	0.20	90x268	VFLR2G223#F268
	27 000	52.0	109.2*	2	3	20	0.20	90x268	VFLR2G273#F268
450 VDC Code: 2W Surge Voltage 500 VDC	**1 500**	9.0	18.9	35	37	17	0.20	51x96	VFLR2W152#C096
	1 800	10.1	21.3	30	32	17	0.20	51x109	VFLR2W182#C109
	2 200	11.3	23.8	24	26	17	0.20	51x125	VFLR2W222#C125
	2 700	14.5	30.5	20	23	18	0.20	64x107	VFLR2W272#D107
	3 300	16.5	34.7	16	19	18	0.20	64x123	VFLR2W332#D123
	3 900	17.8	37.4	14	15	18	0.20	64x123	VFLR2W392#D123
		20.1	42.2	14	15	20	0.20	77x108	VFLR2W392#E108
	4 700	19.6	41.2	11	12	18	0.20	64x147	VFLR2W472#D147
		22.3	46.8	11	12	20	0.20	77x108	VFLR2W472#E108
	5 600	21.6	45.4	10	11	18	0.20	64x164	VFLR2W562#D164
		24.3	51.0	10	11	20	0.20	77x124	VFLR2W562#E124
		27.6	58.0	10	11	20	0.20	90x110	VFLR2W562#F110
	6 800	22.9	48.1	5	6	18	0.20	64x187	VFLR2W682#D187
		26.8	56.3	5	6	20	0.20	77x148	VFLR2W682#E148
		30.4	63.8	5	6	20	0.20	90x110	VFLR2W682#F110
	8 200	29.9	62.8	7	8	20	0.20	77x188	VFLR2W822#E188
		33.4	70.1	7	8	20	0.20	90x126	VFLR2W822#F126
	10 000	34.1	71.6	5	7	20	0.20	77x228	VFLR2W103#E228
		36.5	76.7	5	7	20	0.20	90x150	VFLR2W103#F150
		36.2	76.0	5	7	20	0.20	90x167	VFLR2W103#F167
	12 000	39.4	82.7	5	5	20	0.20	90x190	VFLR2W123#F190
	13 000	41.0	86.1	5	5	20	0.20	90x190	VFLR2W133#F190
	15 000	43.3	90.9	4	5	20	0.20	90x230	VFLR2W153#F230
	18 000	46.9	98.5	3	4	20	0.20	90x268	VFLR2W183#F268

Additional designs on request · Weitere Designs auf Anfrage

Rated VoltageCode (Surge Voltage) V_r [V DC]	Capacitance C_r [µF]	Ripple Current at 85°C/120Hz I_r [A RMS]	Ripple Current at 40°C/120Hz [A RMS]	ESR (typ) at 20°C/100Hz [mΩ]	Zmax at 20°C/10kHz [mΩ]	ESL (typ) [nH]	Dissipation Factor at 20°C/120Hz Tan δ	DxL [mm]	Product Code # = variable value, see fixing code in the product code
500 VDC Code: 2H Surge Voltage 550 VDC	**820**	6.1	12.9	71	74	17	0.20	51x96	VFLR2H821#C096
	1 000	7.2	15.1	58	61	17	0.20	51x96	VFLR2H102#C096
	1 200	8.0	16.8	48	51	17	0.20	51x109	VFLR2H122#C109
	1 500	9.2	19.3	38	41	17	0.20	51x125	VFLR2H152#C125
	1 800	11.3	23.7	32	35	18	0.20	64x107	VFLR2H182#D107
	2 200	12.6	26.5	26	28	18	0.20	64x107	VFLR2H222#D107
	2 700	14.0	29.4	22	24	18	0.20	64x123	VFLR2H272#D123
		15.9	33.4	22	24	20	0.20	77x108	VFLR2H272#E108
	3 000	14.6	30.7	20	22	18	0.20	64x147	VFLR2H272#D147
	3 300	15.6	32.8	18	19	18	0.20	64x147	VFLR2H332#D147
		17.8	37.4	18	19	20	0.20	77x108	VFLR2H332#E108
	3 900	17.1	35.9	15	16	18	0.20	64x164	VFLR2H392#D164
		19.3	40.5	15	16	20	0.20	77x124	VFLR2H392#E124
		21.9	46.0	15	16	20	0.20	90x110	VFLR2H392#F110
	4 700	19.0	39.9	13	14	18	0.20	64x187	VFLR2H472#D187
		21.2	44.5	13	14	20	0.20	77x148	VFLR2H472#E148
		24.0	50.4	13	14	20	0.20	90x110	VFLR2H472#F110
	5 600	22.8	47.9	11	12	20	0.20	77x148	VFLR2H562#E148
		23.5	49.4	11	12	20	0.20	77x188	VFLR2H562#E188
		26.1	54.8	11	12	20	0.20	90x126	VFLR2H562#F126
	6 800	25.8	54.2	9	10	20	0.20	77x188	VFLR2H682#E188
		28.6	60.1	9	10	20	0.20	90x150	VFLR2H682#F150
	8 200	31.1	65.3	5	6	20	0.20	90x167	VFLR2H822#F167
	10 000	34.2	71.8	5	6	20	0.20	90x190	VFLR2H103#F190
	12 000	36.3	76.2	4	5	20	0.20	90x268	VFLR2H123#F268
	14 000	38.3	80.4	3	3	20	0.20	90x268	VFLR2H143#F268R
	15 000	37.8	79.4	3	3	20	0.20	90x268	VFLR2H153#F268

* Please contact us if load condition exceeds terminals related $I_{r\,max}$ referred on page 13

Additional designs on request · Weitere Designs auf Anfrage

› Ripple Current Multiplier · Wechselstrommultiplikator

Frequency [Hz]	50/60	120	300	1k	≥ 10k
Multiplier	0.80	1.00	1.18	1.34	1.45

Ta (°C)	40	45	50	55	60	65	70	75	80	85
Multiplier	2.1	2.1	2.0	1.9	1.8	1.6	1.5	1.3	1.1	1.0

Forced cooling – Wind speed [m/sec]	v < 0.25	v ≥ 0.25	v ≥ 0.5	v ≥ 1.0	v ≥ 2.0	v ≥ 3.0
Multiplier	1.00	1.07	1.15	1.25	1.30	1.35

Water cooled heatsink – size ratio [L/D]	1.10	1.25	1.40	1.55	1.70	2.00	2.50	3.00
Multiplier	2.0	1.9	1.7	1.6	1.5	1.4	1.2	1.1

› Life Time Table · Brauchbarkeitsdauer – Tabelle

VFLR	Useful life as function of ambient temperature and ripple current											
I_r at 85°C	x 1.0	x 1.1	x 1.2	x 1.3	x 1.4	x 1.5	x 1.6	x 1.7	x 1.8	x 1.9	x 2.0	x 2.1
T_a = 40°C	250	250	250	250	250	240	176	127	90	62	42	28
T_a = 45°C	250	250	250	250	202	151	111	80	57	39	26	17
T_a = 50°C	250	250	214	167	127	96	70	50	36	25	16	
T_a = 55°C	209	170	135	105	80	60	44	32	22	15		
T_a = 60°C	132	107	85	66	51	38	28	20	14			
T_a = 65°C	83	68	54	42	32	24	17					
T_a = 70°C	52	43	34	26	20	15						
T_a = 75°C	33	27	21	16								
T_a = 80°C	21	17										
T_a = 85°C	12											

khrs Max. value limited to 250 000 hours.

› Life Time Graph · Brauchbarkeitsdauer – Diagramm

Useful life depending on ambient temperature T_a and ripple current operating conditions I_r versus rated ripple current at the upper category temperature $I_{r,\,85°C,120Hz}$

Brauchbarkeitsdauer in Abhängigkeit von Umgebungstemperatur T_a und Wechselstrombelastung I_r im Verhältnis zur max. Wechselstrombelastung bei oberer Kategorietemperatur $I_{r,\,85°C,120Hz}$

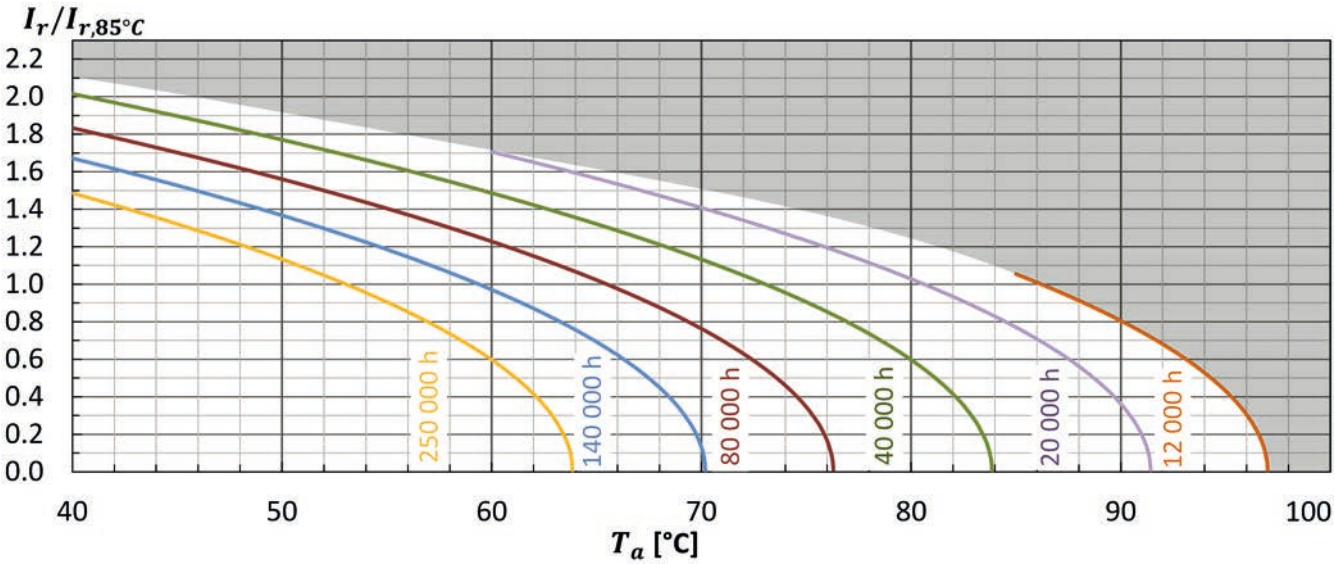

› Life Time Tests and Requirements · Anforderungen Brauchbarkeitsdauer

Life time test	Test procedure	End of Life criteria
Endurance test	T_a = 85°C; V_r, I_r applied 8000 hours	ΔC/C ≤ 10% (of initial value) Tanδ ≤ 175% (of specified value) I_L ≤ specified value
Useful life	T_a = 85°C; V_r, I_r applied 12000 hours	ΔC/C ≤ 15% (of initial value) Tanδ < 200% (of specified value) I_L ≤ specified value

Reference Specification: JIS C 5101-4, JIS C 5102, IEC 60384-4

VG · Screw-Terminal · 6000 h/105 °C

Standard Performances · Bottom cooling design

Optional design for permanent and deep charge-discharge application with high voltage hub and pulsed operation mode upon request.

Spezielles Design für häufige und tiefe Lade-, Entladeanwendungen mit hohem Spannungshub und Impulsbetrieb auf Anfrage erhältlich.

> Specifications · Spezifikationen

Items	Characteristics
Temperature range	-40°C ~ + 105°C
Capacitance tolerance (at 20°C)	Standard +/- 20%, -10/+30% on request
Surge voltage / Ripple voltage	Repetitive max. 30 sec per 6 Minutes / ≤ 50V
Leakage current max. I_L (20°C, 5 min)	0.01 • C • V_r [µA] or 5 mA, which is smaller.
Useful life	6000 hours at 105°C
Field failure rate	0.5 FIT = 0.5 • 10^{-9} Failures/hour
Reference standards	IEC 60384-4, JIS C 5101-4
Vibration	0.75mm, 10…55Hz, 10g, 3x2h
Outer materials	UL94-V0 / UL224-VW1 certified (cap / sleeve)
Sleeve withstanding voltage	4000 Vac / 1min between terminals bundled and plate*
Product Compliance	RoHS, REACH, Conflict Minerals a.o. – refer to p. 14–15

* Typical value

> Shape designation · Formbezeichnung

- additional information on p. 12–13 · Zusatzinformationen auf S. 12–13
- mounting accessories from p. 219 · Montagezubehör ab S. 219

Diameter 64 mm to 90 mm

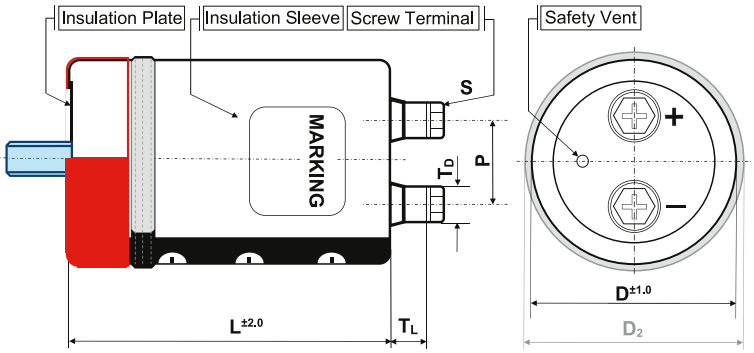

Diameter 51 mm

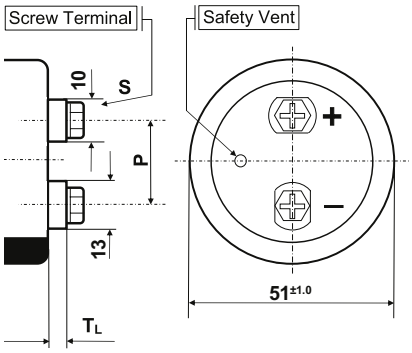

Shape code Features	B Bolt	I/Y double sleeve for 2/3 points metal Bracket	N + suffix WC blank bottom + seating ring	N standard
outer insulation sleeve	•	•	•	•
insulation plate	•	•		•
stud bolt	•			
bottom double sleeve		•		
integrated seating ring			•	

diameter code	ØD	available shape	P	S	T_L	T_D	Cap material
C	51	B, N, I, Y	22.0	M5x10	4.5	13/10	PH
D	64	B, N, I, Y	28.6	M5x10	8.0	11	PH
E	77	B, N, I, Y, WC	31.5	M5x10	8.0	11	PH
				M6x12	9.0	12	PH
F	90	B, N, I, Y, WC	31.5	M5x10	7.0	11	PH
				M6x12	8.0	12	PH

Size in mm. First listed terminal is standard.

AIC EUROPE GmbH · Sales & technical support of AIC capacitors · Telefon: +49 (0)2151-4943-5 · E-Mail: info@aic-europe.com · www.aic-europe.com

> Product Code · Bestellbezeichnung

Example: Series VG · 15000 µF +/- 20 % · 400 V · D = 90 mm · L = 190 mm with Y-Bracket

VG **2G** **153** **Y** **F** **190**

- **VG** – Series name
- **2G** – Rated voltage code
- **153** – Capacitance code
- **Y** – Shape code
- **F** – Diameter code
- **190** – Case length code – length in mm (3 digits)
- Capacitance tolerance: Ø : ± 20 % / Q : -10 % ~ + 30 %
- Specific features (e.g. M6 …)

Rated voltage code					
Code	Voltage	Code	Voltage	Code	Voltage
1E	25	2A	100	2G	400
1V	35	2C	160	2W	450
1H	50	2D	200	2H	500
1J	63	2E	250		
1K	80	2V	350		

Rated VoltageCode (Surge Voltage) V_r [V DC]	Capacitance C_r [µF]	Ripple Current at 105°C/120Hz I_r [A RMS]	Ripple Current at 40°C/120Hz [A RMS]	ESR (typ) at 20°C/100Hz [mΩ]	Zmax at 20°C/10kHz [mΩ]	ESL (typ) [nH]	Dissipation Factor at 20°C/120Hz Tan δ	DxL [mm]	Product Code # = variable value, see fixing code in the product code
25 VDC Code: 1E Surge Voltage 32 VDC	**150 000**	12.9	63.2	6	7	18	0.80	64x94	VG1E154#D094
	180 000	14.1	69.1	5	6	18	0.90	64x107	VG1E184#D107
	220 000	16.0	78.4	4	5	20	1.00	64x123	VG1E224#D123
		14.9	73.0	4	5	20	1.00	77x95	VG1E224#E095
	270 000	16.4	80.4	4	5	20	1.00	77x108	VG1E274#E108
		18.2	89.2	4	5	20	1.00	90x97	VG1E274#F097
	330 000	20.2	99.0	4	5	20	1.00	90x110	VG1E334#F110
35 VDC Code: 1V Surge Voltage 44 VDC	**100 000**	12.3	60.3	6	7	18	0.60	64x94	VG1V104#D094
	120 000	13.4	65.7	6	7	18	0.70	64x107	VG1V124#D107
	150 000	15.4	75.5	5	7	20	0.70	64x123	VG1V154#D123
		14.0	68.6	5	7	20	0.70	77x95	VG1V154#E095
	180 000	15.2	74.5	5	7	20	0.70	77x108	VG1V184#E108
		16.3	79.9	5	7	20	0.70	90x97	VG1V184#F097
	220 000	17.2	84.3	5	7	20	0.70	77x124	VG1V224#E124
		17.9	87.7	5	7	20	0.70	90x110	VG1V224#F110
50 VDC Code: 1H Surge Voltage 63 VDC	**68 000**	11.2	54.9	8	9	18	0.45	64x94	VG1H683#D094
	82 000	12.3	60.3	8	8	18	0.50	64x107	VG1H823#D107
	100 000	13.9	68.1	6	7	18	0.50	64x123	VG1H104#D123
		14.2	69.6	6	7	20	0.50	77x95	VG1H104#E095
	120 000	15.5	76.0	5	7	20	0.50	77x108	VG1H124#E108
	150 000	17.7	86.7	5	7	20	0.50	77x124	VG1H154#E124
		19.2	94.1	5	7	20	0.50	90x97	VG1H154#F097
	180 000	20.9	102.4*	4	6	20	0.50	90x110	VG1H184#F110
63 VDC Code: 1J Surge Voltage 80 VDC	**47 000**	10.5	51.5	8	9	18	0.35	64x94	VG1J473#D094
	56 000	11.5	56.4	8	9	18	0.40	64x107	VG1J563#D107
	68 000	13.0	63.7	7	8	18	0.40	64x123	VG1J683#D123
		12.9	63.2	7	8	20	0.40	77x95	VG1J683#E095

Additional designs on request · Weitere Designs auf Anfrage

Rated VoltageCode (Surge Voltage) V_r [V DC]	Capacitance C_r [µF]	Ripple Current at 105°C/120Hz I_r [A RMS]	Ripple Current at 40°C/120Hz [A RMS]	ESR (typ) at 20°C/100Hz [mΩ]	Zmax at 20°C/10kHz [mΩ]	ESL (typ) [nH]	Dissipation Factor at 20°C/120Hz Tan δ	DxL [mm]	Product Code # = variable value, see fixing code in the product code
63 VDC Code: 1J Surge Voltage 80 VDC	**82 000**	14.1	69.1	7	8	20	0.40	77x108	VG1J823#E108
		15.5	76.0	7	8	20	0.40	90x97	VG1J823#F097
	100 000	16.0	78.4	7	8	20	0.40	77x124	VG1J104#E124
		17.0	83.3	7	8	20	0.40	90x110	VG1J104#F110
80 VDC Code: 1K Surge Voltage 100 VDC	**10 000**	5.2	25.5	15	9	17	0.30	51x75	VG1K103#C075
	27 000	8.6	42.1	8	7	18	0.30	64x94	VG1K273#D094
	33 000	9.5	46.6	7	7	18	0.30	64x107	VG1K333#D107
	47 000	11.7	57.3	6	7	18	0.30	64x123	VG1K473#D123
		12.2	59.8	6	7	20	0.30	77x95	VG1K473#E095
	56 000	13.2	64.7	5	7	20	0.30	77x108	VG1K563#E108
		15.3	75.0	5	7	20	0.30	90x97	VG1K563#F097
	68 000	14.9	73.0	4	7	20	0.30	77x124	VG1K683#E124
		16.8	82.3	4	7	20	0.30	90x110	VG1K683#F110
100 VDC Code: 2A Surge Voltage 125 VDC	**18 000**	8.6	42.1	9	10	18	0.20	64x94	VG2A183#D094
	22 000	9.5	46.6	8	9	18	0.20	64x107	VG2A223#D107
		9.8	48.0	8	9	18	0.20	77x95	VG2A223#E095
	33 000	12.0	58.8	6	7	18	0.25	64x123	VG2A333#D123
		12.1	59.3	6	7	20	0.25	77x95	VG2A333#E095
	39 000	13.1	64.2	5	7	20	0.25	77x108	VG2A393#E108
		11.3	55.4	5	7	20	0.25	90x68	VG2A393#F068
	47 000	14.7	72.0	5	7	20	0.25	77x124	VG2A473#E124
		15.2	74.5	5	7	20	0.25	90x97	VG2A473#F097
	56 000	16.5	80.9	4	6	20	0.25	90x110	VG2A563#F110
160 VDC Code: 2C Surge Voltage 200 VDC	**6 800**	6.4	31.4	22	23	18	0.25	64x94	VG2C682#D094
	8 200	6.4	31.4	18	19	18	0.25	64x94	VG2C822#D094
	10 000	7.0	34.3	15	16	18	0.25	64x107	VG2C103#D107
	15 000	8.9	43.6	14	14	18	0.25	64x123	VG2C153#D123
		9.1	44.6	14	14	20	0.25	77x95	VG2C153#E095
		10.4	51.0	14	14	20	0.25	90x76	VG2C153#F076
	18 000	8.7	42.6	12	12	18	0.25	64x147	VG2C183#D147
		9.9	48.5	12	12	20	0.25	77x108	VG2C183#E108
	22 000	11.2	54.9	10	10	20	0.25	77x124	VG2C223#E124
		12.7	62.2	10	10	20	0.25	90x97	VG2C223#F097
	27 000	12.2	59.8	8	8	20	0.25	77x148	VG2C273#E148
		14.0	68.6	8	8	20	0.25	90x110	VG2C273#F110
	33 000	15.3	75.0	7	7	20	0.25	90x126	VG2C333#F126
200 VDC Code: 2D Surge Voltage 250 VDC	**2 200**	2.8	13.7	68	60	17	0.25	51x75	VG2D222#C075
	6 800	5.3	26.0	21	20	18	0.25	64x94	VG2D682#D094
	10 000	6.4	31.4	14	14	18	0.25	64x110	VG2D103#D110
	12 000	7.2	35.3	12	12	18	0.25	64x123	VG2D123#D123
		8.1	39.7	12	12	20	0.25	77x95	VG2D123#E095
	15 000	7.9	38.7	10	10	18	0.25	64x147	VG2D153#D147
		9.1	44.6	10	10	20	0.25	77x108	VG2D153#E108
		10.5	51.5	10	10	20	0.25	90x97	VG2D153#F097
	18 000	10.2	50.0	8	8	20	0.25	77x124	VG2D183#E124
		11.4	55.9	8	8	20	0.25	90x110	VG2D183#F110

Additional designs on request · Weitere Designs auf Anfrage

Rated VoltageCode (Surge Voltage) V_r [V DC]	Capacitance C_r [µF]	Ripple Current at 105°C/120Hz I_r [A RMS]	Ripple Current at 40°C/120Hz [A RMS]	ESR (typ) at 20°C/100Hz [mΩ]	Zmax at 20°C/10kHz [mΩ]	ESL (typ) [nH]	Dissipation Factor at 20°C/120Hz Tan δ	DxL [mm]	Product Code # = variable value, see fixing code in the product code
250 VDC Code: 2E Surge Voltage 300 VDC	**4 700**	4.4	21.6	25	23	18	0.25	64x94	VG2E472#D094
	5 600	4.8	23.5	21	20	18	0.25	64x107	VG2E562#D107
	8 200	6.0	29.4	15	15	18	0.25	64x123	VG2E822#D123
		6.7	32.8	15	15	20	0.25	77x95	VG2E822#E095
	10 000	6.5	31.9	13	13	18	0.25	64x147	VG2E103#D147
		7.4	36.3	13	13	20	0.25	77x108	VG2E103#E108
	12 000	8.3	40.7	11	11	20	0.25	77x124	VG2E123#E124
		9.4	46.1	11	11	20	0.25	90x97	VG2E123#F097
	15 000	9.1	44.6	9	9	20	0.25	77x148	VG2E153#E148
		10.3	50.5	9	9	20	0.25	90x126	VG2E153#F126
350 VDC Code: 2V Surge Voltage 400 VDC	**1 800**	5.6	15.2	59	70	17	0.20	51x75	VG2V182#C075
	2 200	6.5	17.6	48	57	17	0.20	51x96	VG2V222#C096
	2 700	7.5	20.3	39	47	17	0.20	51x109	VG2V272#C109
	3 300	8.6	23.3	32	38	17	0.20	51x125	VG2V332#C125
		11.2	30.2	32	38	20	0.20	77x95	VG2V332#E095
		12.5	33.8	26	32	20	0.20	77x102	VG2V332#E102R
	3 900	10.5	28.4	27	32	18	0.20	64x94	VG2V392#D094
	4 700	11.9	32.1	22	23	18	0.20	64x107	VG2V472#D107
	5 600	13.0	35.1	20	21	18	0.20	64x123	VG2V562#D123
		14.6	39.4	20	21	20	0.20	77x95	VG2V562#E095
	6 800	14.1	38.1	18	18	18	0.20	64x147	VG2V682#D147
		16.0	43.2	18	18	20	0.20	77x108	VG2V682#E108
		17.3	46.7	16	18	20	0.20	77x139	VG2V682#E139R
		18.5	50.0	18	18	20	0.20	90x97	VG2V682#F097
	8 200	15.9	42.9	15	17	18	0.20	64x187	VG2V822#D187
		18.0	48.6	15	17	20	0.20	77x124	VG2V822#E124
		20.2	54.5	15	17	20	0.20	90x110	VG2V822#F110
	10 000	19.5	52.7	12	15	20	0.20	77x148	VG2V103#E148
		22.1	59.7	12	15	20	0.20	90x126	VG2V103#F126
	12 000	21.8	58.9	10	13	20	0.20	77x188	VG2V123#E188
		24.1	65.1	10	13	20	0.20	90x150	VG2V123#F150
	15 000	25.2	68.0	8	11	20	0.20	77x228	VG2V153#E228
		26.5	71.6	8	11	20	0.20	90x167	VG2V153#F167
	18 000	29.3	79.1	6	9	20	0.20	90x190	VG2V183#F190
	22 000	31.5	85.1	5	7	20	0.20	90x230	VG2V223#F230
	27 000	34.4	92.9	4	6	20	0.20	90x268	VG2V273#F268
400 VDC Code: 2G Surge Voltage 450 VDC	**1 500**	5.2	14.1	66	77	17	0.20	51x75	VG2G152#C075
	1 800	6.0	16.2	55	65	17	0.20	51x96	VG2G182#C096
	2 200	7.0	18.9	45	53	17	0.20	51x109	VG2G222#C109
	2 700	8.0	21.6	37	43	17	0.20	51x125	VG2G272#C125
		8.8	23.8	38	40	18	0.20	64x94	VG2G272#D094
	3 300	9.7	26.2	30	35	18	0.20	64x94	VG2G332#D094
	3 900	10.8	29.2	27	32	18	0.20	64x107	VG2G392#D107
		12.3	33.2	27	32	18	0.20	77x105	VG2G392#E105

Additional designs on request · Weitere Designs auf Anfrage

Rated VoltageCode (Surge Voltage) V_r [V DC]	Capacitance C_r [µF]	Ripple Current at 105°C/120Hz I_r [A RMS]	Ripple Current at 40°C/120Hz [A RMS]	ESR (typ) at 20°C/100Hz [mΩ]	Zmax at 20°C/10kHz [mΩ]	ESL (typ) [nH]	Dissipation Factor at 20°C/120Hz Tan δ	DxL [mm]	Product Code # = variable value, see fixing code in the product code
400 VDC Code: 2G Surge Voltage 450 VDC	**4 700**	11.9	32.1	22	23	18	0.20	64x123	VG2G472#D123
		13.3	35.9	22	23	20	0.20	77x95	VG2G472#E095
	5 600	12.8	34.6	20	21	18	0.20	64x147	VG2G562#D147
		14.5	39.2	20	21	20	0.20	77x108	VG2G562#E108
		16.8	45.4	20	21	20	0.20	90x97	VG2G562#F097
	6 800	14.5	39.2	18	18	18	0.20	64x187	VG2G682#D187
		16.4	44.3	18	18	20	0.20	77x124	VG2G682#E124
		16.5	44.6	18	18	20	0.20	90x93	VG2G682#F093
		18.4	49.7	18	18	20	0.20	90x110	VG2G682#F110
	8 200	18.0	48.6	15	17	20	0.20	77x165	VG2G822#E165
		20.0	54.0	15	17	20	0.20	90x126	VG2G822#F126
	10 000	19.9	53.7	12	15	20	0.20	77x188	VG2G103#E188
		22.0	59.4	12	15	20	0.20	90x150	VG2G103#F150
	12 000	23.7	64.0	10	13	20	0.20	90x167	VG2G123#F167
	15 000	26.7	72.1	8	11	20	0.20	90x190	VG2G153#F190
	18 000	28.5	77.0	7	9	20	0.20	90x230	VG2G183#F230
	22 000	31.1	84.0	6	7	20	0.20	90x268	VG2G223#F268
450 VDC Code: 2W Surge Voltage 500 VDC	**1 000**	4.5	12.2	114	114	17	0.20	51x75	VG2W102#C075
	1 200	5.2	14.1	95	95	17	0.20	51x96	VG2W122#C096
	1 500	5.9	16.0	76	76	17	0.20	51x109	VG2W152#C109
	1 800	6.6	17.9	63	63	17	0.20	51x125	VG2W182#C125
	2 700	9.0	24.3	42	42	18	0.20	64x94	VG2W272#D094
	3 300	10.2	27.5	35	40	18	0.20	64x107	VG2W332#D107
		11.4	30.8	35	40	20	0.20	77x95	VG2W332#E095
	3 900	10.9	29.4	27	32	18	0.20	64x147	VG2W392#D147
		12.4	33.5	27	32	20	0.20	77x108	VG2W392#E108
	4 700	12.2	32.9	24	27	18	0.20	64x164	VG2W472#D164
		13.9	37.5	24	27	20	0.20	77x124	VG2W472#E124
		15.8	42.7	24	27	20	0.20	90x97	VG2W472#F097
	5 600	14.9	40.2	24	23	20	0.20	77x148	VG2W562#E148
		17.1	46.2	24	23	20	0.20	90x110	VG2W562#F110
	6 800	16.8	45.4	20	20	20	0.20	77x165	VG2W682#E165
		18.7	50.5	20	20	20	0.20	90x126	VG2W682#F126
	8 200	18.5	50.0	18	18	20	0.20	77x188	VG2W822#E188
		20.4	55.1	18	18	20	0.20	90x150	VG2W822#F150
	10 000	20.3	54.8	15	15	20	0.20	77x188	VG2W103#E188
		22.5	60.8	15	15	20	0.20	90x150	VG2W103#F150
		22.2	59.9	15	15	20	0.20	90x167	VG2W103#F167
	12 000	24.5	66.2	13	12	20	0.20	90x190	VG2W123#F190
	14 000	26.3	71.0	11	11	20	0.20	90x190	VG2W143#F190
	15 000	27.3	73.7	10	10	20	0.20	90x190	VG2W153#F190
		26.6	71.8	10	10	20	0.20	90x230	VG2W153#F230
	18 000	28.8	77.8	8	8	20	0.20	90x268	VG2W183#F268

Additional designs on request · Weitere Designs auf Anfrage

Rated VoltageCode (Surge Voltage) V_r [V DC]	Capacitance C_r [µF]	Ripple Current at 105°C/120Hz I_r [A RMS]	Ripple Current at 40°C/120Hz [A RMS]	ESR (typ) at 20°C/100Hz [mΩ]	Zmax at 20°C/10kHz [mΩ]	ESL (typ) [nH]	Dissipation Factor at 20°C/120Hz Tan δ	DxL [mm]	Product Code # = variable value, see fixing code in the product code
500 VDC Code: 2H Surge Voltage 550 VDC	**560**	3.0	8.1	199	215	17	0.20	51x75	VG2H561#C075
	680	3.3	8.9	164	177	17	0.20	51x75	VG2H681#C075
	820	3.9	10.5	136	147	17	0.20	51x96	VG2H821#C096
	1 000	4.4	11.9	111	120	17	0.20	51x109	VG2H102#C109
	1 200	5.0	13.5	93	100	17	0.20	51x125	VG2H122#C125
	1 500	6.5	17.6	74	80	18	0.20	64x107	VG2H152#D107
	1 800	7.1	19.2	62	50	18	0.20	64x107	VG2H182#D107
		8.0	21.6	62	50	20	0.20	77x95	VG2H182#E095
	2 200	7.9	21.3	53	50	18	0.20	64x123	VG2H222#D123
		8.9	24.0	53	50	20	0.20	77x95	VG2H222#E095
	2 700	8.6	23.2	40	35	18	0.20	64x147	VG2H272#D147
		9.8	26.5	40	35	20	0.20	77x108	VG2H272#E108
		11.4	30.8	40	35	20	0.20	90x97	VG2H272#F097
	3 300	9.8	26.5	38	32	18	0.20	64x164	VG2H332#D164
		11.1	30.0	38	32	20	0.20	77x124	VG2H332#E124
		12.6	34.0	38	32	20	0.20	90x97	VG2H332#F097
	3 900	10.7	28.9	30	27	18	0.20	64x187	VG2H392#D187
		12.1	32.7	30	27	20	0.20	77x124	VG2H392#E124
		13.6	36.7	30	27	20	0.20	90x110	VG2H392#F110
	4 700	13.0	35.1	25	20	20	0.20	77x148	VG2H472#E148
		14.8	40.0	25	20	20	0.20	90x126	VG2H472#F126
	5 600	14.5	39.2	20	17	20	0.20	77x165	VG2H562#E165
		16.1	43.5	20	17	20	0.20	90x150	VG2H562#F150
	6 800	16.1	43.5	17	17	20	0.20	77x188	VG2H682#E188
		17.4	47.0	17	17	20	0.20	90x167	VG2H682#F167
	8 200	19.3	52.1	14	14	20	0.20	90x190	VG2H822#F190
	10 000	20.7	55.9	12	12	20	0.20	90x230	VG2H103#F230
	15 000	24.0	64.8	8	8	20	0.20	90x268	VG2H153#F268

* Please contact us if load condition exceeds terminals related $I_{r\,max}$ referred on page 13

Additional designs on request · Weitere Designs auf Anfrage

› Ripple Current Multiplier · Wechselstrommultiplikator

Frequency [Hz]	50/60	120	300	1k	≥ 10k
Multiplier	0.80	1.00	1.18	1.34	1.45

Ta (°C)	40	50	60	65	70	75	80	85	90	95	100	105
Multiplier 25-250 VDC	4.9	4.2	3.6	3.2	3.0	2.4	2.1	1.8	1.6	1.4	1.2	1.0
Multiplier 350-500 VDC	2.7	2.5	2.3	2.2	2.2	2.1	2.0	2.0	1.7	1.4	1.2	1.0

Forced cooling – Wind speed [m/sec]	v < 0.25	v ≥ 0.25	v ≥ 0.5	v ≥ 1.0	v ≥ 2.0	v ≥ 3.0
Multiplier	1.00	1.07	1.15	1.25	1.30	1.35

› Life Time Table · Brauchbarkeitsdauer – Tabelle

VG 25-250 VDC	Useful life as function of ambient temperature and ripple current											
I_r at 105°C	x 1.0	x 1.4	x 1.8	x 2.1	x 2.4	x 2.8	x 3.2	x 3.6	x 3.9	x 4.2	x 4.5	x 4.9
T_a = 40°C	250	250	250	250	250	250	250	250	250	250	207	127
T_a = 45°C	250	250	250	250	250	250	250	250	250	183	130	
T_a = 50°C	250	250	250	250	250	250	250	211	158	115		
T_a = 55°C	250	250	250	250	250	250	189	133	100			
T_a = 60°C	250	250	250	250	212	162	119	84				
T_a = 65°C	247	218	185	159	134	102	75					
T_a = 70°C	156	138	117	101	85	65						
T_a = 75°C	99	87	74	63	53							
T_a = 80°C	62	55	46	40								
T_a = 85°C	39	35	29									
T_a = 90°C	25	22										
T_a = 95°C	15	14										
T_a = 100°C	10											
T_a = 105°C	6		khrs	Max. value limited to 250 000 hours.								

VG 350-500 VDC	Useful life as function of ambient temperature and ripple current											
I_r at 105°C	x 1.0	x 1.2	x 1.4	x 1.7	x 2.0	x 2.1	x 2.2	x 2.3	x 2.4	x 2.5	x 2.6	x 2.7
T_a = 40°C	250	250	250	250	250	250	250	250	250	250	225	181
T_a = 45°C	250	250	250	250	250	250	250	250	215	176	142	
T_a = 50°C	250	250	250	250	250	237	199	165	136	111		
T_a = 55°C	250	250	250	250	178	150	125	104	86			
T_a = 60°C	250	250	250	177	112	95	79	66				
T_a = 65°C	245	204	165	112	71	60	50					
T_a = 70°C	155	129	104	71	45	38	31					
T_a = 75°C	98	81	66	45	28	24						
T_a = 80°C	62	51	41	28	18							
T_a = 85°C	39	32	26	18	11							
T_a = 90°C	24	20	16	11								
T_a = 95°C	15	13	10									
T_a = 100°C	9	8										
T_a = 105°C	6		khrs	Max. value limited to 250 000 hours.								

› Life Time Graph · Brauchbarkeitsdauer – Diagramm

Useful life depending on ambient temperature T_a and ripple current operating conditions I_r versus rated ripple current at the upper category temperature $I_{r,\ 105°C,120Hz}$

Brauchbarkeitsdauer in Abhängigkeit von Umgebungstemperatur T_a und Wechselstrombelastung I_r im Verhältnis zur max. Wechselstrombelastung bei oberer Kategorietemperatur $I_{r,\ 105°C,120Hz}$

VG 25 – 250 VDC

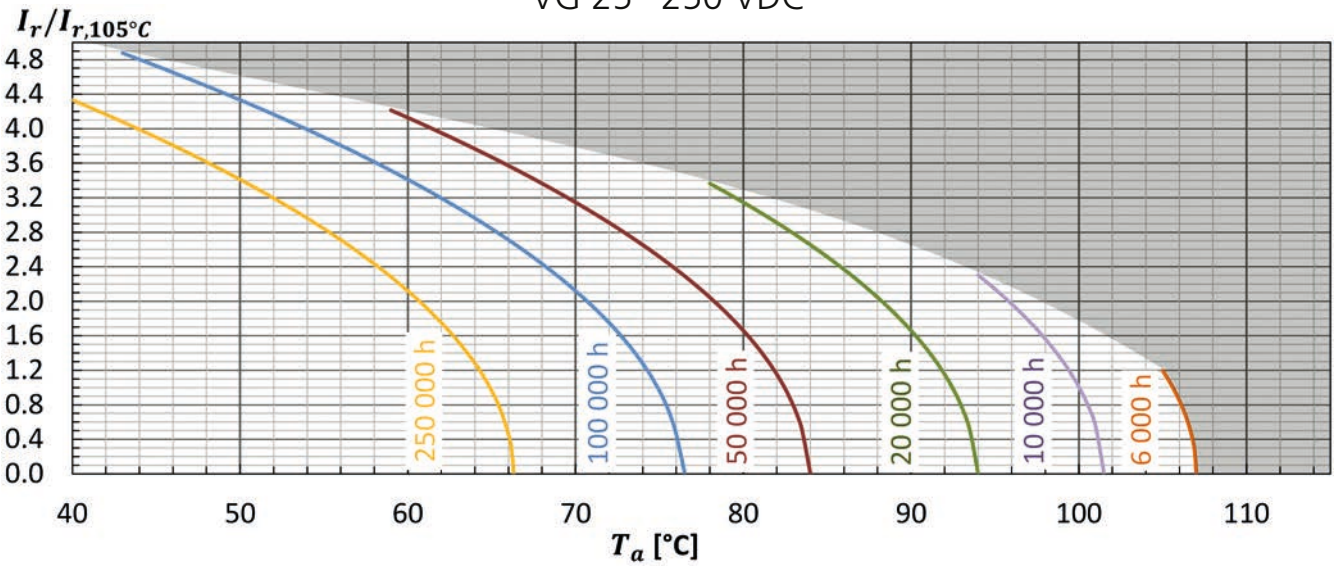

VG 350 – 500 VDC

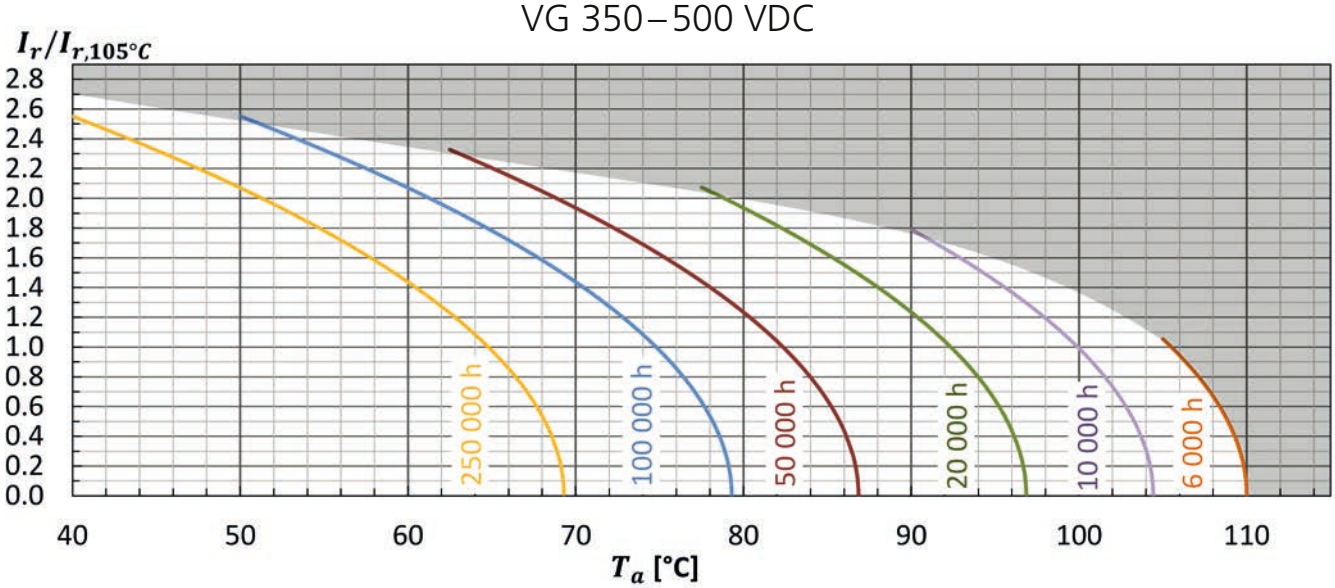

› Life Time Tests and Requirements · Anforderungen Brauchbarkeitsdauer

Life time test	Test procedure	End of Life criteria
Endurance test	T_a = 105°C; V_r, I_r applied 4000 hours	ΔC/C ≤ 10% (of initial value) Tanδ ≤ 175% (of specified value) I_L ≤ specified value
Useful life	T_a = 105°C; V_r, I_r applied 6000 hours	ΔC/C ≤ 15% (of initial value) Tanδ < 200% (of specified value) I_L ≤ specified value

Reference Specification: JIS C 5101-4, JIS C 5102, IEC 60384-4

VGL · Screw-Terminal · 12000 h/105°C

Long Life · Bottom cooling design

Optional design for permanent and deep charge-discharge application with high voltage hub and pulsed operation mode upon request.

Spezielles Design für häufige und tiefe Lade-, Entladeanwendungen mit hohem Spannungshub und Impulsbetrieb auf Anfrage erhältlich.

› Specifications · Spezifikationen

Items	Characteristics
Temperature range	-40°C ~ + 105°C
Capacitance tolerance (at 20°C)	Standard +/- 20%, -10/+30% on request
Surge voltage / Ripple voltage	Repetitive max. 30 sec per 6 Minutes / ≤ 50V
Leakage current max. I_L (20°C, 5 min)	0.01 • C • V_r [µA] or 5 mA, which is smaller.
Useful life	12 000 hours at 105°C
Field failure rate	0.5 FIT = 0.5 • 10^{-9} Failures/hour
Reference standards	IEC 60384-4, JIS C 5101-4
Vibration	0.75mm, 10…55Hz, 10g, 3x2h
Outer materials	UL94-V0 / UL224-VW1 certified (cap / sleeve)
Sleeve withstanding voltage	4000 Vac / 1min between terminals bundled and plate*
Product Compliance	RoHS, REACH, Conflict Minerals a.o. – refer to p. 14–15

* Typical value

› Shape designation · Formbezeichnung

- additional information on p. 12–13 · Zusatzinformationen auf S. 12–13
- mounting accessories from p. 219 · Montagezubehör ab S. 219

Diameter 64 mm to 90 mm

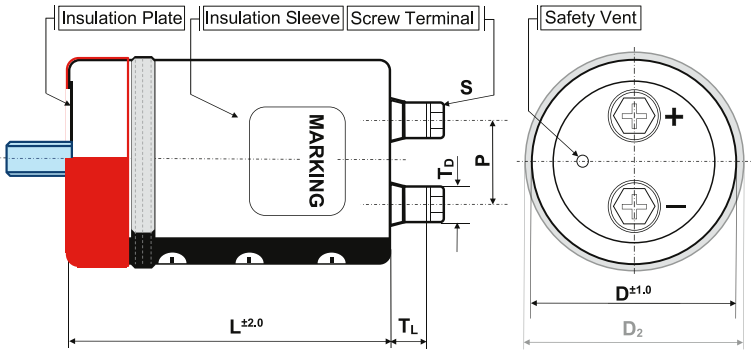

Diameter 51 mm

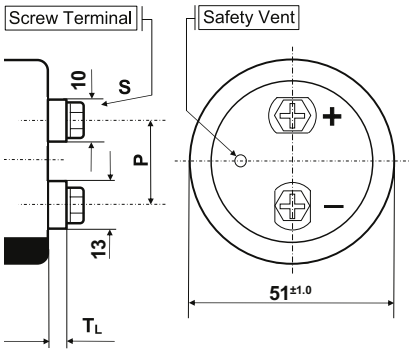

Shape code Features	B Bolt	I/Y double sleeve for 2/3 points metal Bracket	N + suffix WC blank bottom + seating ring	N standard
outer insulation sleeve	•	•	•	•
insulation plate	•	•		•
stud bolt	•			
bottom double sleeve		•		
integrated seating ring			•	

diameter code	ØD	available shape	P	S	T_L	T_D	Cap material
C	51	B, N, I, Y	22.0	M5x10	4.5	13/10	PH
D	64	B, N, I, Y	28.6	M5x10	8.0	11	PH
E	77	B, N, I, Y, WC	31.5	M5x10	8.0	11	PH
				M6x12	9.0	12	PH
F	90	B, N, I, Y, WC	31.5	M5x10	7.0	11	PH
				M6x12	8.0	12	PH

Size in mm. First listed terminal is standard.

AIC EUROPE GmbH · Sales & technical support of AIC capacitors · Telefon: +49 (0)2151-4943-5 · E-Mail: info@aic-europe.com · www.aic-europe.com

› Product Code · Bestellbezeichnung

Example: Series VGL · 15000 µF +/- 20 % · 400 V · D = 90 mm · L = 190 mm with Y-Bracket

VGL **2G** **153** **Y** **F** **190**

- **VGL** – Series name
- **2G** – Rated voltage code
- **153** – Capacitance code
- **Y** – Shape code
- **F** – Diameter code
- **190** – Case length code – length in mm (3 digits)
- Capacitance tolerance: Ø : ± 20 % / Q : -10 % ~ + 30 %
- Specific features (e.g. M6 …)

Rated voltage code			
Code	Voltage	Code	Voltage
2V	350	2W	450
2G	400	2H	500

Rated VoltageCode (Surge Voltage) V_r [V DC]	Capacitance C_r [µF]	Ripple Current at 105°C/120Hz I_r [A RMS]	Ripple Current at 40°C/120Hz [A RMS]	ESR (typ) at 20°C/100Hz [mΩ]	Zmax at 20°C/10kHz [mΩ]	ESL (typ) [nH]	Dissipation Factor at 20°C/120Hz Tan δ	DxL [mm]	Product Code # = variable value, see fixing code in the product code
350 VDC Code: 2V Surge Voltage 400 VDC	**1 800**	5.6	15.2	59	70	17	0.20	51x75	VGL2V182#C075
	2 200	6.5	17.6	48	57	17	0.20	51x96	VGL2V222#C096
	2 700	7.5	20.3	39	47	17	0.20	51x109	VGL2V272#C109
	3 300	8.6	23.3	32	38	17	0.20	51x125	VGL2V332#C125
	3 900	10.5	28.4	27	32	18	0.20	64x94	VGL2V392#D094
	4 700	11.9	32.1	22	23	18	0.20	64x107	VGL2V472#D107
	5 600	13.0	35.1	20	21	18	0.20	64x123	VGL2V562#D123
		14.6	39.4	20	21	20	0.20	77x95	VGL2V562#E095
	6 800	14.1	38.1	18	18	18	0.20	64x147	VGL2V682#D147
		16.0	43.2	18	18	20	0.20	77x108	VGL2V682#E108
		18.5	50.0	18	18	20	0.20	90x97	VGL2V682#F097
	8 200	15.9	42.9	15	17	18	0.20	64x187	VGL2V822#D187
		18.0	48.6	15	17	20	0.20	77x124	VGL2V822#E124
		20.2	54.5	15	17	20	0.20	90x110	VGL2V822#F110
	10 000	19.5	52.7	12	15	20	0.20	77x148	VGL2V103#E148
		22.1	59.7	12	15	20	0.20	90x126	VGL2V103#F126
	12 000	21.8	58.9	10	13	20	0.20	77x188	VGL2V123#E188
		24.1	65.1	10	13	20	0.20	90x150	VGL2V123#F150
	15 000	25.2	68.0	8	11	20	0.20	77x228	VGL2V153#E228
		26.9	72.6	8	11	20	0.20	90x150	VGL2V153#F150
	18 000	29.3	79.1	6	9	20	0.20	90x190	VGL2V183#F190
	22 000	31.5	85.1	5	7	20	0.20	90x230	VGL2V223#F230
	27 000	34.4	92.9	4	6	20	0.20	90x268	VGL2V273#F268
400 VDC Code: 2G Surge Voltage 450 VDC	**1 200**	4.7	12.7	83	97	17	0.20	51x75	VGL2G122#C075
	1 500	5.6	15.2	66	77	17	0.20	51x96	VGL2G152#C096
	1 800	6.2	16.8	55	65	17	0.20	51x109	VGL2G182#C109
	2 200	7.0	18.9	45	53	17	0.20	51x125	VGL2G222#C125
	3 300	9.7	26.2	30	35	18	0.20	64x94	VGL2G332#D094
	3 900	10.8	29.2	27	32	18	0.20	64x107	VGL2G392#D107
	4 700	11.9	32.1	22	23	18	0.20	64x123	VGL2G472#D123
		13.3	35.9	22	23	20	0.20	77x95	VGL2G472#E095

Additional designs on request · Weitere Designs auf Anfrage

Rated VoltageCode (Surge Voltage) V_r [V DC]	Capacitance C_r [µF]	Ripple Current at 105°C/120Hz I_r [A RMS]	Ripple Current at 40°C/120Hz [A RMS]	ESR (typ) at 20°C/100Hz [mΩ]	Zmax at 20°C/10kHz [mΩ]	ESL (typ) [nH]	Dissipation Factor at 20°C/120Hz Tan δ	DxL [mm]	Product Code # = variable value, see fixing code in the product code
400 VDC Code: 2G Surge Voltage 450 VDC	**5 600**	12.8	34.6	20	21	18	0.20	64x147	VGL2G562#D147
		14.5	39.2	20	21	20	0.20	77x108	VGL2G562#E108
		16.8	45.4	20	21	20	0.20	90x97	VGL2G562#F097
	6 800	14.5	39.2	18	18	18	0.20	64x187	VGL2G682#D187
		16.4	44.3	18	18	20	0.20	77x124	VGL2G682#E124
		18.4	49.7	18	18	20	0.20	90x110	VGL2G682#F110
	8 200	18.0	48.6	15	17	20	0.20	77x165	VGL2G822#E165
		20.0	54.0	15	17	20	0.20	90x126	VGL2G822#F126
	10 000	19.9	53.7	12	15	20	0.20	77x188	VGL2G103#E188
		22.0	59.4	12	15	20	0.20	90x150	VGL2G103#F150
	12 000	23.7	64.0	10	13	20	0.20	90x167	VGL2G123#F167
	15 000	26.7	72.1	8	11	20	0.20	90x190	VGL2G153#F190
	18 000	28.5	77.0	7	9	20	0.20	90x230	VGL2G183#F230
	22 000	31.1	84.0	6	7	20	0.20	90x268	VGL2G223#F268
450 VDC Code: 2W Surge Voltage 500 VDC	**1 000**	4.2	11.4	93	93	17	0.20	51x75	VGL2W102#C075
	1 200	5.0	13.5	77	77	17	0.20	51x96	VGL2W122#C096
	1 500	5.9	16.0	62	62	17	0.20	51x109	VGL2W152#C109
	1 800	6.6	17.9	52	52	17	0.20	51x125	VGL2W182#C125
	2 200	8.1	21.9	42	42	18	0.20	64x94	VGL2W222#D094
	2 700	9.2	24.8	42	42	18	0.20	64x107	VGL2W272#D107
	3 300	10.2	27.5	35	40	18	0.20	64x123	VGL2W332#D123
		11.4	30.8	35	40	20	0.20	77x95	VGL2W332#E095
	3 900	10.9	29.4	27	32	18	0.20	64x147	VGL2W392#D147
		12.4	33.5	27	32	20	0.20	77x108	VGL2W392#E108
	4 700	12.2	32.9	24	27	18	0.20	64x164	VGL2W472#D164
		13.9	37.5	24	27	20	0.20	77x124	VGL2W472#E124
		15.8	42.7	24	27	20	0.20	90x97	VGL2W472#F097
	5 600	13.5	36.5	24	23	18	0.20	64x187	VGL2W562#D187
		14.9	40.2	22	23	20	0.20	77x148	VGL2W562#E148
		17.1	46.2	22	23	20	0.20	90x110	VGL2W562#F110
	6 800	16.8	45.4	20	20	20	0.20	77x165	VGL2W682#E165
		18.7	50.5	20	20	20	0.20	90x126	VGL2W682#F126
	8 200	18.5	50.0	18	18	20	0.20	77x188	VGL2W822#E188
		20.4	55.1	18	18	20	0.20	90x150	VGL2W822#F150
	10 000	20.4	55.1	15	15	20	0.20	77x188	VGL2W103#E188
		22.2	59.9	15	15	20	0.20	90x167	VGL2W103#F167
	12 000	24.5	66.2	13	12	20	0.20	90x190	VGL2W123#F190
	15 000	26.6	71.8	11	10	20	0.20	90x230	VGL2W153#F230
	18 000	28.8	77.8	9	8	20	0.20	90x268	VGL2W183#F268
500 VDC Code: 2H Surge Voltage 550 VDC	**560**	3.0	8.1	199	215	17	0.20	51x75	VGL2H561#C075
	680	3.3	8.9	164	177	17	0.20	51x75	VGL2H681#C075
	820	3.9	10.5	136	147	17	0.20	51x96	VGL2H821#C096
	1 000	4.4	11.9	111	120	17	0.20	51x109	VGL2H102#C109
	1 200	5.0	13.5	93	100	17	0.20	51x125	VGL2H122#C125

Additional designs on request · Weitere Designs auf Anfrage

Rated VoltageCode (Surge Voltage) V_r [V DC]	Capacitance C_r [µF]	Ripple Current at 105°C/120Hz I_r [A RMS]	Ripple Current at 40°C/120Hz [A RMS]	ESR (typ) at 20°C/100Hz [mΩ]	Zmax at 20°C/10kHz [mΩ]	ESL (typ) [nH]	Dissipation Factor at 20°C/120Hz Tan δ	DxL [mm]	Product Code # = variable value, see fixing code in the product code
500 VDC Code: 2H Surge Voltage 550 VDC	**1 500**	6.5	17.6	74	80	18	0.20	64x107	VGL2H152#D107
	1 800	7.1	19.2	62	50	18	0.20	64x107	VGL2H182#D107
		8.0	21.6	62	50	20	0.20	77x95	VGL2H182#E095
	2 200	7.9	21.3	53	50	18	0.20	64x123	VGL2H222#D123
		8.9	24.0	53	50	20	0.20	77x95	VGL2H222#E095
	2 700	8.6	23.2	40	35	18	0.20	64x147	VGL2H272#D147
		9.8	26.5	40	35	20	0.20	77x108	VGL2H272#E108
		11.4	30.8	40	35	20	0.20	90x97	VGL2H272#F097
	3 300	9.8	26.5	38	32	18	0.20	64x164	VGL2H332#D164
		11.1	30.0	38	32	20	0.20	77x124	VGL2H332#E124
		12.6	34.0	38	32	20	0.20	90x97	VGL2H332#F097
	3 900	10.7	28.9	30	27	18	0.20	64x187	VGL2H392#D187
		12.1	32.7	30	27	20	0.20	77x124	VGL2H392#E124
		13.6	36.7	30	27	20	0.20	90x110	VGL2H392#F110
	4 700	13.0	35.1	25	20	20	0.20	77x148	VGL2H472#E148
		14.8	40.0	25	20	20	0.20	90x126	VGL2H472#F126
	5 600	14.5	39.2	20	17	20	0.20	77x165	VGL2H562#E165
		16.1	43.5	20	17	20	0.20	90x150	VGL2H562#F150
	6 800	16.1	43.5	17	17	20	0.20	77x188	VGL2H682#E188
		17.4	47.0	17	17	20	0.20	90x167	VGL2H682#F167
	8 200	19.3	52.1	14	14	20	0.20	90x190	VGL2H822#F190
	10 000	20.7	55.9	12	12	20	0.20	90x230	VGL2H103#F230
	12 000	21.5	58.1	10	10	20	0.20	90x268	VGL2H123#F268

Additional designs on request · Weitere Designs auf Anfrage

› Ripple Current Multiplier · Wechselstrommultiplikator

Frequency [Hz]	50/60	120	300	1k	≥ 10k
Multiplier	0.80	1.00	1.18	1.34	1.45

Ta (°C)	40	50	60	65	70	75	80	85	90	95	100	105
Multiplier	2.7	2.5	2.3	2.2	2.2	2.1	2.0	2.0	1.7	1.4	1.2	1.0

Forced cooling – Wind speed [m/sec]	v < 0.25	v ≥ 0.25	v ≥ 0.5	v ≥ 1.0	v ≥ 2.0	v ≥ 3.0
Multiplier	1.00	1.07	1.15	1.25	1.30	1.35

› Life Time Table · Brauchbarkeitsdauer – Tabelle

VGL	Useful life as function of ambient temperature and ripple current											
I_r at 105°C	x 1.0	x 1.2	x 1.4	x 1.7	x 2.0	x 2.1	x 2.2	x 2.3	x 2.4	x 2.5	x 2.6	x 2.7
T_a = 40°C	250	250	250	250	250	250	250	250	250	250	250	250
T_a = 45°C	250	250	250	250	250	250	250	250	250	250	250	
T_a = 50°C	250	250	250	250	250	250	250	250	250	222		
T_a = 55°C	250	250	250	250	250	250	250	209	172			
T_a = 60°C	250	250	250	250	225	190	159	132				
T_a = 65°C	250	250	250	225	142	120	100					
T_a = 70°C	250	250	208	142	90	76	63					
T_a = 75°C	196	163	132	90	56	48						
T_a = 80°C	124	103	83	56	36							
T_a = 85°C	78	65	52	36	22							
T_a = 90°C	49	41	33	22								
T_a = 95°C	31	26	21									
T_a = 100°C	19	16										
T_a = 105°C	12		khrs	Max. value limited to 250 000 hours.								

› Life Time Graph · Brauchbarkeitsdauer – Diagramm

Useful life depending on ambient temperature T_a and ripple current operating conditions I_r versus rated ripple current at the upper category temperature $I_{r,\,105°C,120Hz}$

Brauchbarkeitsdauer in Abhängigkeit von Umgebungstemperatur T_a und Wechselstrombelastung I_r im Verhältnis zur max. Wechselstrombelastung bei oberer Kategorietemperatur $I_{r,\,105°C,120Hz}$

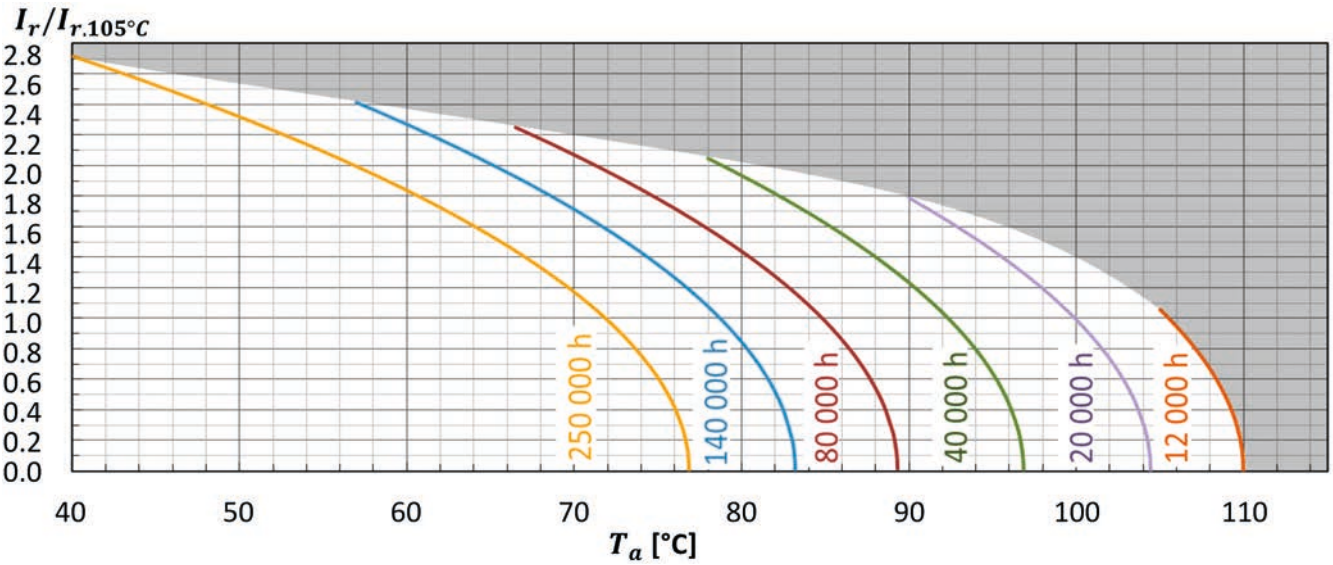

› Life Time Tests and Requirements · Anforderungen Brauchbarkeitsdauer

Life time test	Test procedure	End of Life criteria
Endurance test	T_a = 105°C; V_r, I_r applied 8000 hours	ΔC/C ≤ 10% (of initial value) Tanδ ≤ 175% (of specified value) I_L ≤ specified value
Useful life	T_a = 105°C; V_r, I_r applied 12000 hours	ΔC/C ≤ 15% (of initial value) Tanδ < 200% (of specified value) I_L ≤ specified value

Reference Specification: JIS C 5101-4, JIS C 5102, IEC 60384-4

HCGH · Screw-Terminal · 6000 h/105 °C

Standard Performances · Small Diameters

Optional design for permanent and deep charge-discharge application with high voltage hub and pulsed operation mode upon request.

Spezielles Design für häufige und tiefe Lade-, Entladeanwendungen mit hohem Spannungshub und Impulsbetrieb auf Anfrage erhältlich.

› Specifications · Spezifikationen

Items	Characteristics
Temperature range	-40°C ~ + 105°C
Capacitance tolerance	Standard +/- 20%, -10/+30% on request
Surge voltage	Repetitive max. 30 sec per 6 Minutes / ≤ 50V
Leakage current max. I_L (20°C, 5 min)	0.01 • C • V_r [µA] or 3 mA, which is smaller.
Useful life	6000 hours at 105°C
Field failure rate	0.5 FIT = 0.5 • 10^{-9} Failures/hour
Reference standards	IEC 60384-4, JIS C 5101-4
Vibration	0.75mm, 10…55Hz, 10g, 3x2h
Outer materials	UL94-V0 / UL224-VW1 certified (cap / sleeve)
Sleeve withstanding voltage	4000 Vac / 1min between terminals bundled and plate*
Product Compliance	RoHS, REACH, Conflict Minerals a.o. – refer to p. 14–15

* Typical value

› Shape designation · Formbezeichnung

- additional information on p. 12–13 · Zusatzinformationen auf S. 12–13
- mounting accessories from p. 219 · Montagezubehör ab S. 219

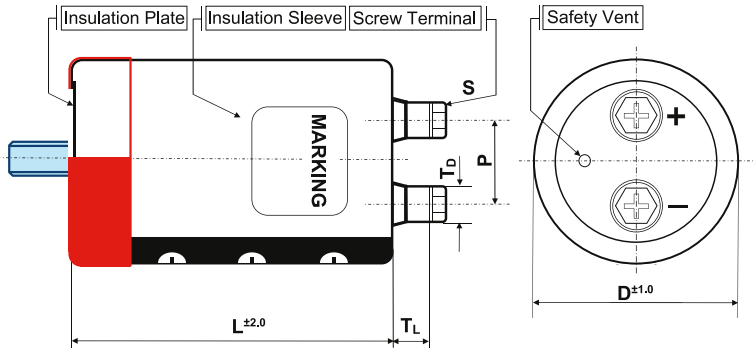

Shape code Features	B Bolt	I / Y double sleeve for 2/3 points metal Bracket	N standard
outer insulation sleeve	•	•	•
insulation plate	•	•	•
stud bolt	•		
bottom double sleeve		•	

diameter code	ØD	available shape	P	S	T_L	T_D	Cap material
A	36	N, I	12.7	M5x10	6.5	8	PH
C	51	B, N, I, Y	22.0	M5x10	5.5	10	PH
D	64	B, N, I, Y	28.6	M5x10	5.5	10	PH
E	77	B, N, I, Y	31.5	M5x10	5.0	10	PH
				M6x12	4.5	17.2	PH
F	90	B, N, I, Y	31.5	M5x10	5.0	10	PH
				M6x12	5.0	17.2	PH

Size in mm. First listed terminal is standard.

> Product Code · Bestellbezeichnung

Example: Series HCGH · 4700 µF · 250 V · D = 64 mm · L = 115 mm with Y-Bracket

HCGH **2E** **472** **Y** **D** **115** **(PH)**

- **HCGH**: Series name
- **2E**: Rated voltage code
- **472**: Capacitance code
- **Y**: Shape code
- **D**: Diameter code
- Capacitance tolerance: Ø : ± 20 % / Q : -10 % ~ + 30 %
- **115**: Case length code – length in mm (3 digits)
- **(PH)**: Specific features (e.g. M6 …)

Rated voltage code					
Code	Voltage	Code	Voltage	Code	Voltage
1E	25	1K	80	2E	250
1V	35	2A	100	2G	400
1H	50	2C	160	2W	450
1J	63	2D	200		

Rated VoltageCode (Surge Voltage) V_r [V DC]	Capacitance C_r [µF]	Ripple Current at 105°C/120Hz I_r [A RMS]	Ripple Current at 40°C/120Hz [A RMS]	ESR (typ) at 20°C/100Hz [mΩ]	Zmax at 20°C/10kHz [mΩ]	ESL (typ) [nH]	Dissipation Factor at 20°C/120Hz Tan δ	DxL [mm]	Product Code # = variable value, see fixing code in the product code
25 VDC Code: 1E Surge Voltage 32 VDC	**10 000**	3.3	15.8	32	30	15	0.35	36x53	HCGH1E103#A053PH
	15 000	4.8	23.0	27	27	15	0.35	36x83	HCGH1E153#A083PH
	22 000	5.9	28.3	22	23	15	0.35	36x83	HCGH1E223#A083PH
	33 000	7.2	34.6	15	16	15	0.40	36x100	HCGH1E333#A100PH
	47 000	9.2	44.2	10	11	17	0.40	51x75	HCGH1E473#C075PH
	68 000	11.5	55.2	7	8	17	0.50	51x115	HCGH1E683#C115PH
	100 000	13.0	62.4	6	7	18	0.60	64x96	HCGH1E104#D096PH
	150 000	14.8	71.0	6	7	18	0.80	64x115	HCGH1E154#D115PH
	220 000	17.0	81.6	4	5	20	1.00	77x115	HCGH1E224#E115PH
	330 000	22.9	109.9*	4	5	20	1.00	90x131	HCGH1E334#F131PH
35 VDC Code: 1V Surge Voltage 44 VDC	**6 800**	3.0	14.4	42	37	15	0.30	36x53	HCGH1V682#A053PH
	10 000	4.3	20.6	29	31	15	0.30	36x83	HCGH1V103#A083PH
	15 000	5.2	25.0	19	20	15	0.30	36x83	HCGH1V153#A083PH
	22 000	6.3	30.2	14	15	15	0.35	36x100	HCGH1V223#A100PH
	33 000	7.7	37.0	12	13	17	0.40	51x75	HCGH1V333#C075PH
	47 000	9.3	44.6	8	9	17	0.45	51x96	HCGH1V473#C096PH
	68 000	11.5	55.2	7	8	17	0.50	51x115	HCGH1V683#C115PH
	100 000	13.9	66.7	6	7	18	0.60	64x115	HCGH1V104#D115PH
	150 000	15.9	76.3	5	7	20	0.70	77x115	HCGH1V154#E115PH
	220 000	20.2	97.0	5	7	20	0.70	90x131	HCGH1V224#F131PH
50 VDC Code: 1H Surge Voltage 63 VDC	**3 300**	2.5	12.0	90	80	15	0.20	36x53	HCGH1H332#A053PH
	4 700	3.8	18.2	64	58	15	0.25	36x53	HCGH1H472#A053PH
	6 800	3.9	18.7	44	39	15	0.25	36x83	HCGH1H682#A083PH
	10 000	4.7	22.6	30	28	15	0.25	36x83	HCGH1H103#A083PH
	15 000	5.6	26.9	20	20	15	0.30	36x83	HCGH1H153#A083PH
		5.6	26.9	20	20	15	0.30	36x100	HCGH1H153#A100PH
	22 000	6.9	33.1	14	15	15	0.35	36x100	HCGH1H223#A100PH
		6.8	32.6	14	15	17	0.35	51x75	HCGH1H223#C075PH
	33 000	9.0	43.2	13	14	17	0.40	51x115	HCGH1H333#C115PH
	39 000	9.4	45.1	11	12	17	0.40	51x83	HCGH1H393#C083PH

Rated VoltageCode (Surge Voltage) V_r [V DC]	Capacitance C_r [µF]	Ripple Current at 105°C/120Hz I_r [A RMS]	Ripple Current at 40°C/120Hz [A RMS]	ESR (typ) at 20°C/100Hz [mΩ]	Zmax at 20°C/10kHz [mΩ]	ESL (typ) [nH]	Dissipation Factor at 20°C/120Hz Tan δ	DxL [mm]	Product Code # = variable value, see fixing code in the product code
50 VDC Code: 1H Surge Voltage 63 VDC	**47 000**	10.9	52.3	11	12	18	0.40	64x96	HCGH1H473#D096PH
	68 000	13.3	63.8	8	9	18	0.45	64x115	HCGH1H683#D115PH
	100 000	16.2	77.8	6	7	20	0.50	77x115	HCGH1H104#E115PH
	140 000	22.4	107.5*	5	8	20	0.50	77x137	HCGH1H144#E137PH
	150 000	21.7	104.2*	5	7	20	0.50	90x131	HCGH1H154#F131PH
63 VDC Code: 1J Surge Voltage 79 VDC	**2 200**	2.4	11.5	95	87	15	0.15	36x53	HCGH1J222#A053PH
	3 300	2.5	12.0	63	58	15	0.20	36x53	HCGH1J332#A053PH
	4 700	3.6	17.3	54	50	15	0.20	36x83	HCGH1J472#A083PH
	6 800	4.3	20.6	38	35	15	0.20	36x83	HCGH1J682#A083PH
	10 000	5.1	24.5	28	28	15	0.25	36x100	HCGH1J103#A100PH
		5.3	25.4	28	28	17	0.25	51x75	HCGH1J103#C075PH
	15 000	6.6	31.7	21	22	17	0.25	51x75	HCGH1J153#C075PH
	22 000	7.8	37.4	13	14	17	0.30	51x96	HCGH1J223#C096PH
	33 000	10.6	50.9	10	11	18	0.30	64x96	HCGH1J333#D096PH
	47 000	11.3	54.1	8	9	20	0.35	90x77	HCGH1J473#F077PH
		12.5	60.0	8	9	18	0.35	64x115	HCGH1J473#D115PH
	68 000	15.0	72.0	7	8	20	0.40	77x115	HCGH1J683#E115PH
	100 000	19.8	95.0	7	8	20	0.40	90x131	HCGH1J104#F131PH
80 VDC Code: 1K Surge Voltage 100 VDC	**2 200**	2.4	11.5	68	63	15	0.15	36x53	HCGH1K222#A053PH
	3 300	3.5	16.8	45	42	15	0.15	36x83	HCGH1K332#A083PH
	4 700	4.1	19.7	32	30	15	0.15	36x83	HCGH1K472#A083PH
	6 800	4.6	22.1	22	23	15	0.20	36x100	HCGH1K682#A100PH
	10 000	6.0	28.8	15	16	17	0.20	51x75	HCGH1K103#C075PH
	15 000	7.1	34.1	10	11	17	0.25	51x96	HCGH1K153#C096PH
	22 000	9.4	45.1	9	10	18	0.25	64x96	HCGH1K223#D096PH
	33 000	11.2	53.8	7	7	20	0.30	77x96	HCGH1K333#E096PH
	47 000	14.4	69.1	6	7	20	0.30	77x115	HCGH1K473#E115PH
	68 000	18.9	90.7	4	7	20	0.30	90x131	HCGH1K683#F131PH
100 VDC Code: 2A Surge Voltage 125 VDC	**1 000**	1.6	7.7	112	100	15	0.15	36x53	HCGH2A102#A053PH
	1 500	2.0	9.6	75	87	15	0.15	36x53	HCGH2A152#A053PH
	2 200	2.9	13.9	51	47	15	0.15	36x83	HCGH2A222#A083PH
	3 300	3.5	16.8	34	32	15	0.15	36x83	HCGH2A332#A083PH
	4 700	4.5	21.6	24	24	15	0.15	36x100	HCGH2A472#A100PH
	6 800	5.8	27.8	19	20	17	0.15	51x75	HCGH2A682#C075PH
	10 000	7.5	36.0	13	14	17	0.15	51x96	HCGH2A103#C096PH
	15 000	8.7	41.8	11	12	18	0.20	64x96	HCGH2A153#D096PH
	22 000	11.2	53.8	8	9	20	0.20	77x96	HCGH2A223#E096PH
	33 000	13.6	65.3	6	7	20	0.25	77x130	HCGH2A333#E130PH
	47 000	17.3	83.0	5	7	20	0.25	90x131	HCGH2A473#F131PH
160 VDC Code: 2C Surge Voltage 200 VDC	**470**	1.2	5.8	277	261	15	0.15	36x53	HCGH2C471#A053PH
	680	1.3	6.2	191	180	15	0.15	36x53	HCGH2C681#A053PH
	1 000	2.0	9.6	130	120	15	0.15	36x83	HCGH2C102#A083PH
	1 500	2.3	11.0	87	80	15	0.15	36x83	HCGH2C152#A083PH
	2 200	3.1	14.9	59	53	15	0.15	36x100	HCGH2C222#A100PH
	3 300	4.0	19.2	40	35	17	0.15	51x75	HCGH2C332#C075PH

Additional designs on request · Weitere Designs auf Anfrage

Rated VoltageCode (Surge Voltage) V_r [V DC]	Capacitance C_r [µF]	Ripple Current at 105°C/120Hz I_r [A RMS]	Ripple Current at 40°C/120Hz [A RMS]	ESR (typ) at 20°C/100Hz [mΩ]	Zmax at 20°C/10kHz [mΩ]	ESL (typ) [nH]	Dissipation Factor at 20°C/120Hz Tan δ	DxL [mm]	Product Code # = variable value, see fixing code in the product code
160 VDC Code: 2C Surge Voltage 200 VDC	**4 700**	4.7	22.6	30	30	17	0.15	51x75	HCGH2C472#C075PH
		5.1	24.5	30	25	17	0.15	51x96	HCGH2C472#C096PH
	6 800	6.8	32.6	22	23	18	0.15	64x96	HCGH2C682#D096PH
	10 000	8.7	41.8	15	16	20	0.15	77x96	HCGH2C103#E096PH
	15 000	11.8	56.6	13	13	20	0.15	77x130	HCGH2C153#E130PH
	22 000	15.2	73.0	10	10	20	0.15	90x131	HCGH2C223#F131PH
200 VDC Code: 2D Surge Voltage 250 VDC	**330**	0.9	4.3	395	372	15	0.15	36x53	HCGH2D331#A053PH
	470	1.2	5.8	277	261	15	0.15	36x53	HCGH2D471#A053PH
	680	1.3	6.2	191	180	15	0.15	36x53	HCGH2D681#A053PH
	1 000	2.0	9.6	120	100	15	0.15	36x83	HCGH2D102#A083PH
	1 500	2.5	12.0	100	85	15	0.15	36x100	HCGH2D152#A100PH
	2 200	3.2	15.4	68	60	17	0.15	51x75	HCGH2D222#C075PH
	3 300	4.3	20.6	45	35	17	0.15	51x96	HCGH2D332#C096PH
	4 700	5.6	26.9	31	27	18	0.15	64x96	HCGH2D472#D096PH
	6 800	7.2	34.6	21	20	18	0.15	64x115	HCGH2D682#D115PH
		8.4	40.3	21	20	20	0.15	77x145	HCGH2D682#E145PH
	10 000	9.3	44.6	14	14	20	0.15	77x115	HCGH2D103#E115PH
		10.2	49.0	14	14	20	0.15	77x145	HCGH2D103#E145PH
	15 000	12.5	60.0	10	10	20	0.15	90x131	HCGH2D153#F131PH
	22 000	17.7	85.0	7	7	20	0.15	77x215	HCGH2D223#E215PH
250 VDC Code: 2E Surge Voltage 300 VDC	**330**	0.9	4.3	285	268	15	0.15	36x53	HCGH2E331#A053PH
	470	1.2	5.8	200	187	15	0.15	36x53	HCGH2E471#A053PH
	680	1.6	7.7	138	131	15	0.15	36x83	HCGH2E681#A083PH
	1 000	2.2	10.6	84	70	15	0.15	36x100	HCGH2E102#A100PH
	1 500	2.6	12.5	56	50	17	0.15	51x75	HCGH2E152#C075PH
	2 200	3.6	17.3	50	45	17	0.15	51x96	HCGH2E222#C096PH
	3 300	4.8	23.0	36	35	18	0.15	64x96	HCGH2E332#D096PH
	4 700	6.2	29.8	25	23	18	0.15	64x115	HCGH2E472#D115PH
	6 800	7.9	37.9	18	18	20	0.15	77x115	HCGH2E682#E115PH
	10 000	10.7	51.4	13	13	20	0.15	77x155	HCGH2E103#E155PH
	15 000	14.0	67.2	9	9	20	0.15	90x157	HCGH2E153#F157PH
400 VDC Code: 2G Surge Voltage 450 VDC	**1 000**	2.9	11.0	102	105	17	0.15	51x75	HCGH2G102#C075PH
	1 200	3.5	13.3	85	88	17	0.15	51x96	HCGH2G122#C096PH
	1 500	4.1	15.6	68	70	17	0.15	51x115	HCGH2G152#C115PH
	1 800	4.7	17.9	57	58	17	0.15	51x130	HCGH2G182#C130PH
	2 200	4.8	18.2	46	48	17	0.15	51x105	HCGH2G222#C105PH
		5.2	19.8	46	48	18	0.15	64x96	HCGH2G222#D096PH
	2 700	6.1	23.2	38	40	18	0.15	64x115	HCGH2G272#D115PH
	3 300	7.1	27.0	30	32	18	0.15	64x130	HCGH2G332#D130PH
		6.9	26.2	30	32	20	0.15	77x105	HCGH2G332#E105PH
	3 900	8.3	31.5	26	28	18	0.15	64x155	HCGH2G392#D155PH
		7.8	29.6	26	28	20	0.15	77x115	HCGH2G392#E115PH
	4 700	10.0	38.0	21	22	18	0.15	64x195	HCGH2G472#D195PH
		9.0	34.2	21	22	20	0.15	77x130	HCGH2G472#E130PH

Additional designs on request · Weitere Designs auf Anfrage

Rated VoltageCode (Surge Voltage) V_r [V DC]	Capacitance C_r [µF]	Ripple Current at 105°C/120Hz I_r [A RMS]	Ripple Current at 40°C/120Hz [A RMS]	ESR (typ) at 20°C/100Hz [mΩ]	Zmax at 20°C/10kHz [mΩ]	ESL (typ) [nH]	Dissipation Factor at 20°C/120Hz Tan δ	DxL [mm]	Product Code # = variable value, see fixing code in the product code
400 VDC Code: 2G Surge Voltage 450 VDC	**5 600**	11.0	41.8	18	19	18	0.15	64x195	HCGH2G562#D195PH
		10.6	40.3	18	19	20	0.15	77x155	HCGH2G562#E155PH
	6 800	11.6	44.1	15	15	20	0.15	77x155	HCGH2G682#E155PH
		12.3	46.7	15	15	20	0.15	90x157	HCGH2G682#F157PH
	8 200	13.2	50.2	12	15	20	0.15	77x171	HCGH2G822#E171PH
		13.6	51.7	12	15	20	0.15	90x157	HCGH2G822#F157PH
	10 000	16.2	61.6	10	15	20	0.15	90x196	HCGH2G103#F196PH
	14 000	19.2	73.0	9	8	20	0.15	90x196	HCGH2G143#F196PH
	15 000	19.6	74.5	6	8	20	0.15	90x196	HCGH2G153#F196PH
450 VDC Code: 2W Surge Voltage 500 VDC	**1 500**	3.8	14.4	67	70	17	0.15	51x105	HCGH2W152#C105PH
	2 200	5.5	20.9	46	48	20	0.15	77x103	HCGH2W222#E103PH
	4 700	8.9	33.8	24	26	20	0.15	77x144	HCGH2W472#E144PH
	5 600	9.8	37.2	21	22	20	0.15	77x144	HCGH2W562#E144PH
	6 000	10.4	39.3	19	20	20	0.15	77x155	HCGH2W602#E155PH

* Please contact us if load condition exceeds terminals related $I_{r\,max}$ referred on page 13

Additional designs on request · Weitere Designs auf Anfrage

› Ripple Current Multiplier · Wechselstrommultiplikator

Frequency [Hz]	50/60	120	300	1k	≥ 10k
Multiplier	0.80	1.00	1.18	1.34	1.45

Ta (°C)	40	45	50	55	60	65	70	75	80	85	90	95	100	105
Multiplier 25-250 VDC	4.8	4.5	4.2	3.8	3.5	3.3	3.0	2.5	2.1	1.8	1.5	1.3	1.1	1.0
Multiplier 400-450 VDC	3.8	3.7	3.6	3.4	3.2	2.9	2.6	2.4	2.2	2.0	1.7	1.4	1.2	1.0

Forced cooling – Wind speed [m/sec]	v < 0.25	v ≥ 0.25	v ≥ 0.5	v ≥ 1.0	v ≥ 2.0	v ≥ 3.0
Multiplier	1.00	1.05	1.10	1.15	1.20	1.25

> Life Time Table · Brauchbarkeitsdauer – Tabelle

HCGH $V_r \leq 250V$	Useful life as function of ambient temperature and ripple current													
I_r at 105°C	x 1.0	x 1.1	x 1.3	x 1.5	x 1.8	x 2.1	x 2.5	x 3.0	x 3.3	x 3.5	x 3.8	x 4.2	x 4.5	x 4.8
T_a = 40°C	250	250	250	250	250	250	250	250	250	250	250	250	198	138
T_a = 45°C	250	250	250	250	250	250	250	250	250	250	250	175	125	
T_a = 50°C	250	250	250	250	250	250	250	250	250	221	166	110		
T_a = 55°C	250	250	250	250	250	250	250	212	166	139	105			
T_a = 60°C	250	250	250	250	250	241	190	134	105	88				
T_a = 65°C	236	230	216	201	177	152	120	84	66					
T_a = 70°C	149	145	137	127	112	96	76	53						
T_a = 75°C	94	92	86	80	71	61	48							
T_a = 80°C	59	58	54	51	44	38								
T_a = 85°C	37	36	34	32	28									
T_a = 90°C	23	23	21	20										
T_a = 95°C	15	14	13											
T_a = 100°C	9	9												
T_a = 105°C	6		khrs	Max. value limited to 250 000 hours.										

HCGH $V_r \geq 400V$	Useful life as function of ambient temperature and ripple current													
I_r at 105°C	x 1.0	x 1.2	x 1.4	x 1.7	x 2.0	x 2.2	x 2.4	x 2.6	x 2.9	x 3.2	x 3.4	x 3.6	x 3.7	x 3.8
T_a = 40°C	250	250	250	250	250	250	250	250	250	250	229	168	143	121
T_a = 45°C	250	250	250	250	250	250	250	250	250	194	145	106	90	
T_a = 50°C	250	250	250	250	250	250	250	250	183	122	91	67		
T_a = 55°C	250	250	250	250	250	250	208	167	116	77	58			
T_a = 60°C	250	250	250	248	194	161	132	105	73	49				
T_a = 65°C	238	216	193	157	123	102	83	66	46					
T_a = 70°C	150	136	122	99	77	64	52	42						
T_a = 75°C	95	86	77	62	49	40	33							
T_a = 80°C	60	54	48	39	31	25								
T_a = 85°C	38	34	30	25	19									
T_a = 90°C	24	21	19	15										
T_a = 95°C	15	13	12											
T_a = 100°C	9	8												
T_a = 105°C	6		khrs	Max. value limited to 250 000 hours.										

> Life Time Graph · Brauchbarkeitsdauer – Diagramm

Useful life depending on ambient temperature T_a and ripple current operating conditions I_r versus rated ripple current at the upper category temperature $I_{r,\ 105°C,120Hz}$

Brauchbarkeitsdauer in Abhängigkeit von Umgebungstemperatur T_a und Wechselstrombelastung I_r im Verhältnis zur max. Wechselstrombelastung bei oberer Kategorietemperatur $I_{r,\ 105°C,120Hz}$

$V_r \leq 250$ V

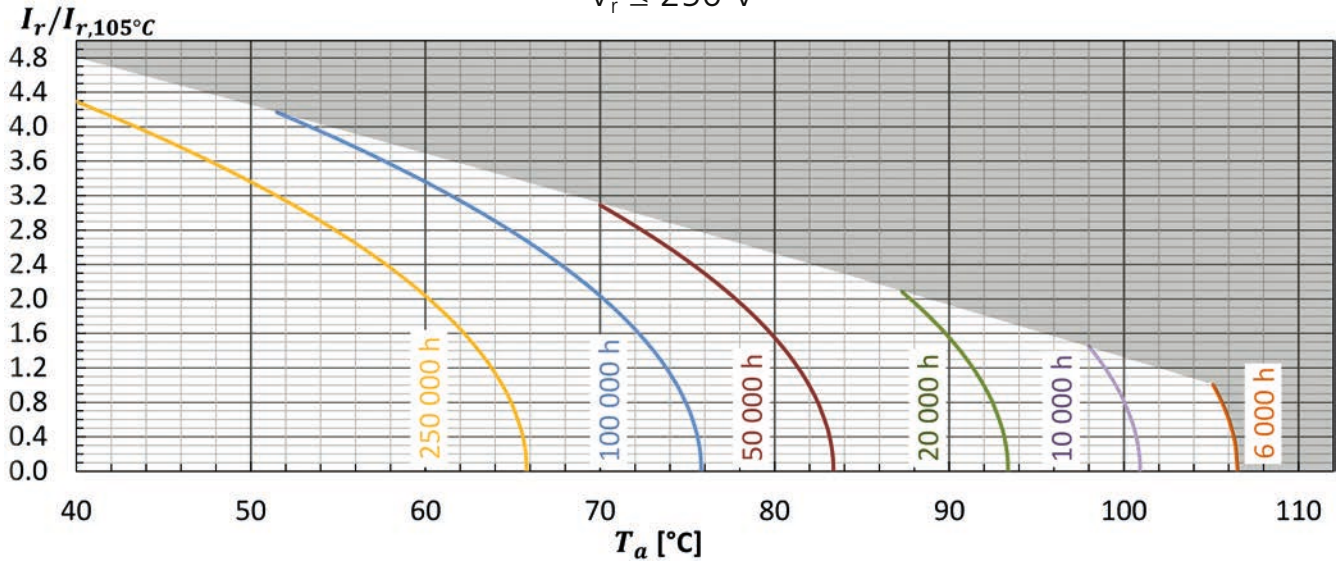

$V_r \geq 400$ V

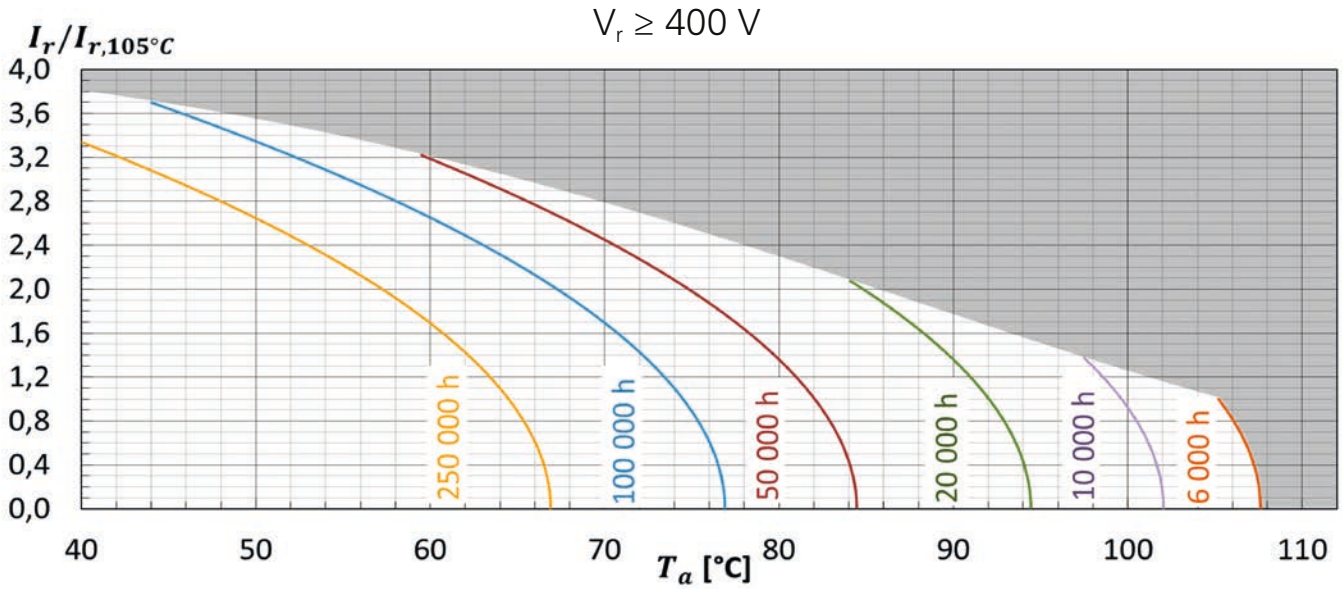

> Life Time Tests and Requirements · Anforderungen Brauchbarkeitsdauer

Life time test	Test procedure	End of Life criteria
Endurance test	T_a = 105°C; V_r, I_r applied 4000 hours	ΔC/C ≤ 10% (of initial value) Tanδ ≤ 175% (of specified value) I_L ≤ specified value
Useful life	T_a = 105°C; V_r, I_r applied 6000 hours	ΔC/C ≤ 15% (of initial value) Tanδ < 200% (of specified value) I_L ≤ specified value

Reference Specification: JIS C 5101-4, JIS C 5102, IEC 60384-4

VGR · Screw-Terminal · 6000 h/105 °C

High Ripple Current · Bottom cooling design · Low ESR

> Specifications · Spezifikationen

Items	Characteristics
Temperature range	-40°C ~ + 105°C
Capacitance tolerance (at 20°C)	Standard +/- 20%, -10/+30% on request
Surge voltage / Ripple voltage	Repetitive max. 30 sec per 6 Minutes / ≤ 70V
Leakage current max. I_L (20°C, 5 min)	0.01 • C • V_r [µA] or 5 mA, which is smaller.
Useful life	6000 hours at 105°C
Field failure rate	0.5 FIT = 0.5 • 10^{-9} Failures/hour
Reference standards	IEC 60384-4, JIS C 5101-4
Vibration	0.75mm, 10…55Hz, 10g, 3x2h
Outer materials	UL94-V0 / UL224-VW1 certified (cap / sleeve)
Sleeve withstanding voltage	4000 Vac / 1min between terminals bundled and plate*
Product Compliance	RoHS, REACH, Conflict Minerals a.o. – refer to p. 14–15

* Typical value

> Shape designation · Formbezeichnung

- additional information on p. 12–13 · Zusatzinformationen auf S. 12–13
- mounting accessories from p. 219 · Montagezubehör ab S. 219

Diameter 64 mm to 90 mm

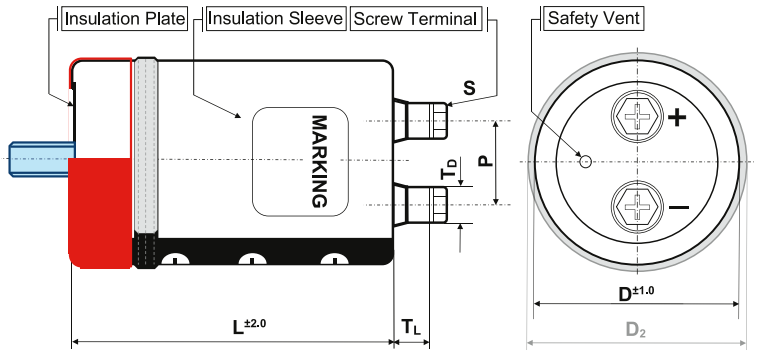

Diameter 51 mm

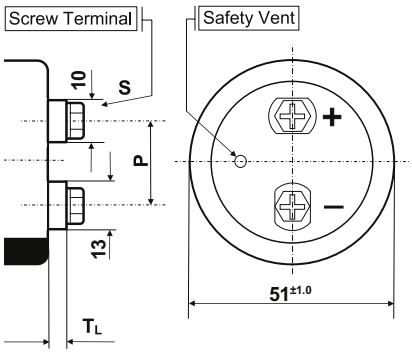

Shape code Features	B Bolt	I / Y double sleeve for 2/3 points metal Bracket	N + suffix WC blank bottom + seating ring	N standard
outer insulation sleeve	•	•	•	•
insulation plate	•	•		•
stud bolt	•			
bottom double sleeve		•		
integrated seating ring			•	

diameter code	ØD	available shape	P	S	T_L	T_D	Cap material
C	51	B, N, I, Y	22.0	M5x10	4.5	13/10	PH
D	64	B, N, I, Y	28.6	M5x10	8.0	11	PH
E	77	B, N, I, Y, WC	31.5	M6x12	9.0	12	PH
F	90	B, N, I, Y, WC	31.5	M6x12	8.0	12	PH

Size in mm

> Product Code · Bestellbezeichnung

Example: Series VGR · 12000 µF +/- 20 % · 400 V · D = 90 mm · L = 190 mm with Y-Bracket

VGR	2G	123	Y	F	190
Series name	Rated voltage code	Capacitance code	Shape code	Diameter code	Capacitance tolerance / Case length code

Capacitance tolerance: Ø : ± 20 % ; Q : -10 % ~ + 30 %

Case length code – length in mm (3 digits)

Specific features

Rated voltage code			
Code	Voltage	Code	Voltage
2V	350	2W	450
2G	400	2H	500

Rated VoltageCode (Surge Voltage) V_r [V DC]	Capacitance C_r [µF]	Ripple Current at 105°C/120Hz I_r [A RMS]	Ripple Current at 40°C/120Hz [A RMS]	ESR (typ) at 20°C/100Hz [mΩ]	Zmax at 20°C/10kHz [mΩ]	ESL (typ) [nH]	Dissipation Factor at 20°C/120Hz Tan δ	DxL [mm]	Product Code # = variable value, see fixing code in the product code
350 VDC Code: 2V Surge Voltage 400 VDC	**1 800**	9.1	21.0	30	31	17	0.20	51x96	VGR2V182#C096
	2 200	9.8	22.6	25	26	17	0.20	51x96	VGR2V222#C096
	2 700	11.0	25.3	20	21	17	0.20	51x109	VGR2V272#C109
	3 300	12.2	28.1	16	19	17	0.20	51x125	VGR2V332#C125
		15.1	34.7	16	19	18	0.20	64x107	VGR2V332#D107
	3 900	16.5	38.0	14	16	18	0.20	64x107	VGR2V392#D107
	4 700	18.0	42.5	11	13	18	0.20	64x107	VGR2V472#D107
		20.6	47.4	11	13	20	0.20	77x108	VGR2V472#E108
	5 600	20.1	46.3	10	11	18	0.20	64x147	VGR2V562#D147
		22.8	52.5	10	11	20	0.20	77x108	VGR2V562#E108
	6 800	22.3	51.3	8	10	18	0.20	64x164	VGR2V682#D164
		25.1	57.8	8	10	20	0.20	77x124	VGR2V682#E124
		28.6	65.8	8	10	20	0.20	90x110	VGR2V682#F110
	8 200	24.8	57.1	7	8	18	0.20	64x187	VGR2V822#D187
		27.6	63.5	7	8	20	0.20	77x148	VGR2V822#E148
		31.3	72.0	7	8	20	0.20	90x110	VGR2V822#F110
	10 000	30.6	70.4	5	7	20	0.20	77x165	VGR2V103#E165
		34.3	78.9	5	7	20	0.20	90x150	VGR2V103#F150
	12 000	33.8	77.8	5	5	20	0.20	77x188	VGR2V123#E188
		37.6	86.5	5	5	20	0.20	90x150	VGR2V123#F150
	15 000	41.6	95.7	4	5	20	0.20	90x167	VGR2V153#F167
	18 000	45.3	104.2	3	4	20	0.20	90x190	VGR2V183#F190
	22 000	48.3	111.1*	3	3	20	0.20	90x268	VGR2V223#F268
	27 000	50.0	115.0*	3	4	20	0.20	90x268	VGR2V273#F268
400 VDC Code: 2G Surge Voltage 450 VDC	**1 500**	8.4	19.4	35	38	17	0.20	51x96	VGR2G152#C096
	1 800	9.1	21.0	30	32	17	0.20	51x96	VGR2G182#C096
	2 200	10.2	23.5	24	26	17	0.20	51x109	VGR2G222#C109
	2 700	11.4	26.3	20	22	17	0.20	51x125	VGR2G272#C125
		13.6	31.3	20	22	18	0.20	64x107	VGR2G272#D107
	3 300	15.2	35.0	16	18	18	0.20	64x107	VGR2G332#D107
	3 900	16.7	38.5	14	16	18	0.20	64x123	VGR2G392#D123
		16.5	38.0	14	16	18	0.20	64x147	VGR2G392#D147
		18.8	43.2	14	16	20	0.20	77x108	VGR2G392#E108

Additional designs on request · Weitere Designs auf Anfrage

Rated VoltageCode (Surge Voltage) V_r [V DC]	Capacitance C_r [µF]	Ripple Current at 105°C/120Hz I_r [A RMS]	Ripple Current at 40°C/120Hz [A RMS]	ESR (typ) at 20°C/100Hz [mΩ]	Zmax at 20°C/10kHz [mΩ]	ESL (typ) [nH]	Dissipation Factor at 20°C/120Hz Tan δ	DxL [mm]	Product Code # = variable value, see fixing code in the product code
400 VDC Code: 2G Surge Voltage 450 VDC	**4 700**	18.4	42.4	11	13	18	0.20	64x147	VGR2G472#D147
		20.9	48.1	11	13	20	0.20	77x108	VGR2G472#E108
	5 600	20.2	46.5	10	11	18	0.20	64x164	VGR2G562#D164
		23.1	53.1	10	11	20	0.20	77x124	VGR2G562#E124
		26.0	59.8	10	11	20	0.20	90x110	VGR2G562#F110
	6 800	22.6	52.0	8	10	18	0.20	64x187	VGR2G682#D187
		25.1	57.8	8	10	20	0.20	77x148	VGR2G682#E148
		28.6	65.8	8	10	20	0.20	90x93	VGR2G682#F093
	8 200	27.4	63.0	7	8	20	0.20	77x148	VGR2G822#E148
		31.0	71.3	7	8	20	0.20	90x150	VGR2G822#F150
	10 000	30.9	71.1	5	7	20	0.20	77x188	VGR2G103#E188
		34.3	78.9	5	7	20	0.20	90x150	VGR2G103#F150
	12 000	37.2	85.6	5	5	20	0.20	90x167	VGR2G123#F167
	15 000	41.4	95.2	4	5	20	0.20	90x190	VGR2G153#F190
		40.4	92.9	4	5	20	0.20	90x230	VGR2G153#F230
	18 000	43.7	100.5*	3	4	20	0.20	90x268	VGR2G183#F268
	22 000	45.1	103.8*	2	3	20	0.20	90x268	VGR2G223#F268
450 VDC Code: 2W Surge Voltage 500 VDC	**1 200**	7.9	18.2	44	47	17	0.20	51x96	VGR2W122#C096
	1 500	8.7	20.1	36	39	17	0.20	51x96	VGR2W152#C096
	1 800	9.7	22.4	30	33	17	0.20	51x109	VGR2W182#C109
		10.1	23.3	30	33	17	0.20	51x125	VGR2W182#C125
	2 200	10.9	25.1	24	27	17	0.20	51x125	VGR2W222#C125
		12.6	29.0	24	27	18	0.20	64x107	VGR2W222#D107
	2 700	14.1	32.5	20	22	18	0.20	64x107	VGR2W272#D107
		16.1	37.0	20	22	20	0.20	77x108	VGR2W272#E108
	3 300	15.8	36.4	16	18	18	0.20	64x123	VGR2W332#D123
		18.0	41.4	16	18	20	0.20	77x108	VGR2W332#E108
	3 900	17.2	39.6	14	16	18	0.20	64x147	VGR2W392#D147
		19.6	45.1	14	16	20	0.20	77x124	VGR2W392#E124
		22.3	51.3	14	16	20	0.20	90x110	VGR2W392#F110
	4 700	19.3	43.7	11	13	18	0.20	64x164	VGR2W472#D164
		21.6	49.7	11	13	20	0.20	77x139	VGR2W472#E139
		24.4	56.2	11	13	20	0.20	90x110	VGR2W472#F110
	5 600	21.1	48.6	10	11	18	0.20	64x187	VGR2W562#D187
		23.0	52.9	10	11	20	0.20	77x139	VGR2W562#E139
		26.5	61.0	10	11	20	0.20	90x126	VGR2W562#F126
	6 800	25.9	59.6	8	10	20	0.20	77x165	VGR2W682#E165
		29.0	66.7	8	10	20	0.20	90x150	VGR2W682#F150
	8 200	28.7	66.1	7	8	20	0.20	77x188	VGR2W822#E188
		31.8	73.1	7	8	20	0.20	90x150	VGR2W822#F150
	10 000	31.6	72.7	6	7	20	0.20	90x150	VGR2W103#F150
	12 000	38.1	87.6	5	7	20	0.20	90x190	VGR2W123#F190
	15 000	41.0	94.3	4	5	20	0.20	90x268	VGR2W153#F268
	18 000	41.9	96.4	3	4	20	0.20	90x268	VGR2W183#F268

Additional designs on request · Weitere Designs auf Anfrage

Rated VoltageCode (Surge Voltage) V_r [V DC]	Capacitance C_r [µF]	Ripple Current at 105°C/120Hz I_r [A RMS]	Ripple Current at 40°C/120Hz [A RMS]	ESR (typ) at 20°C/100Hz [mΩ]	Zmax at 20°C/10kHz [mΩ]	ESL (typ) [nH]	Dissipation Factor at 20°C/120Hz Tan δ	DxL [mm]	Product Code # = variable value, see fixing code in the product code
500 VDC Code: 2H Surge Voltage 550 VDC	**680**	4.6	10.6	85	90	17	0.20	51x96	VGR2H681#C096
	820	5.2	12.0	70	74	17	0.20	51x109	VGR2H821#C109
	1 000	5.7	13.2	58	62	17	0.20	51x109	VGR2H102#C109
	1 200	6.4	14.8	48	52	17	0.20	51x125	VGR2H122#C125
	1 500	8.4	19.3	38	41	18	0.20	64x107	VGR2H152#D107
	1 800	9.3	21.4	32	36	18	0.20	64x107	VGR2H182#D107
	2 200	10.3	23.7	26	30	18	0.20	64x123	VGR2H222#D123
		11.7	26.9	26	30	20	0.20	77x108	VGR2H222#E108
	2 700	11.5	26.5	22	26	18	0.20	64x147	VGR2H272#D147
		13.1	30.2	22	26	20	0.20	77x108	VGR2H272#E108
	3 300	13.0	29.9	18	21	18	0.20	64x187	VGR2H332#D187
		14.5	33.4	18	21	20	0.20	77x124	VGR2H332#E124
		16.5	38.0	18	21	20	0.20	90x110	VGR2H332#F110
	3 900	15.8	36.4	15	18	20	0.20	77x148	VGR2H392#E148
		17.9	41.2	15	18	20	0.20	90x110	VGR2H392#F110
	4 700	17.3	39.8	13	15	20	0.20	77x165	VGR2H472#E165
		19.6	45.1	13	15	20	0.20	90x126	VGR2H472#F126
	5 600	19.1	44.0	11	13	20	0.20	77x188	VGR2H562#E188
		21.2	48.8	11	13	20	0.20	90x150	VGR2H562#F150
	6 800	23.2	53.4	9	10	20	0.20	90x167	VGR2H682#F167
	8 200	25.3	58.2	8	8	20	0.20	90x190	VGR2H822#F190
	10 000	27.0	62.1	7	7	20	0.20	90x268	VGR2H103#F268
	12 000	29.8	68.5	5	6	20	0.20	90x230	VGR2H123#F230
	14 000	29.6	68.1	5	6	20	0.20	90x268	VGR2H143#F268

* Please contact us if load condition exceeds terminals related $I_{r\,max}$ referred on page 13

Additional designs on request · Weitere Designs auf Anfrage

> Ripple Current Multiplier · Wechselstrommultiplikator

Frequency [Hz]	50/60	120	300	1k	≥ 10k
Multiplier	0.80	1.00	1.18	1.34	1.45

Ta (°C)	40	50	60	65	70	75	80	85	90	95	100	105
Multiplier	2.3	2.1	2.0	1.9	1.9	1.8	1.7	1.6	1.4	1.2	1.1	1.0

Forced cooling – Wind speed [m/sec]	v < 0.25	v ≥ 0.25	v ≥ 0.5	v ≥ 1.0	v ≥ 2.0	v ≥ 3.0
Multiplier	1.00	1.07	1.15	1.25	1.30	1.35

Water cooled heatsink – size ratio [L/D]	1.10	1.25	1.40	1.55	1.70	2.00	2.50	3.00
Multiplier	2.0	1.9	1.7	1.6	1.5	1.4	1.2	1.1

> Life Time Table · Brauchbarkeitsdauer – Tabelle

VGR	Useful life as function of ambient temperature and ripple current											
I_r at 105°C	x 1.0	x 1.1	x 1.2	x 1.4	x 1.6	x 1.7	x 1.8	x 1.9	x 2.0	x 2.1	x 2.2	x 2.3
T_a = 40°C	250	250	250	250	250	250	250	250	213	152	106	73
T_a = 45°C	250	250	250	250	250	250	250	186	135	96	67	
T_a = 50°C	250	250	250	250	250	213	160	117	85	61		
T_a = 55°C	250	250	250	250	177	135	101	74	54	38		
T_a = 60°C	250	250	250	184	112	85	64	47	34			
T_a = 65°C	250	216	178	116	70	54	40	29				
T_a = 70°C	162	136	113	73	44	34	25	18				
T_a = 75°C	102	86	71	46	28	21	16					
T_a = 80°C	64	54	45	29	17	13						
T_a = 85°C	41	34	28	18	11							
T_a = 90°C	25	21	18	11								
T_a = 95°C	16	13	11									
T_a = 100°C	10	8										
T_a = 105°C	6		khrs	Max. value limited to 250 000 hours.								

> Life Time Graph · Brauchbarkeitsdauer – Diagramm

Useful life depending on ambient temperature T_a and ripple current operating conditions I_r versus rated ripple current at the upper category temperature $I_{r,\,105°C,120Hz}$

Brauchbarkeitsdauer in Abhängigkeit von Umgebungstemperatur T_a und Wechselstrombelastung I_r im Verhältnis zur max. Wechselstrombelastung bei oberer Kategorietemperatur $I_{r,\,105°C,120Hz}$

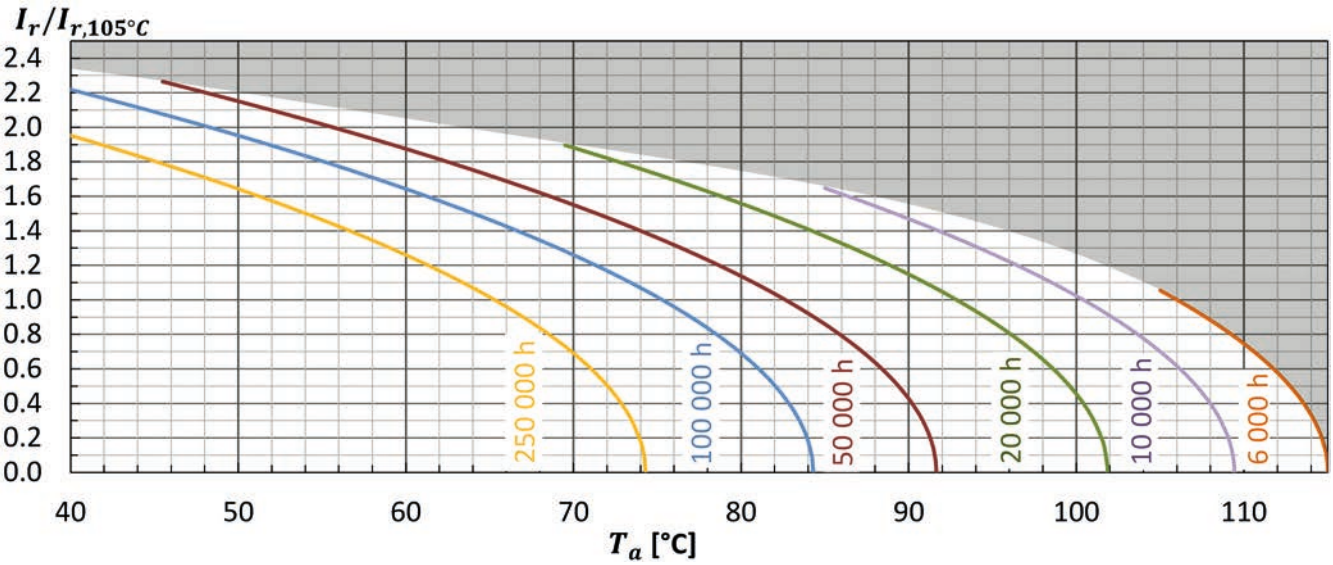

> Life Time Tests and Requirements · Anforderungen Brauchbarkeitsdauer

Life time test	Test procedure	End of Life criteria
Endurance test	T_a = 105°C; V_r, I_r applied 4000 hours	ΔC/C ≤ 10% (of initial value) Tanδ ≤ 175% (of specified value) I_L ≤ specified value
Useful life	T_a = 105°C; V_r, I_r applied 6000 hours	ΔC/C ≤ 15% (of initial value) Tanδ < 200% (of specified value) I_L ≤ specified value

Reference Specification: JIS C 5101-4, JIS C 5102, IEC 60384-4

VGLR · Screw-Terminal · 12000 h/105 °C

Long Life · High Ripple Current · Bottom cooling design · Low ESR

› Specifications · Spezifikationen

Items	Characteristics
Temperature range	-40°C ~ + 105°C
Capacitance tolerance (at 20°C)	Standard +/- 20%, -10/+30% on request
Surge voltage / Ripple voltage	Repetitive max. 30 sec per 6 Minutes / ≤ 50V
Leakage current max. I_L (20°C, 5 min)	0.01 • C • V_r [µA] or 5 mA, which is smaller.
Useful life	12 000 hours at 105°C
Field failure rate	0.5 FIT = 0.5 • 10^{-9} Failures/hour
Reference standards	IEC 60384-4, JIS C 5101-4
Vibration	0.75mm, 10…55Hz, 10g, 3x2h
Outer materials	UL94-V0 / UL224-VW1 certified (cap / sleeve)
Sleeve withstanding voltage	4000 Vac / 1min between terminals bundled and plate*
Product Compliance	RoHS, REACH, Conflict Minerals a.o. – refer to p. 14–15

* Typical value

› Shape designation · Formbezeichnung

- additional information on p. 12–13 · Zusatzinformationen auf S. 12–13
- mounting accessories from p. 219 · Montagezubehör ab S. 219

Diameter 64 mm to 90 mm

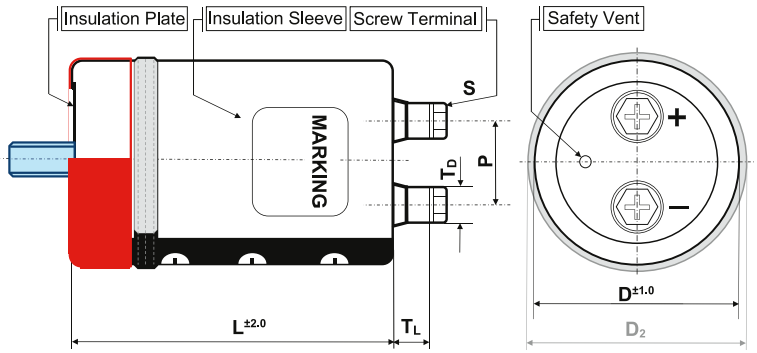

Diameter 51 mm

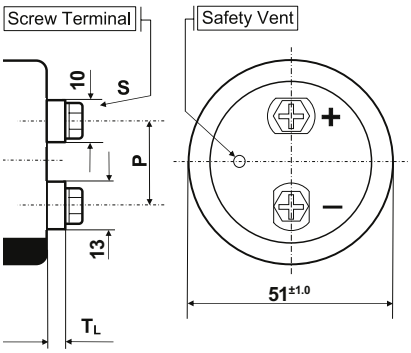

Shape code Features	B Bolt	I / Y double sleeve for 2/3 points metal Bracket	N + suffix WC blank bottom + seating ring	N standard
outer insulation sleeve	•	•	•	•
insulation plate	•	•		•
stud bolt	•			
bottom double sleeve		•		
integrated seating ring			•	

diameter code	ØD	available shape	P	S	T_L	T_D	Cap material
C	51	B, N, I, Y	22.0	M5x10	4.5	13/10	PH
D	64	B, N, I, Y	28.6	M5x10	8.0	11	PH
E	77	B, N, I, Y, WC	31.5	M6x12	9.0	12	PH
F	90	B, N, I, Y, WC	31.5	M6x12	8.0	12	PH

Size in mm

> Product Code · Bestellbezeichnung

Example: Series VGLR · 12000 µF +/- 20 % · 400 V · D = 90 mm · L = 190 mm for bottom cooling

VGLR **2G** **123** **N** **F** **190** **WC**

- **VGLR**: Series name
- **2G**: Rated voltage code
- **123**: Capacitance code
- **N**: Shape code
- **F**: Diameter code
- **190**: Case length code – length in mm (3 digits)
- **WC**: Specific features

Capacitance tolerance:
Ø : ± 20 %
Q : -10 % ~ + 30 %

Rated voltage code			
Code	Voltage	Code	Voltage
2V	350	2W	450
2G	400	2H	500

Rated VoltageCode (Surge Voltage) V_r [V DC]	Capacitance C_r [µF]	Ripple Current at 105°C/120Hz I_r [A RMS]	Ripple Current at 40°C/120Hz [A RMS]	ESR (typ) at 20°C/100Hz [mΩ]	Zmax at 20°C/10kHz [mΩ]	ESL (typ) [nH]	Dissipation Factor at 20°C/120Hz Tan δ	DxL [mm]	Product Code # = variable value, see fixing code in the product code
350 VDC Code: 2V Surge Voltage 400 VDC	**1 800**	9.1	21.0	30	31	17	0.20	51x96	VGLR2V182#C096
	2 200	9.8	22.6	25	26	17	0.20	51x96	VGLR2V222#C096
		10.2	23.5	25	26	17	0.20	51x109	VGLR2V222#C109
	2 700	11.0	25.3	20	21	17	0.20	51x109	VGLR2V272#C109
		11.4	26.3	20	21	17	0.20	51x125	VGLR2V272#C125
	3 300	12.2	28.1	16	19	17	0.20	51x125	VGLR2V332#C125
		15.1	34.8	16	19	18	0.20	64x107	VGLR2V332#D107
	3 900	16.5	38.0	14	16	18	0.20	64x107	VGLR2V392#D107
		16.8	38.7	14	16	18	0.20	64x123	VGLR2V392#D123
	4 700	18.3	42.1	11	13	18	0.20	64x123	VGLR2V472#D123
		20.6	47.4	11	13	20	0.20	77x108	VGLR2V472#E108
	5 600	20.1	46.3	10	10	18	0.20	64x147	VGLR2V562#D147
		22.8	52.5	10	10	20	0.20	77x108	VGLR2V562#E108
	6 800	22.3	51.3	8	10	18	0.20	64x164	VGLR2V682#D164
		25.1	57.8	8	10	20	0.20	77x124	VGLR2V682#E124
		28.6	65.8	8	10	20	0.20	90x110	VGLR2V682#F110
	8 200	24.8	57.1	7	7	18	0.20	64x187	VGLR2V822#D187
		27.6	63.5	7	7	20	0.20	77x148	VGLR2V822#E148
		31.3	72.0	7	7	20	0.20	90x110	VGLR2V822#F110
	10 000	30.6	70.4	5	6	20	0.20	77x165	VGLR2V103#E165
		34.3	78.9	5	6	20	0.20	90x150	VGLR2V103#F150
	12 000	33.8	77.8	5	5	20	0.20	77x188	VGLR2V123#E188
		37.6	86.5	5	5	20	0.20	90x150	VGLR2V123#F150
	15 000	39.2	90.2	4	4	20	0.20	77x228	VGLR2V153#E228
		41.6	95.7	4	4	20	0.20	90x167	VGLR2V153#F167
	18 000	45.3	104.2*	3	4	20	0.20	90x190	VGLR2V183#F190
	22 000	48.3	111.1*	3	3	20	0.20	90x268	VGLR2V223#F268
	27 000	50.0	115.0*	2	3	20	0.20	90x268	VGLR2V273#F268
400 VDC Code: 2G Surge Voltage 450 VDC	**1 500**	8.4	19.4	35	38	17	0.20	51x96	VGLR2G152#C096
	1 800	9.1	21.0	30	32	17	0.20	51x96	VGLR2G182#C096
		9.4	21.7	30	32	17	0.20	51x109	VGLR2G182#C109
	2 200	10.2	23.5	24	26	17	0.20	51x109	VGLR2G222#C109

Additional designs on request · Weitere Designs auf Anfrage

AIC EUROPE GmbH · Sales & technical support of **AIC** capacitors · Telefon: +49 (0)2151-4943-5 · E-Mail: info@aic-europe.com · www.aic-europe.com

Rated VoltageCode (Surge Voltage) V_r [V DC]	Capacitance C_r [µF]	Ripple Current at 105°C/120Hz I_r [A RMS]	Ripple Current at 40°C/120Hz [A RMS]	ESR (typ) at 20°C/100Hz [mΩ]	Zmax at 20°C/10kHz [mΩ]	ESL (typ) [nH]	Dissipation Factor at 20°C/120Hz Tan δ	DxL [mm]	Product Code # = variable value, see fixing code in the product code
400 VDC Code: 2G Surge Voltage 450 VDC	**2 200**	10.6	24.4	24	26	17	0.20	51x125	VGLR2G222#C125
	2 700	11.4	26.3	20	22	17	0.20	51x125	VGLR2G272#C125
		13.6	31.3	20	22	18	0.20	64x107	VGLR2G272#D107
	3 300	15.2	35.0	16	18	18	0.20	64x107	VGLR2G332#D107
	3 900	16.7	38.5	14	16	18	0.20	64x123	VGLR2G392#D123
		18.8	43.3	14	16	20	0.20	77x108	VGLR2G392#E108
	4 700	18.4	42.4	11	12	18	0.20	64x147	VGLR2G472#D147
		20.9	48.1	11	12	20	0.20	77x108	VGLR2G472#E108
	5 600	20.2	46.5	10	11	18	0.20	64x164	VGLR2G562#D164
		23.1	53.2	10	11	20	0.20	77x124	VGLR2G562#E124
		26.0	59.8	10	11	20	0.20	90x110	VGLR2G562#F110
	6 800	22.6	52.0	8	9	20	0.20	64x187	VGLR2G682#D187
		25.1	57.8	8	9	20	0.20	77x148	VGLR2G682#E148
		28.5	65.6	8	9	20	0.20	90x110	VGLR2G682#F110
	8 200	27.3	62.8	7	8	20	0.20	77x148	VGLR2G822#E148
		31.0	71.3	7	8	20	0.20	90x150	VGLR2G822#F150
	10 000	30.9	71.1	5	6	20	0.20	77x188	VGLR2G103#E188
		34.3	78.9	5	6	20	0.20	90x150	VGLR2G103#F150
	12 000	37.2	85.6	5	5	20	0.20	90x167	VGLR2G123#F167
	15 000	41.4	95.3	4	4	20	0.20	90x190	VGLR2G153#F190
	18 000	43.7	100.6*	3	4	20	0.20	90x268	VGLR2G183#F268
	22 000	45.1	103.8*	3	3	20	0.20	90x268	VGLR2G223#F268
450 VDC Code: 2W Surge Voltage 500 VDC	**1 200**	7.9	18.2	44	47	17	0.20	51x96	VGLR2W122#C096
	1 500	8.7	20.1	35	37	17	0.20	51x96	VGLR2W152#C096
		9.0	20.7	35	37	17	0.20	51x109	VGLR2W152#C109
	1 800	9.7	22.4	30	31	17	0.20	51x109	VGLR2W182#C109
		10.1	23.3	30	31	17	0.20	51x125	VGLR2W182#C125
	2 200	10.9	25.1	24	27	17	0.20	51x125	VGLR2W222#C125
		12.6	29.0	24	27	18	0.20	64x107	VGLR2W222#D107
		14.9	34.3	24	27	20	0.20	77x77	VGLR2W222#E077
	2 700	14.1	32.5	20	22	18	0.20	64x107	VGLR2W272#D107
		16.1	37.1	20	22	20	0.20	77x108	VGLR2W272#E108
	3 300	15.8	36.4	16	18	18	0.20	64x123	VGLR2W332#D123
		18.5	42.6	16	18	20	0.20	77x108	VGLR2W332#E108
		13.1	30.2	16	18	20	0.20	90x97	VGLR2W332#F097
	3 900	17.2	39.6	14	16	18	0.20	64x147	VGLR2W392#D147
		19.6	45.1	14	16	20	0.20	77x124	VGLR2W392#E124
		22.3	51.3	14	16	20	0.20	90x110	VGLR2W392#F110
	4 700	19.0	43.7	11	12	18	0.20	64x164	VGLR2W472#D164
		21.5	49.5	11	12	20	0.20	77x148	VGLR2W472#E148
		24.4	56.2	11	12	20	0.20	90x110	VGLR2W472#F110
	5 600	21.1	48.6	10	10	18	0.20	64x187	VGLR2W562#D187
		23.5	54.1	10	10	20	0.20	77x148	VGLR2W562#E148
		26.5	61.0	10	10	20	0.20	90x126	VGLR2W562#F126

Additional designs on request · Weitere Designs auf Anfrage

Rated VoltageCode (Surge Voltage) V_r [V DC]	Capacitance C_r [µF]	Ripple Current at 105°C/120Hz I_r [A RMS]	Ripple Current at 40°C/120Hz [A RMS]	ESR (typ) at 20°C/100Hz [mΩ]	Zmax at 20°C/10kHz [mΩ]	ESL (typ) [nH]	Dissipation Factor at 20°C/120Hz Tan δ	DxL [mm]	Product Code # = variable value, see fixing code in the product code
450 VDC Code: 2W Surge Voltage 500 VDC	**6 000**	24.0	55.2	9	10	20	0.20	77x148	VGLR2W602#E148
	6 800	25.9	59.6	8	9	20	0.20	77x165	VGLR2W682#E165
		29.0	66.7	8	9	20	0.20	90x150	VGLR2W682#F150
	8 200	28.7	66.1	7	7	20	0.20	77x188	VGLR2W822#E188
		31.6	72.7	7	7	20	0.20	90x167	VGLR2W822#F167
	10 000	34.7	79.9	5	6	20	0.20	90x190	VGLR2W103#F190
	15 000	41.0	94.3	4	5	20	0.20	90x268	VGLR2W153#F268
	18 000	41.9	96.4	3	4	20	0.20	90x268	VGLR2W183#F268
500 VDC Code: 2H Surge Voltage 550 VDC	**680**	4.6	10.6	85	90	17	0.20	51x96	VGLR2H681#C096
	820	5.0	11.5	70	74	17	0.20	51x96	VGLR2H821#C096
		5.2	12.0	70	74	17	0.20	51x109	VGLR2H821#C109
	1 000	5.7	13.2	58	61	17	0.20	51x109	VGLR2H102#C109
	1 200	6.4	14.8	48	51	17	0.20	51x125	VGLR2H122#C125
	1 500	8.4	19.4	38	41	18	0.20	64x107	VGLR2H152#D107
	1 800	9.3	21.4	32	34	18	0.20	64x107	VGLR2H182#D107
	2 200	10.3	23.7	26	30	18	0.20	64x123	VGLR2H222#D123
		11.7	27.0	26	30	20	0.20	77x108	VGLR2H222#E108
	2 700	11.5	26.5	22	23	18	0.20	64x147	VGLR2H272#D147
		13.1	30.2	22	23	20	0.20	77x108	VGLR2H272#E108
	3 300	13.0	29.9	18	19	18	0.20	64x187	VGLR2H332#D187
		14.5	33.4	18	19	20	0.20	77x124	VGLR2H332#E124
		16.5	38.0	18	19	20	0.20	90x110	VGLR2H332#F110
	3 900	15.8	36.4	15	16	20	0.20	77x148	VGLR2H392#E148
		17.9	41.2	15	16	20	0.20	90x110	VGLR2H392#F110
	4 400	16.6	38.2	14	15	20	0.20	77x148	VGLR2H442#E148
	4 700	17.3	39.8	13	13	20	0.20	77x165	VGLR2H472#E165
		19.6	45.1	13	13	20	0.20	90x126	VGLR2H472#F126
	5 600	19.1	44.0	11	11	20	0.20	77x188	VGLR2H562#E188
		21.2	48.8	11	11	20	0.20	90x150	VGLR2H562#F150
	6 800	21.8	50.2	9	10	20	0.20	77x228	VGLR2H682#E228
		23.2	53.4	9	10	20	0.20	90x167	VGLR2H682#F167
	7 500	24.2	55.7	9	10	20	0.20	90x190	VGLR2H752#F190
	8 200	25.3	58.2	8	9	20	0.20	90x190	VGLR2H822#F190
	10 000	27.0	62.1	7	7	20	0.20	90x268	VGLR2H103#F268
	11 000	28.6	65.8	6	7	20	0.20	90x230	VGLR2H113#F230
	12 000	27.7	63.8	5	5	20	0.20	90x268	VGLR2H123#F268

* Please contact us if load condition exceeds terminals related $I_{r\,max}$ referred on page 13

Additional designs on request · Weitere Designs auf Anfrage

› Ripple Current Multiplier · Wechselstrommultiplikator

Frequency [Hz]	50/60	120	300	1k	≥ 10k
Multiplier	0.80	1.00	1.18	1.34	1.45

Ta (°C)	40	50	60	65	70	75	80	85	90	95	100	105
Multiplier	2.3	2.1	2.0	1.9	1.9	1.8	1.7	1.6	1.4	1.2	1.1	1.0

Forced cooling – Wind speed [m/sec]	v < 0.25	v ≥ 0.25	v ≥ 0.5	v ≥ 1.0	v ≥ 2.0	v ≥ 3.0
Multiplier	1.00	1.07	1.15	1.25	1.30	1.35

Water cooled heatsink – size ratio [L/D]	1.10	1.25	1.40	1.55	1.70	2.00	2.50	3.00
Multiplier	2.0	1.9	1.7	1.6	1.5	1.4	1.2	1.1

› Life Time Table · Brauchbarkeitsdauer – Tabelle

VGLR	Useful life as function of ambient temperature and ripple current											
I_r at 105°C	x 1.0	x 1.1	x 1.2	x 1.4	x 1.6	x 1.7	x 1.8	x 1.9	x 2.0	x 2.1	x 2.2	x 2.3
T_a = 40°C	250	250	250	250	250	250	250	250	250	250	213	147
T_a = 45°C	250	250	250	250	250	250	250	250	250	192	135	
T_a = 50°C	250	250	250	250	250	250	250	235	171	122		
T_a = 55°C	250	250	250	250	250	250	202	149	108	77		
T_a = 60°C	250	250	250	250	224	170	128	94	68			
T_a = 65°C	250	250	250	232	141	108	81	59				
T_a = 70°C	250	250	226	147	89	68	51	37				
T_a = 75°C	205	172	142	93	56	43	32					
T_a = 80°C	129	109	90	58	35	27						
T_a = 85°C	82	69	57	37	22							
T_a = 90°C	51	43	36	23								
T_a = 95°C	32	27	22									
T_a = 100°C	20	17										
T_a = 105°C	12											

khrs Max. value limited to 250 000 hours.

> Life Time Graph · Brauchbarkeitsdauer – Diagramm

Useful life depending on ambient temperature T_a and ripple current operating conditions I_r versus rated ripple current at the upper category temperature $I_{r,\ 105°C,120Hz}$

Brauchbarkeitsdauer in Abhängigkeit von Umgebungstemperatur T_a und Wechselstrombelastung I_r im Verhältnis zur max. Wechselstrombelastung bei oberer Kategorietemperatur $I_{r,\ 105°C,120Hz}$

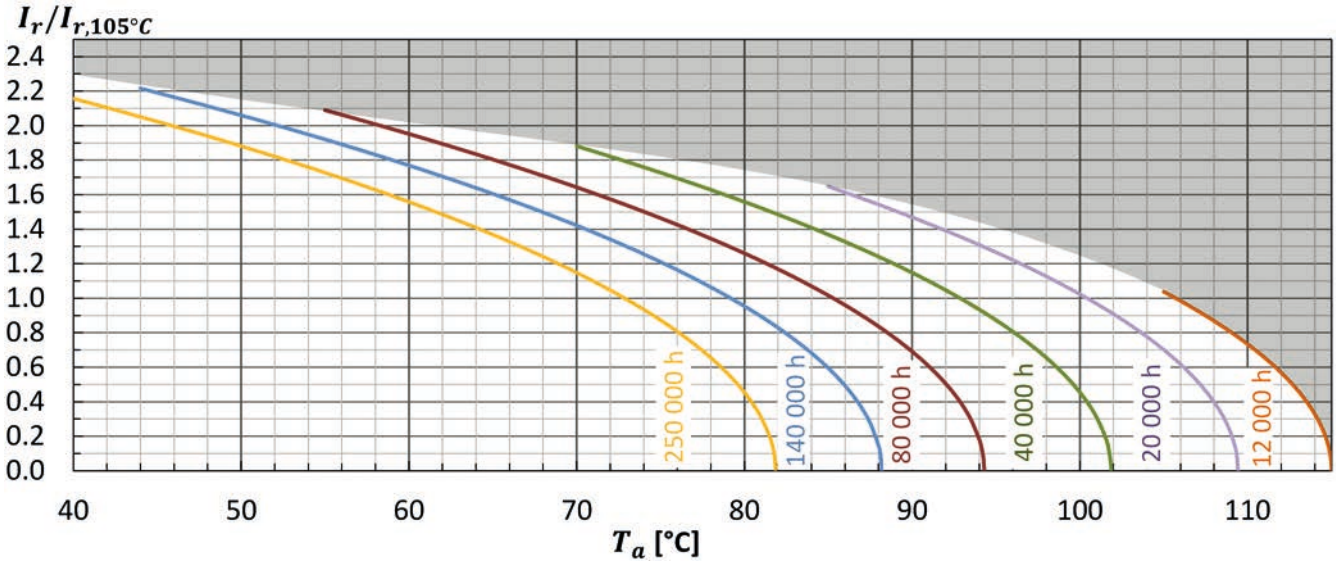

> Life Time Tests and Requirements · Anforderungen Brauchbarkeitsdauer

Life time test	Test procedure	End of Life criteria
Endurance test	T_a = 105°C; V_r, I_r applied 8000 hours	ΔC/C ≤ 10% (of initial value) Tanδ ≤ 175% (of specified value) I_L ≤ specified value
Useful life	T_a = 105°C; V_r, I_r applied 12000 hours	ΔC/C ≤ 15% (of initial value) Tanδ < 200% (of specified value) I_L ≤ specified value

Reference Specification: JIS C 5101-4, JIS C 5102, IEC 60384-4

Mounting · Befestigung

› Bracket mounting · Schellenbefestigung

Capacitor fixing symbol code „Y“, „I“ or „X“

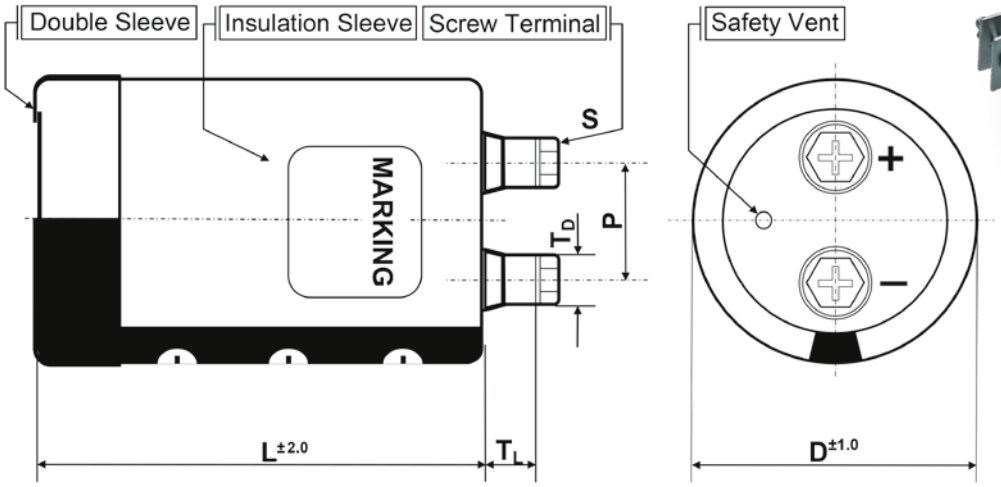

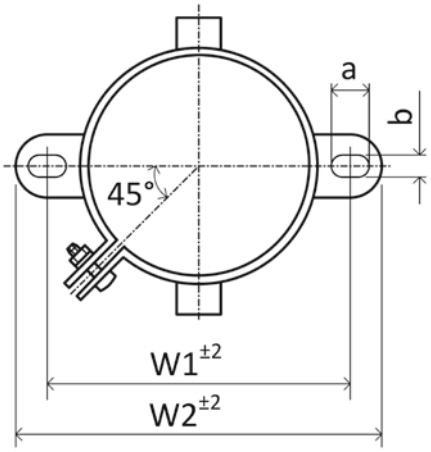

I-Bracket (for ØD = 36–90 mm)

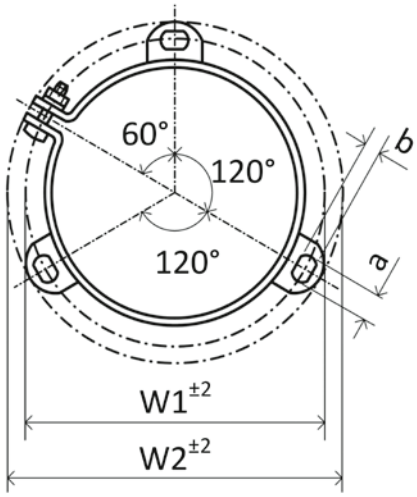

Y-Bracket (for ØD = 51–101 mm)

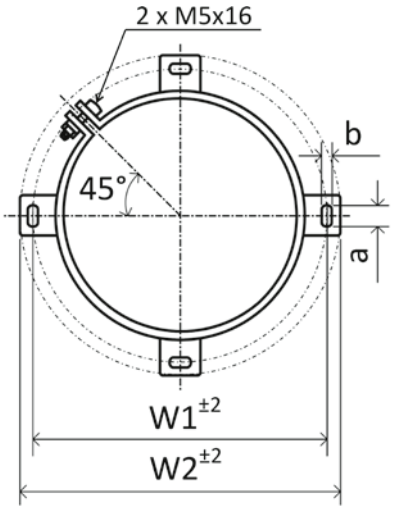

X-Bracket (for ØD = 121 mm)

For bracket mounting there is free of charge delivery of a metal bracket including capacitor.

Bei Schellenbefestigung wird die Metallschelle kostenlos mit dem Kondensator geliefert.

› Case size & dimensions · Bauformen

Capacitor	I-Bracket				Y-Bracket				X-Bracket			
ØD	W1	W2	a	b	W1	W2	a	b	W1	W2	a	b
36	48.0	58.0	6.0	3.5								
51	68.0	80.0	6.0	4.5	63.5	73.0	7.0	4.5				
64	81.0	93.0	6.0	4.5	76.2	85.1	7.0	4.5				
77	93.5	106.0	6.0	4.5	88.9	98.4	7.0	4.5				
90	108.0	120.5	7.0	5.0	101.6	111.1	7.0	4.5				
101					115.0	127.0	8.0	5.5				
121									145.0	158.0	8.0	6.0

Size in mm

› Stud bolt mounting accessories · Zubehör Bolzenbefestigung

Capacitor fixing symbol code „B“

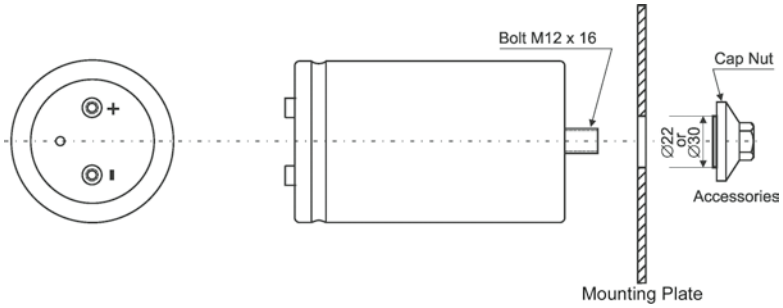

› Reinforced cap nut of nylon for screw-thread M12
Verstärkte Hutmutter aus Nylon für Gewinde M12

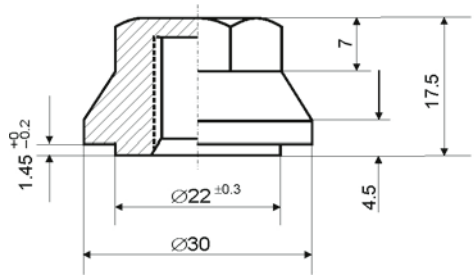

Product Code: **CNN30M12** (Ø 30mm)

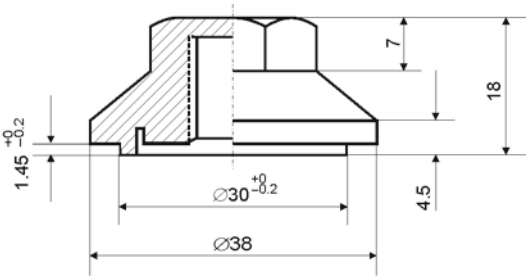

Product Code: **CNN38M12** (Ø 38mm)

› Insulating washer of Polypropylene PPH
Isolierscheibe aus Polypropylene PPH

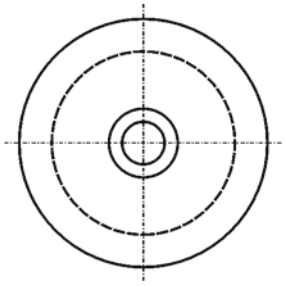

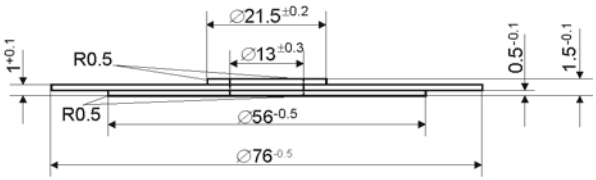

Product Code: **K500 – ISO – 77 – 13** (for capacitor ØD = 77mm and ØD = 90mm)

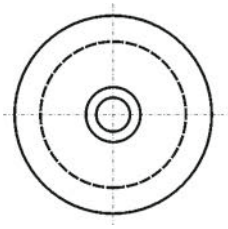

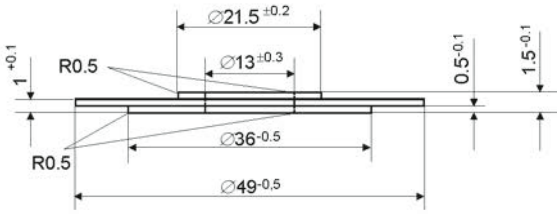

Product Code: **K500 – ISO – 49 – 13** (for capacitor ØD = 51mm and ØD = 64mm)

Safety-Holder of PBT · Sicherheitshalter aus PBT

Capacitor fixing symbol code „N“

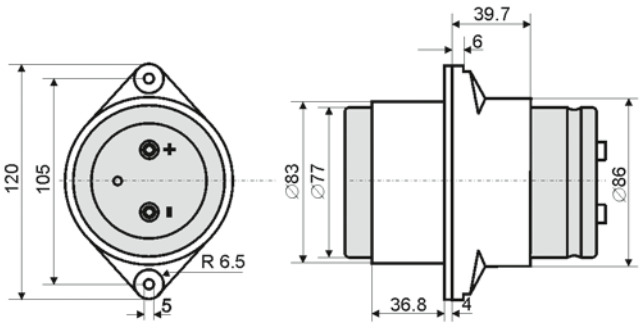

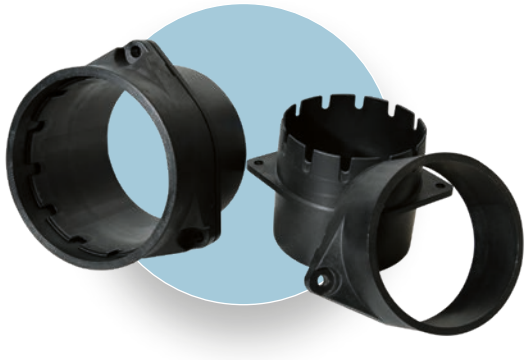

Product Code: **PBT – 77 – BF** (for capacitor ØD = 77mm)

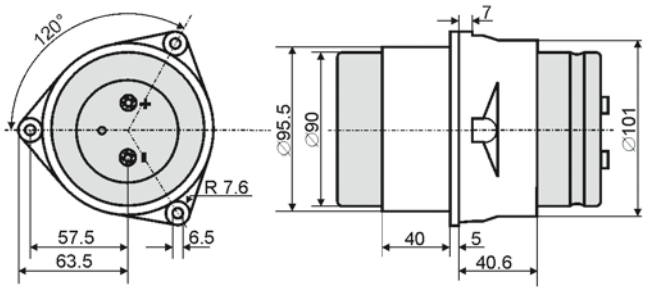

Product Code: **PBT – 90mm** (for capacitor ØD = 90mm)

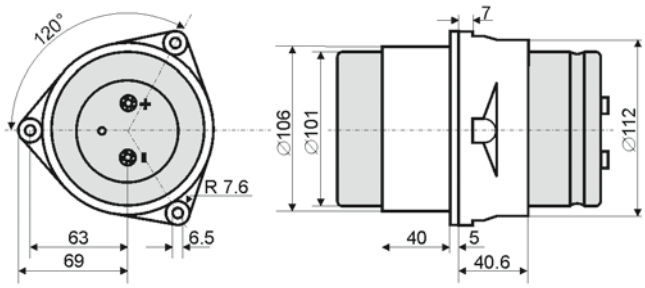

Product Code: **PBT – 101** (for capacitor ØD = 101mm)

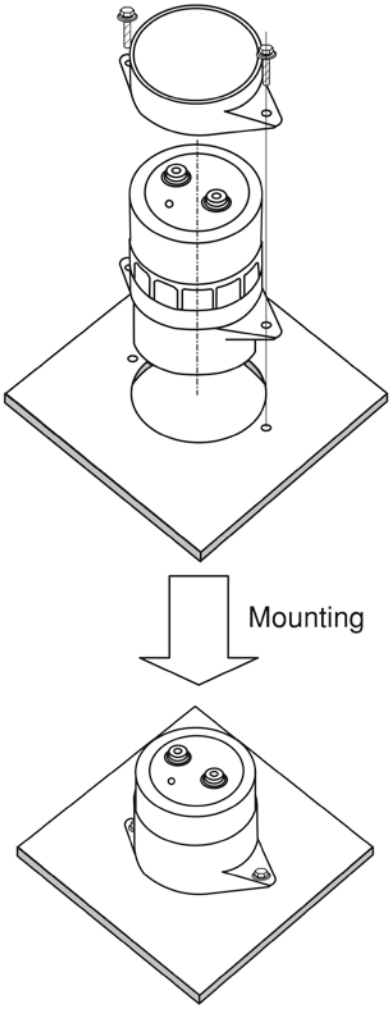

Features of Safety-Holders · Eigenschaften der Sicherheitshalter

- Better insulation and vibration characteristics compared with metal brackets.
- Flammability: UL94-V0.
- Test insulation voltage: 5.4 kV AC.

- Bessere Isolations- und Vibrationsfestigkeit gegenüber Metallschellen.
- Entflammbarkeit gem. UL94-V0.
- Prüfisolationsspannung: 5,4 kV AC.

› Safety-Holder of PBT for bottom cooling
Sicherheitshalter aus PBT für Bodenkühlung

Capacitor fixing symbol code „N“ in addition with „WC“
for all VF- and VG-series

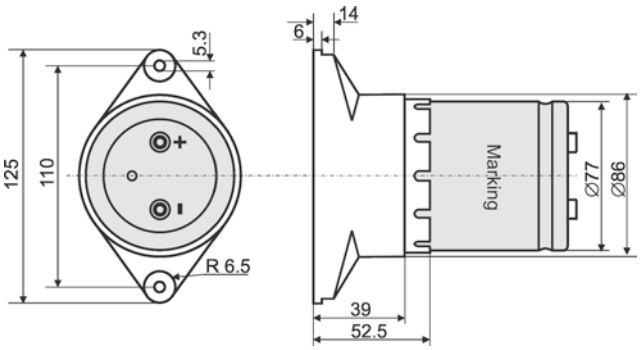

Product Code: **PBT – 77 – BC** (for capacitor ØD = 77mm)

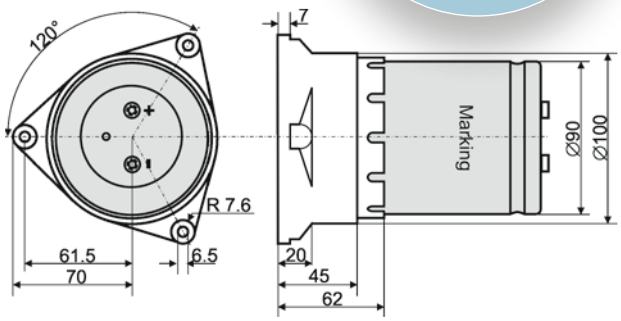

Product Code: **PBT – 90 – BC** (for capacitor ØD = 90mm)

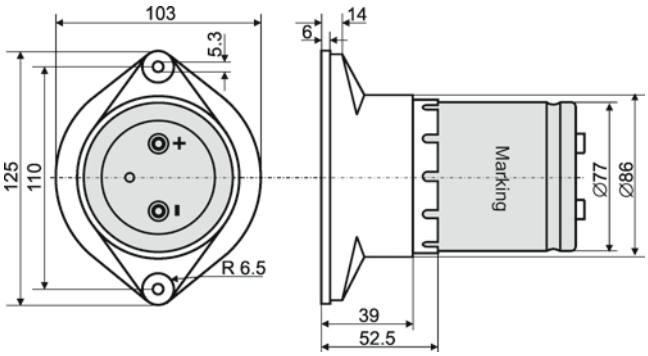

Product Code: **PBT – 77 – BC – UL**
(for capacitor ØD = 77mm,
meets creepage distance requirements according to UL)

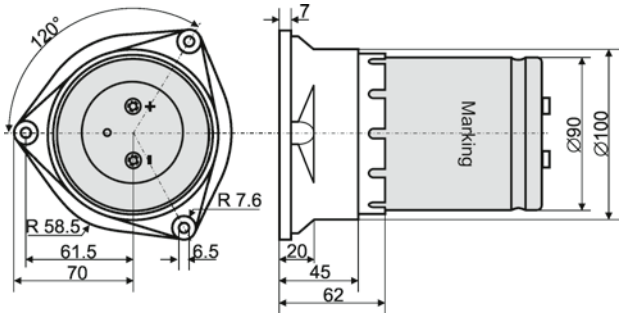

Product Code: **PBT – 90 – BC – UL**
(for capacitor ØD = 90mm,
meets creepage distance requirements according to UL)

› Insulating heat conductive thermal pad for bottom cooling
Isolierende Wärmeleitfolie für Bodenkühlung

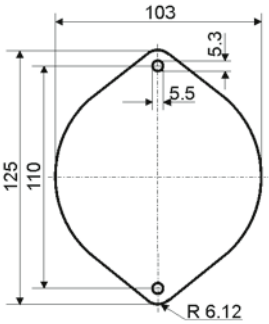

Product Code: **PBT – TCFOIL – 77**
(for capacitor ØD = 77mm)

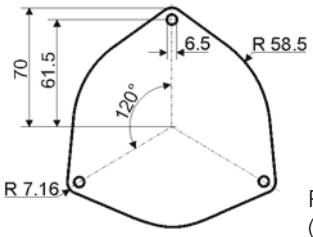

Product Code: **PBT – TCFOIL – 90**
(for capacitor ØD = 90mm)

› Features of thermal pad · Eigenschaften der Wärmeleitfolie

Properties	
Thickness (mm)	0.229
Hardness (Shore A)	92
Continuous Use Temperature (°C)	-60 to +180
Dielectric Breakdown Voltage (V_{AC})	5500
Thermal Conductivity (W/m-K)	1.6

Thermal Performance vs Pressure					
Pressure (psi)	**10**	**25**	**50**	**100**	**200**
TO-220 Thermal Performance (°C/W)	3.96	3.41	2.90	2.53	2.32
Thermal Impedance (°C-in²/W) (I)	0.95	0.75	0.61	0.47	0.41

Above data are values from material supplier. · Daten sind Werte des Materialherstellers.

› Dimensions of capacitor for bottom cooling
Abmessungen für Kondensator mit Bodenkühlung

Capacitor fixing symbol code „N“ in addition with suffix „WC“
for all VF- and VG-series

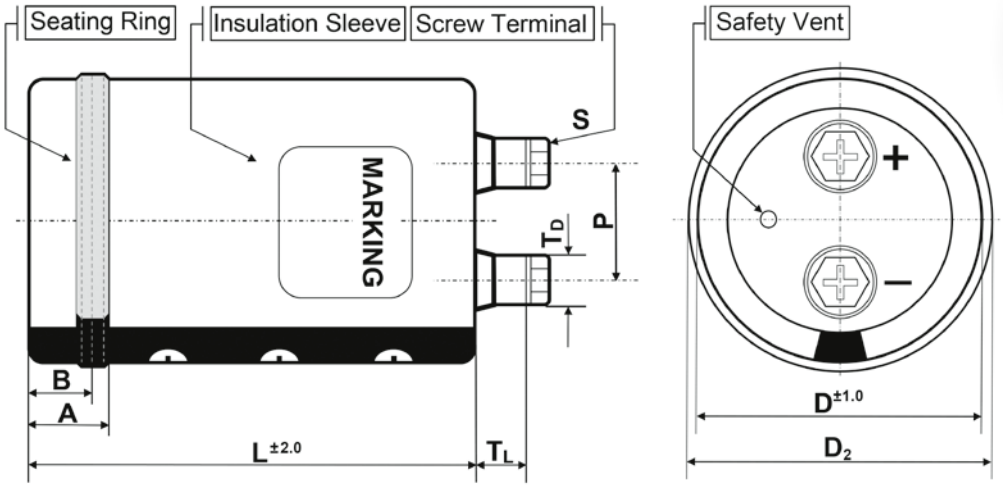

Ø Capacitor	A	B	D_2
ØD = 77 mm	24.5	$20.0^{\pm 0.2}$	$78.6^{\pm 0.5}$
ØD = 90 mm	24.3	$20.0^{\pm 0.5}$	$91{,}9^{\pm 0.5}$

Size in mm. Other dimensions depending on capacitor.

› Ripple current multipliers for forced bottom cooling on water cooled heat sink
Wechselstrommultiplikatoren für forcierte Bodenkühlung auf wassergekühltem Kühlkörper

The ripple current multiplier is depending on the cooling capacity and the capacitor dimensions ratio between diameter and length of case. The minimum correction coefficients based on capacitor dimensions only are shown in table below

Der Wechselstrommultiplikator ist abhängig von der Kühlleistung und den Abmessungen des Kondensators im Verhältnis Durchmesser zur Gehäuselänge. Folgende Tabelle enthält nur die Multiplikatoren (min) in Abhängigkeit der Kondensatorabmessungen.

Water cooled heatsink – size ratio [L/D]	1.10	1.25	1.40	1.55	1.70	2.00	2.50	3.00
Multiplier*	2.0	1.9	1.7	1.6	1.5	1.4	1.2	1.1

*I_{RMS} depending on
- usage of a thermal pad (electrically isolating) between capacitor and heat sink (we recommend a thermal conductivity ≥ 1.6 W/m-K).
- cooling water temperature ≤ 85 °C.

Apply the higher value out of the ambient and cooling water temperature for the ripple current multiplier.

Please contact us if you are interested in bottom cooling applications.

*I_{RMS} abhängig von
- der Verwendung einer Wärmeleitfolie (elektrisch isolierend) zwischen Kondensator und Kühlkörper (wir empfehlen eine thermische Leitfähigkeit ≥ 1.6 W/m-K).
- Kühlwasser-Temperatur ≤ 85 °C.

Wählen Sie den höheren Wert aus der Umgebungs- und Kühlwasser-Temperatur aus, für den Wechselstrommultiplikator.

Bitte kontaktieren Sie uns bei Interesse an einer Anwendung mit Bodenkühlung.

› Press ring of LDPE or TPE for mounting
Einpressring aus LDPE oder TPE zur Befestigung

Capacitor fixing symbol code „N“

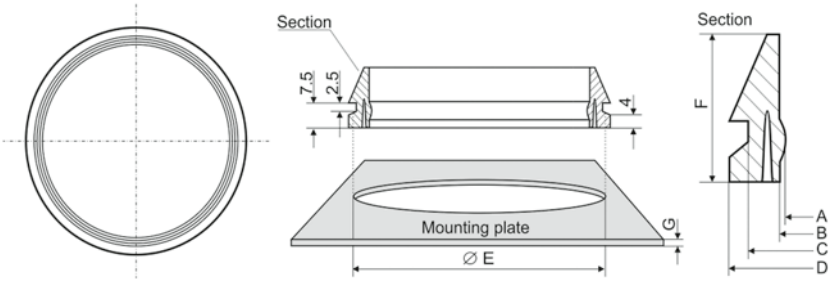

Ø Capacitor	A$^{+0.3}$	B$^{+0.3}$	C$^{+0.3}$	D$^{+0.3}$	E$^{+0.2}$	F$^{+0.2}$	G$^{-0.25}$	Product Code Agree with RoHS
64	62.3	64.1	70.5	74.5	71.2	18.0	3.0	K100 – 64 – BF
77	74.8	77.0	84.5	88.6	85.5	20.0	2.4	K100 – 77
90	88.0	90.0	97.9	102.0	98.6	23.5	3.0	K100 – 90 – BF

Press ring materials which agree with UL-94-V0 are available on request. / Size in mm

› Tightening torques for mounting options
Anzugsdrehmomente für Befestigungen

Mounting option	Screw	Tightening torque	
		Recommended	Max
Bracket		2.2 Nm	3.0 Nm
PBT-77-BF, PBT-77-BC / -UL	M4x20	1.7 Nm	1.9 Nm
PBT-90-BF, PBT-90-BC / -UL	M5x25	3.2 Nm	3.4 Nm
PBT-101	M5x25	3.2 Nm	3.4 Nm
Stud Bolt	M12x16	10.0 Nm	12.5 Nm*
Stud Bolt	M8x10	3.0 Nm	3.5 Nm

* This value signifies the strength of the bolt. The torque applied to the cap nuts of nylon (Product Code CNN30M12 or CNN38M12) depend on the size of the cap nut and the thickness of mounting plate.

Accessories · Zubehör

Balancing Resistors · Symmetriewiderstände · **CDR Series**

> Type, Rated Power, Resistance,Tolerance · Type, Leistung, Widerstand, Toleranz

TYPE	CDR07N	CDR15N	CDR15L	CDR20N	CDR20L
Capacitor terminal screw	M5	M5	M6	M5	M6
Hole diameter (mm)	5.4+-0.4	5.4±0.3	6.5±0.3	5.4±0.3	6.5±0.3
Pitch dimensions of capacitor (mm)	27.5+-1 to 32.0+-1	26.0±1 to 32.0±1		26.0±1 to 41.5±1	
Rated Power	7W (max. voltage 450V DC)	15W (max. voltage 700V DC)		20W (max. voltage 750V DC)	
Resistance Range	200Ω ~ 63kΩ	510Ω ~ 200kΩ		510Ω ~ 240kΩ	
Tolerance	± 10% (K), ± 5% (J), ± 3% (H)				
Resistor Element	metal oxide film resistor				

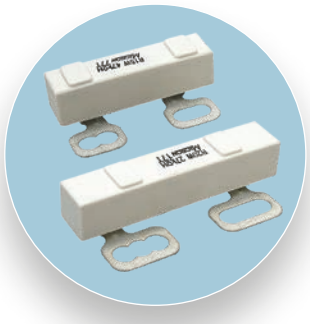

> Shape · Bauform

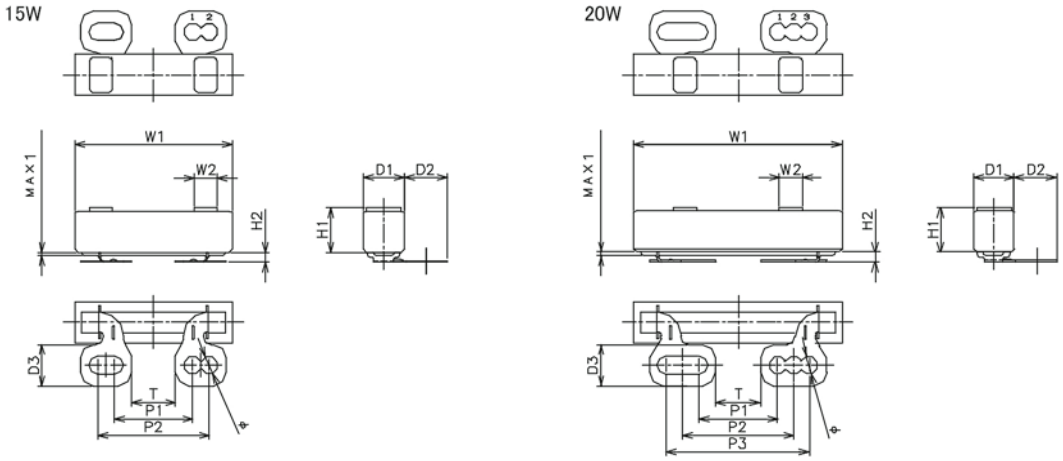

> Rated Power, Dimensions · Leistung, Abmessungen

Rated power (W)		Dimensions (mm)										
		H1	H2	W1	W2	D1	D2	D3	P1	P2	P3	T
07	N	9.5±1.5	1.0±1.0	35.0±1.5	–	9.5±1.2	14.0±1.2	9.5	27.5±1.0	32.6±1.0	–	16.0±1.0
15	N	13.5±1.5	3.0±1.0	48.0±1.5	7.0±0.5	12.5±1.2	13.0±1.2	12.5	24.0±1.0	34.0±1.0	–	13.5±1.0
15	L	13.5±1.5	3.0±1.0	48.0±1.5	7.0±0.5	12.5±1.2	13.0±1.2	12.5	24.0±1.0	34.0±1.0	–	13.5±1.0
20	N	13.5±1.5	3.0±1.0	63.5±1.5	7.0±0.5	12.5±1.2	13.0±1.2	12.5	24.0±1.0	33.75±1.0	43.5±1.0	13.5±1.0
20	L	13.5±1.5	3.0±1.0	63.5±1.5	7.0±0.5	12.5±1.2	13.0±1.2	12.5	24.0±1.0	33.75±1.0	43.5±1.0	13.5±1.0

> Product Code

Example: Series CDR

CDR 15L	**473**	**H**
Element Identification Code (Please refer to table above)	**Nominal Resistance** (Res. value = 47x10³ Ω)	Tolerance

Standard-Typen (Other values on request · Andere Werte auf Anfrage): CDR15L123H CDR15L473H CDR20L273H

Balancing Resistors · Symmetriewiderstände · **TCR Series**

> Type, Rated Power, Resistance,Tolerance · Type, Leistung, Widerstand, Toleranz

Rated Power	Nominal Resistance Range
5W	100Ω ~ 81kΩ
7W	200Ω ~ 100kΩ
10W	200Ω ~ 150kΩ
15W	510Ω ~ 200kΩ

Resistance Tolerance	
Code	Tolerance
H	± 3%
J	± 5%
K	± 10%

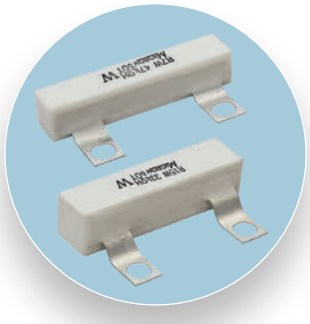

> Shape · Bauform

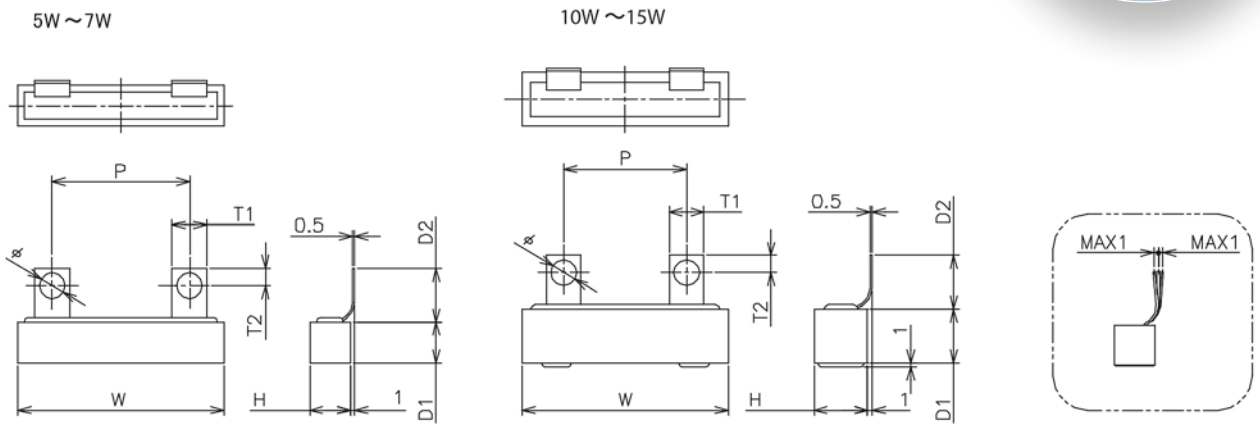

> Rated Power, Dimensions · Leistung, Abmessungen

Rated power (W)	Installation pitch		Dimensions (mm)							
			P	W	H	D1	D2	T1	T2	Ø
05	L	22.0 ± 1.0	22.0 ± 1.0	35.0 ± 1.5	9.5 ± 1.0	9.5 ± 1.0	12.5	8.0	4.0	6.0
07	M	28.6 ± 1.0	28.6 ± 1.0	48.0 ± 1.5	9.5 ± 1.0	9.5 ± 1.0	12.5	8.0	4.0	6.0
07	W	32.0 ± 1.0	32.0 ± 1.0	48.0 ± 1.5	9.5 ± 1.0	9.5 ± 1.0	12.5	8.0	4.0	6.0
10	M	28.6 ± 1.0	28.6 ± 1.0	48.0 ± 1.5	12.5 ± 1.2	12.5 ± 1.2	12.5	8.0	4.0	6.0
10	W	32.0 ± 1.0	32.0 ± 1.0	48.0 ± 1.5	12.5 ± 1.2	12.5 ± 1.2	12.5	8.0	4.0	6.0
15	W	32.0 ± 1.0	32.0 ± 1.0	48.0 ± 1.5	12.5 ± 1.2	12.5 ± 1.2	12.5	8.0	4.0	6.0

> Product Code

Example: Series TCR

TCR	05	M	823	H
Element Identification Code	Rated Power (for instance 5W)	Terminal Pitch	Nominal Resistance (for instance 82x103 Ω)	Tolerance
		W = 32.0 mm		
		M = 28.6 mm		
		L = 22.0 mm		

Standard-Typen (Other values on request · Andere Werte auf Anfrage):

TCR05L823H	TCR10M683H	TCR10W473H
TCR05M823H	TCR10W683H	TCR15W273H
TCR07L683H	TCR10M473H	TCR15W333H

› Spacer cap for M5 terminal of $AlMgSi_1$ (Only for terminal with outer diameter 10 mm)

Distanzkappe für Anschlüsse M5 aus $AlMgSi_1$ (Nur für Anschluss-Außendurchmesser mit 10 mm)

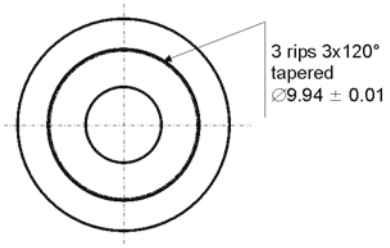

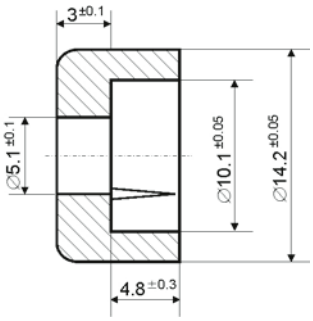

Product Code: **SC3 – 14M5**

› Insulating washer of Polyamide PA 6

Isolierscheibe aus Polyamid PA 6

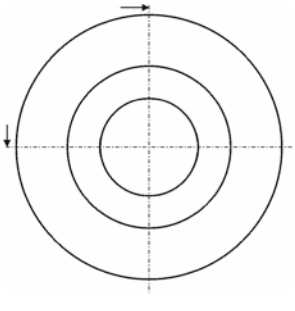

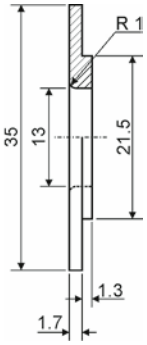

Product Code: **IWD – 35 – 13 – UL**

Handling Cautions

NOTES TO USERS OF ALUMINUM ELECTROLYTIC CAPACITORS

Before using the products, please read the notes for proper use.

1. Operating environment

- Water, saltwater, oil or other electrically conductive liquid on a capacitor, or using a capacitor when it is damp with dew may cause a failure. Oil on the rubber seal or safety vent may cause a decline in airtightness. Do not use any capacitor in contact with liquid. Do not use capacitors that have been immersed in rainwater or other contaminated water.
- Do not use or leave a capacitor in areas where there is halide compound gas such as hydrogen sulfide, nitrous acid, sulfurous acid, chlorine and bromine, ammonia or other hazardous gas. The ingress of any of these gases into a capacitor may corrode it.
- Do not use or leave a capacitor in an area exposed to ozone, ultraviolet light or radiation.
- Powders (dust, etc.) that settle between terminals can absorb moisture and cause corrosion and tracking of the terminal. When there is conspicuous dust between terminals, stop the current, allow the capacitor to discharge and wipe the terminals with paper or a towel lightly dampened with water or ethanol. Do not use cleaning agents or other chemicals.
- Do not use a capacitor in an area subject to excessive vibration or impact.

2. Operating conditions

2.1. Operating temperature, ripple current

- Check the operating and installation environment and use the capacitor within the range of the rated performance specified in the catalog or specifications.
- Maintain operating temperature and ripple current within the specified ranges. Base your choice of capacitors on the maximum load conditions. A capacitor will overheat under excessive current, potentially resulting in short circuit, fire or other major failure.
- A capacitor also generates the self-heating. Please bear in mind that the capacitor heats up the interior of the equipment and take appropriate precautions. Operate the unit under normal conditions and check the temperature of the area surrounding the capacitor.
- The permissible ripple current declines with the rise in ambient temperature (the temperature of the capacitor's surroundings). Consider the permissible ripple current at the maximum predictable ambient temperature.
- Electric characteristics change as frequencies change. Check frequency changes in order to choose the right capacitor.

2.2. Applied voltage and other operating conditions

- In general, capacitors have polarity. Applying reverse voltage or AC voltage to a capacitor may activate the vent or cause a short circuit, fire or other major failure.
- Use a bipolar capacitor for circuits whose polarity reverses. However, as in any other case, do not use a bipolar capacitor in an AC circuit. Use a special AC capacitor for AC voltage.
- Do not apply voltage in excess of the rated voltage. When an AC voltage is superimposed on DC voltage, prevent the peak value from exceeding the rated voltage. Excessive voltage may cause a short circuit, fire or other major failure.
- Specifications on surge voltage have restricted conditions and therefore do not guarantee long hours of operation. Voltage should never exceed the rated voltage of the capacitor, even for brief periods. Choose your capacitor accordingly.
- When connecting more than one capacitor in parallel, give proper consideration to the resistance of the wiring. Establish the connections so that the wiring resistance will be equal at every capacitor.
- When connecting more than one capacitor in series, all must be of identical rating, then the balancing resistors connected in parallel. At that time, design the circuit so that equal voltage levels are applied to all the capacitors. Ascertain that the voltage applied to each individual capacitor does not exceed its rated voltage.
- The balancing resistors are connected in parallel to each capacitor and do all have an equivalent value of resistance apart from their technical conditioned tolerance.
- The worst circumstance is given if the capacitor with the highest leakage current is applied to the most negatively tolerance attributed balancing resistor.
- Concerning the rating of balancing resistors the following points are essential:
  - number of series connected capacitors
  - Ratio of rated voltage of capacitors to bus voltage (voltage over C-battery)
  - Minimum leakage current of capacitors
  - Maximum leakage current of capacitors

- Tolerance of balancing resistors
- To use preferably high-resistance resistors, which cause smaller power losses, their tolerance has to be small (≤ 3 %).
- Due to the minimum leakage current of AIC tech Inc. capacitors this is defined for the series connection of two capacitors while the voltage derating is ≥ 5 %:

	V_r ≤ 450 VDC		V_r > 450 VDC	
T_a	C ≤ 8200 µF	C > 8200 µF	C ≤ 5600 µF	C > 5600 µF
< 40 °C	R = 82 kΩ	R = 68 kΩ	R = 68 kΩ	R = 47 kΩ
40 °C – 70 °C	R = 68 kΩ	R = 47 kΩ	R = 47 kΩ	R = 47 kΩ
> 70 °C	R = 47 kΩ	R = 47 kΩ	R = 47 kΩ	R = 27 kΩ

- Take into account the service life of the equipment in the use of the capacitor. Use of the capacitor beyond its service life risks such failures as safety vent activation or short circuit. Replace as necessary at regular inspection.
- Do not use a capacitor for a circuit that is quickly charged and discharged repeatedly. Use a dedicated capacitor for an application like a welding unit or photo flash charging/discharging. Consult us for selecting the proper capacitor, since the control circuits of certain rotation equipment, like servo motors, charge and discharge repeatedly.
- Even slow charging/discharging can shorten the service life of a capacitor, resulting in premature failure, where there are marked changes in voltage. Check the installation in your equipment carefully and consult us.
- General purpose capacitors should not be used for a circuit involving rapid charge and discharge or an AC circuit. Capacitors specially made for such applications should be used. Check the self-heating of the capacitor used in such a circuit in addition to the types and levels to be imposed to the capacitor of the rapid charge/discharge, rush current and voltage.

3. Installation

3.1. Before installation

- Check the specifications of the capacitors and install them within the prescribed specifications.
- Do not reverse the polarity. Do not use a capacitor where reverse voltage is applied, even if it appears problemfree. Not taking these precautions could lead to a major failure.
- Dropping or otherwise impacting a capacitor may result in a decline in its electric performance, causing a failure. Do not use any capacitor whose packaging has a noticeable abnormality on delivery.
- Do not distort the shape of the capacitor, which may lead the major failures such as liquid leakage or short circuit.

3.2. Installation method

- Do not install wiring or a circuit pattern near the vent. When the vent is activated, electrolyte may spurt out resulting in short circuit followed by fire or other secondary hazard due to tracking or migration.
- Do not lay out heat-generating components near the capacitor. Radiated heat and other partially high temperatures may shorten the life of the capacitor. PCB temperature that is higher than the internal temperatures of the capacitor markedly hinders the dissipation of heat inside the capacitor, greatly shortening its life. When designing equipment, check temperature distribution first.
- When installing the vent of the capacitor against the PCB, drill a gas bleeder hole to allow the gas to escape when the vent is activated. If the diffusion of gas is hindered while the vent is in operation, the internal pressure can rise, with danger of explosion, fire or other serious failure.

Capacitor diameter	Clearance
Ø 16 ~ 35	3 mm or more
Ø 40 or more	5 mm or more

3.2.1. Snap mount type capacitors

- Do not connect the blank terminal (reinforced terminal) of multi-terminal (3-, 4-) snap mount capacitors, as this could cause a short circuit.
- Use a completely isolated circuit between the case and the electrode terminal, and between the case and the circuit pattern.
- Do not hinder the activation of the vent. Allow for the following clearance above the vent. If dissipation of gas is inhibited while the vent is in operation, the inner pressure will rise, with danger of explosion, fire or other major failure.

- Solder at 260 °C for not more than 10 seconds (in the case of dip) or at 380 °C for not more than 3 seconds (in the case of tip of iron). Exceeding these specifications may result in a decline in electrical performance, leading to trouble. Do not let the tip of the soldering iron come in contact with the capacitor body.
- If it becomes necessary to remove a capacitor after soldering, melt the solder with a soldering iron to avoid subjecting the terminals to stress.
- Flux on the rubber seal may result in corrosion. Do not flux stick to any part other than the terminals.

3.2.2. Screw-terminal type capacitors

- Following mounting positions are recommended for screw type capacitors:
  - upright (vertical), terminals side face upwards
  - on the side (horizontal), anode above cathode terminal
  - on the side (horizontal), vent faces upwards
- The upside-down position (terminals face downwards) should not be used. If a capacitor is installed sideways, please put anode terminal or vent upward.
- Screw type capacitors with stud bolt mounting must be fixed insulated.
- Please refer to "Tightening torques for terminals and mounting options" for further notes.
- If a terminal screw is loose or angled, that portion generates heat, with a danger of fire or other serious failure. Check that the screw is inserted on the perpendicular and securely tightened.
- We recommend a bar hole diameter of 6mm for M5 terminals. An excessively large hole diameter may result in poor contact between the terminal surface and the bar, causing local heat buildup, with a danger of fire or other serious failure.
- Do not apply physical stress (tightening with fixtures, etc.) to the curled portion (seal contacting the case and cap). Any such practice may cause a liquid leak or sleeve breakage.

4. About washing PCB and fixative

- In washing, please avoid using a material which destroys the ozone layer.
- For cleaning flux, we recommend an aqueous or higher alcohol detergent or isopropyl alcohol. The recommended concentration of flux with regard to the cleaning agent is 2wt% or less. Excessively high flux concentration may cause corrosion due to halide. For use of other cleaning agents, consult us.
- If you must clean the capacitor with halogen solvents, etc., we recommend that you use washable capacitors. Make sure that the cleaning conditions are within those stipulated in the specifications, and measure the cleaning agent for conductivity, pH, specific gravity and moisture content for contamination control. After cleaning, thoroughly dry the capacitors together with PCBs. Do not store the capacitors in the same atmosphere as the cleaning agent or in a sealed container. For details on washable capacitors, consult us.
- Thoroughly remove all traces of the cleaning agent from the capacitor. Even when not cleaning the flux, dry the flux itself. Cleaning agent or flux residue may cause the halide to penetrate the rubber seal, leading to corrosion.
- When fixing a PCB and capacitor with a coating agent or fixative, use a substance completely free of halide compounds. Thoroughly dry the flux or detergent before applying the coating. Do not let the coating block the entire surface of the seal. Any halide compound present in the coating may lead to corrosion.

5. Storage

- Store all capacitors indoors at a temperature of 5 – 35 °C (primarily below 25 °C) and relative humidity of not more than 75 % RH (25 °C), away from direct sunlight. Store capacitors in their original packaging whenever possible.
- The base shelf life of capacitors is 3 years. The useful shelf life of capacitors is 5 years under proper storing conditions.
- Capacitors which have been on the shelf for more than 3 – 5 years may have high leakage current. Treat them with appropriate voltage before using. As treating method, we recommend the past forming process as below at room temperature:
  1. Firstly, 80 % of rated voltage applied and keep 1 hour after reaching 80 % of rated voltage.
  2. Secondarily, 90 % of rated voltage applied and keep 1 hour after reaching 90 % of rated voltage.
  3. Finally, 100 % of rated voltage applied and keep 1 hour after reaching 100 % of rated voltage.
- Even after discharged, capacitors may hold an electrical charge due to re-striking. Do not touch the terminals with bare hands. Touching the terminals could cause an electric shock. Discharge all capacitors with a resistor (approx. 1kΩ) or a discharge plate before use.

6. About fumigation

- To control insects during export, fumigation may be done using halide compounds such as methyl bromide. Direct fumigation of capacitors or equipment incorporating capacitors or use of fumigated timber as a pallet may cause corrosion inside a capacitor, resulting in failure. Even when covered in plastic, chemicals may penetrate through small gaps. Likewise, do not apply insecticides directly on or near the capacitors.
- When using a sterilizer against infectious diseases, do not spray it directly on or close to capacitors and equipment incorporating capacitors. Some sterilizers contain a high concentration of halide compounds. The sterilizer spray may accelerate internal corrosion, resulting in failure.

7. Miscellaneous

7.1. Maintenance and servicing

- Conduct periodic checkups on capacitors for industrial equipment. Before each periodic checkup, turn off the equipment and completely discharge the capacitor. Follow these checkpoints:
  1. Appearance: condition of the vent (open, notably swollen), liquid leaks or other considerable abnormality.
  2. Electrical performance: capacity, tangent of loss angle, leakage current, and other items specified in the delivery specifications.
     The standard temperature for measuring electrical performance is 20 °C. Leave the capacitor at 20 °C and wait for the inside of the capacitor to reach the specified temperature before taking measurements.
- Please ask us the advisability of using capacitor which is inspected.
- Replace all capacitors whose service life has reached its end. When replacing one capacitor, always replace all of them. Mixing old and new capacitors may cause an imbalance in the ripple current or voltage sharing, risking failures such as activation of the vent or short circuit.

7.2. In an emergency

- If gas is detected while a product is in use, turn off the main power supply or unplug it.
- When the safety vent of a capacitor is activated, a hot gas exceeding 100 °C will escape. Do not place your face in close proximity to the vent and avoid proximity to areas exposed to the gas.
- Should the gas jet get in your eyes, wash them immediately with clean water. If you inhale the gas, gargle immediately. The gas is composed of a gaseous form of hydrogen or organic solvents.
- Should the electrolyte come in contact with your skin, wash with soap and water. Never put it into your mouth.

7.3. For scrapping

- Scrapped capacitors are classified as scrapped metal. For disposal they are handled as controllable industrial waste because of the nature of the contents (electrolyte). Most of the material is aluminum and cannot be completely burned.

7.4. Remarks

- For details, see the Guidelines on the Operation of Fixed Aluminum Electrolytic Capacitors for Electronic Equipment EIAJ RCR-2367B March, 2002 issue.
- Specifications are subject to change without prior notice for product improvement.

8. Quality and useful life

- The specification of quality data – which always refers to a fairly large number of components – does not constitute a guarantee of characteristics or properties in the legal sense. However, agreement on the specifications does not mean that the customer may not claim for replacement of individual defective capacitors within the terms of delivery. We cannot, however, assume any further liability beyond the replacement of defective components. This applies in particular to any further consequences of component failure.
- Furthermore, it must be taken into consideration that the figures stated for useful life and failure rate refer to the average production status and are therefore to be understood as mean values (statistical expectations) for a large number of delivery lots of identical capacitors. These figures are based on application experience and data obtained from preceding tests under normal conditions, or for purposes of accelerated aging – more severe conditions.
- Glossary

V_r	Rated voltage	**T_a**	Ambient temperature	**Z**	Impedance
I_r	Ripple current	**ESR**	Equivalent Series Resistance	**DC**	Direct Current
I_L	Leakage current	**ESL**	Capacitor self-inductance	**RMS**	Root mean square (e.g. of ripple current)

All product, product specifications and data in this catalogue are subject to change without notice to improve reliability, function or design or for other reasons.

Notes

AIC EUROPE GmbH · Sales & technical support of AIC capacitors · Telefon: +49 (0)2151- 4943-5 · E-Mail: info@aic-europe.com · www.aic-europe.com

AIC EUROPE

Sales & technical support of AIC capacitors

AIC Europe GmbH

Adolf-Dembach-Straße 12
D-47829 Krefeld/Germany
E-Mail: info@aic-europe.com
Phone: +49 2151 4943-5
Fax: +49 2151 4943-80

www.aic-europe.com