2020

Catalog QEED

MASTER CHIPS
WE MAKE THINGS WORK FOR YOU •
Industrielaan 4 • 9320 Erembodegem • Belgium
T +32 (0)56 22 36 73 • www.masterchips.eu

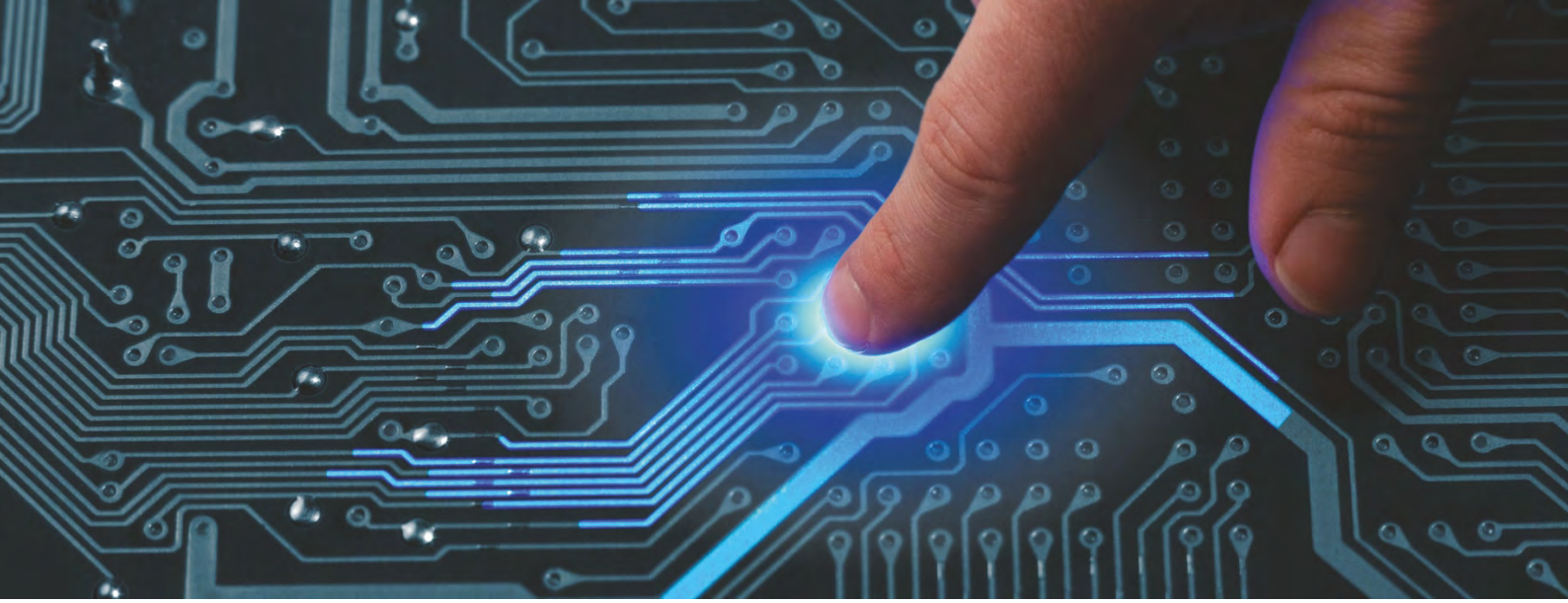

Catalog

Modules and Interfaces for Automation and IoT platform

QEED

QUALITY ELECTRONIC DESIGN

MADE IN ITALY

www.qeed.it

ARE YOU READY FOR THE IoT REVOLUTION?

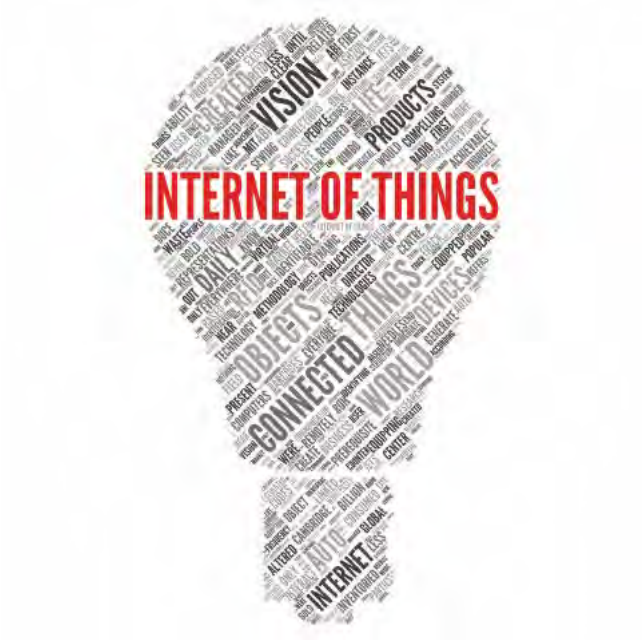

What is INNOVATION?
Great ideas, smart solutions

The IoT revolution is quickly changing the rules of the game.
Sharing a network data has become very easy and cheap. We can access data from our machines, homes, and facilities from our smartphone wherever we are.

We have thought and made interfaces that communicate directly with your IoT platform and we did it in the smartest way possible.

QEED make it all easier.

BE SMART
BE QEED

WHO WE ARE

THE DEM'S ELECTRONIC DEPARTMENT

QEED is a trademark owned by DEM S.p.A. and is a technical supplier of electronic solutions mainly dedicated to the world of industrial automation.
Present on the market since 2013, first as a sub-supplier of important industrial companies and finally with its own line of products, QEED has developed skills and know-how able to satisfy more application sectors, besides the reference one, such as the control of energy, electrical measurements and data management. Furthermore, by working closely with our customers, we provide them with our knowledge in the design and production of full custom electronic boards.
Always attentive to research and innovation, QEED also proposes itself as a partner for the development of IoT technologies for the network connection of devices and the consequent access to the Industry 4.0 Plan.

QEED is by your side anytime, anywhere.

Since 1987 **DEM** has been a market leader in the design and manufacture of filters for radio interference suppression (RFI) for household and similar appliances, through shared development, to achieve the best technical-commercial compromise. We reach this goal thanks to a close collaboration with our customers, of which we are partners and technological consultants before suppliers. We want to ensure the best service before, during and after the supply of our products, providing know-how, experience and technology.

We share with you the value of our work.

Look at our offer

A wide range of AC/DC Current Transformers and Converters:

- **AC/DC current transformers and hall effect** with analog and RS485 serial output
- **Current transformers** with secondary 5 A or 1 A
- **Flexible Rogowski probes** (also custom versions)
- **Split core current transformers** with secondary at 5 A and 333 mV
- **Universal current and voltage converter and analyzer**, with analog output and RS485

A complete offer for AC/DC power and energy measurement:

- **AC/DC hall's effect power meters**, single phase, for Voltage up to 800 VAC/1000 VDC.
  Output: RS485
- **Three phase power meter** with external CTs or passing CTs with RS485 output or relays output
- **MID approval single and three phase power meters** with RS485 output
- **Single and three phase power meter,** 17,5 mm of width, universal input for current transformers, RS485 output
- and alarm contact

I/O Modules, TCP-IP Bridge, Signal Converters with advanced features

- **Isolated signal converters** for Universal input, with DATALOGGER, SPDT contact and RS485.
- **Isolated serial converters and repeater** USB-RS485/ ETHERNET-RS485.

CURRENT TRANSFORMERS AND CURRENT PROBES

QI SERIES

QEED offer several solutions to cover your needs for current measurement:

- current Transformers with secondary at 1 A / 5 A;
- split core current transformers with secondary at 5 A;
- flexible Rogowski probes;
- hall's effect AC/DC current transformers with analog output and RS485 Modbus integrated;
- split Core Current Transformers with secondary at 333 mV;
- universal current / voltage converter with analog output, alarm contact and RS485 Modbus RTU.

QI-50-I / QI-50-V-485 or QI-300-I / QI-300-V-485	
	QI-50-I / QI-300-I Loop powered (4-20 mA). **QI-300-I / QI-300-V-485** Analog output 0...10 V and RS485.
QI-xxx/5 or QI-xxx/1	
	With secondary at 1 A or 5 A. Range from 50 A to 5000 A.
QI-SC / QI-KCT	
	QI-SC-xx-xxx/5 Split core with secondary at 5 A with integrated cable. Range from 100 A to 1000 A. **QI-KCT-xx-xxx/333.** Available with secondary at 333 mV.
QI-ROG	
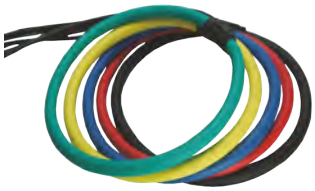	Flexible Rogowski probes. Output 100 mV @ 1000 A. Available with different lenght.
QE-CURRENT-485	
	Universal current /voltage converter and analyzer. Analog output, digital output, RS485 Modbus. Current probes reader.

HALL'S EFFECT AC/DC CURRENT TRANSFORMERS (QI-50-I / QI-300-I / QI-50-V-485 / QI-300-V-485)

QI SERIES

Compliant to the CE standards:
CEI EN 61000-6-4/2006+A1 2011;
EN 64000-6-2005;
EN 61010-1/2010

MADE IN ITALY

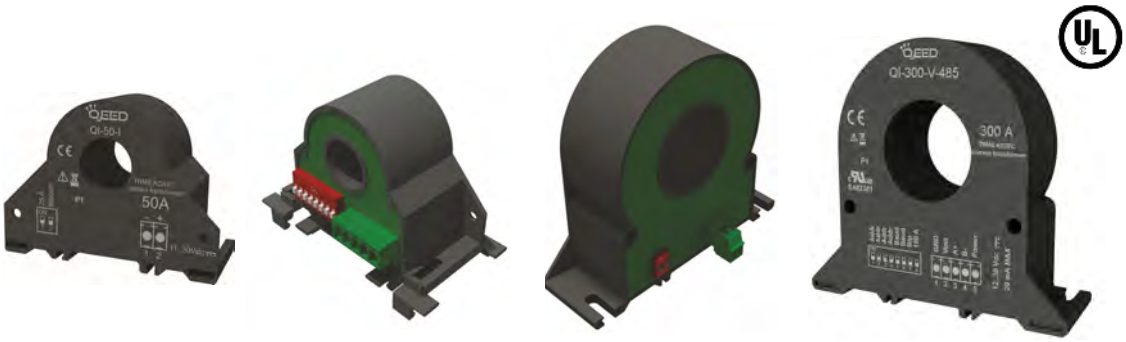

	QI-50-I	QI-50-V-485	QI-300-I	QI-300-V-485
MEASUREMENT RANGE	50 A AC/DC		300 A AC/DC	
POWER SUPPLY	from loop	12...30 Vdc	from loop	12...30 Vdc
ACCURACY OF F.S.	0,5%			
MEASUREMENT TYPE	RMS (monopolar) or DC			
OUTPUT	4-20 mA	0...10 V e RS485	4-20 mA	0...10 V e RS485
ELECTRICAL FEATURES:				
ABSORPTION	Less then 3,5 mA	20 mA max	Less then 3,5 mA	20 mA max
RESOLUTION	12 bit			
WORKING TEMPERATURE	-15 °C...+65 °C			
STORAGE TEMPERATURE	-40 °C...+85 °C			
TEMPERATURE COEFFICIENT	< 200 ppm/°C			
HUMIDITY	10...90% not condensing			
BAND WIDTH	DC or da 20...2000 Hz			
CREST FACTOR	2		1,4	
OVERLOAD	2000 A pulsed / 300 A continuos		2000 A pulsed / 500 A continuos	
ISOLATION	3 kV on bare wire			
HYSTERESIS	0,2%		0,2%	
RESPONSE TIME	1000 ms	1000 ms on analog 30 ms on RS485	1000 ms	1000 ms on analog 30 ms on RS485
PROTECTION INDEX	IP20			
MECHANICAL FEATURES:				
DIMENSION	46,1 x 63 x 26,4 mm (terminal excluded)		89,1 x 99,25 x 28,5 mm (terminal excluded)	
WEIGHT	72 g		370 g	
FILLING	Epoxy resin			
TERMINALS	n°1 removable, 2-way, pitch 5,08 mm	n°1 removable, 5-way, pitch 3,5 mm	n°1 removable, 2-way, pitch 5,08 mm	n°1 removable, 5-way, pitch 3,5 mm
DIP-SWITCH	2-way	8-way	2-way	8-way
LED	n°1 yellow, fixed power on	n°1 yellow, fixed power on, blinking in communication	n°1 yellow, fixed power on	n°1 yellow, fixed power on, blinking in communication
ENCLOSURE	Nylon vitrified V0			
MOUNTING	Ready to be mounted on din rail, vertical or horizontal by plastic braket (included)			

MEASURE AVAILABLE:

	QI-50-I	QI-50-V-485	QI-300-I	QI-300-V-485
ANALOG OUTPUT	RMS or DC current	RMS or DC current	RMS or DC current	RMS or DC current
SERIAL OUTPUT RS485 Modbus		min/Max Current		min/Max Current
		Ah		Ah
		RMS or DC Current (Float / Swapped / Hundredths)		RMS or DC Current (Float / Swapped / Hundredths)

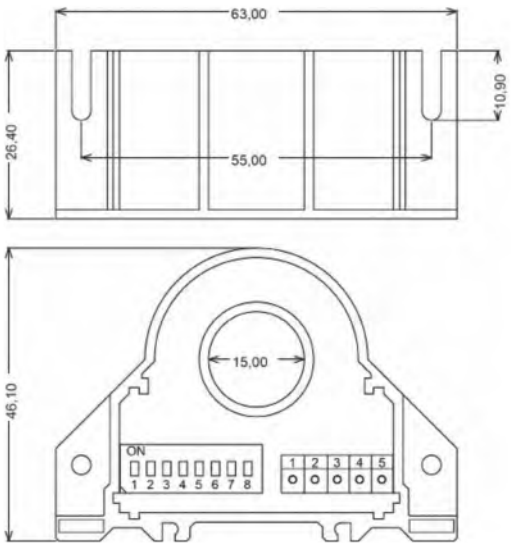

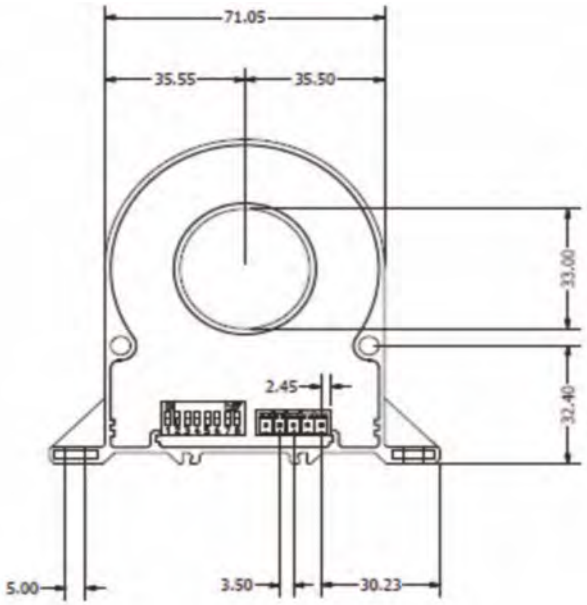

CONFIGURABLE PARAMETERS:

	QI-50-I	QI-50-V-485	QI-300-I	QI-300-V-485
VIA DIP-SWITCH	Monopolar or Bipolar	Monopolar or Bipolar	Monopolar or Bipolar	Monopolar or Bipolar
	Span 25 A or 50 A	Span 25 A or 50 A	Span 150 A or 300 A	Span 150 A or 300 A
		Modbus address: 1...15		Modbus address: 1...15
		Baudrate: 2400...58600		Baudrate: 2400...58600
VIA SOFTWARE FACILE OR RS485		Zero and Span for Current input		Zero and Span for Current input
		Zero and Span for Analog output		Zero and Span for Analog output
		Modbus address		Modbus address
		Baudrate: 2400...115200		Baudrate: 2400...115200
		Measurement Filter		Measurement Filter
		Cut off on current measurement		Cut off on current measurement
		Delay answer setting		Delay answer setting

CURRENT TRANSFORMERS SECONDARY 5 A

Class 0,5/1

QI-xxx/5-x

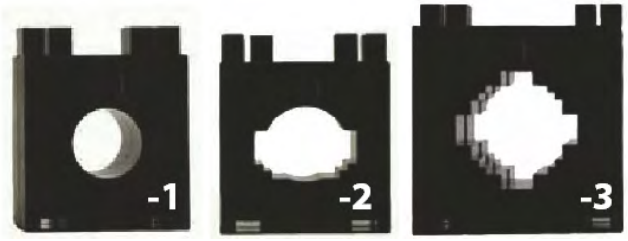

20 mm **23 mm** **30 mm**

Ready to be mounted on DIN rail

TECHNICAL FEATURES	
ENCLOSURE	ABS Self-extinguishing case
CURRENT TO THE SECONDARY	**5 A** (other on request)
WORKING FREQUENCY	40-60 Hz
DYNAMIC NOMINAL CURRENT OF SHORT CIRCUIT (Idin)	2,5 Iter per 1 sec - Max peak value that the CT can bear having the secondary in short circuit
THERMAL NOMINAL CURRENT OF SHORT CIRCUIT (Iter)	40-80 Ipn per 1 sec - Max effective value with secondary in short circuit
STANDING OVERCURRENT	1,2 In
VOLTAGE INSULATING REFERENCE	0,72 kV maximum voltage value
SAFETY VALUE	3 kV @ 50 Hz per 1 min, max voltage value, between primary and secondary
CREST FACTOR	N ≤ 5 Saturation Factor (Sf) or ratio between primary current value (that cause the magnetic core saturation), and the nominal current value. The lower is the N value the higher is the instrument protection
WORKING TEMPERATURE	-25 °C...+50 °C
STORAGE TEMPERATURE	-40 °C...+80 °C
MAXIMUM CABLE TEMPERATURE	70 °C
RELATIVE HUMIDITY	90% max, not condensing
INSULATION	On air, E class
PROTECTION INDEX	IP30
STANDARDS	Compliant to the CEI 38-1, IEC 185, VDE 0414, EN60044-1, EN60044-1A

FLEXIBLE ROGOWSKI PROBE

QI-ROG-xxx

QI-ROG-300
QI-ROG-400

Other lenght on request

TECHNICAL FEATURES	
TRANSDUCER O.D. (coil cross section)	12 mm
TRANSDUCER LENGHT	300 or 400 mm (other on request)
CAP COUPLING O.D.	17 mm (max)
MAX DIAMETER OF CONDUCTOR OR BUS BAR	QI-ROG-300: 84 mm QI-ROG-400: 115 mm
MATERIALS	Transducer & Cable: thermoplastic rubber, flame retardant UL94 V0 rated

ENVIROMENTAL CONDITIONS	
WORKING TEMPERATURE	-20°C...+70 °C
RELATIVE HUMIDITY	85% max without condensation
POLLUTION DEGREE	2
MAXIMUM ALTITUDE	2000 m

ELECTRICAL DATA	
MAXIMUM MEASURABLE CURRENT	**100 kA @ 50 Hz**
ACCURACY	± 1%
LINEARITY	± 0,2%
OUTPUT SIGNAL	**100 mV / 1000 A @ 50 Hz**
FREQUENCY RANGE	20 Hz… 5 kHz

POSITION SENSIVITY	
CONDUCTOR	± 2% maximum on closing unit
EXT. FIELD INFLUENCE	± 0,5% maximum
TEMPERATURE SENSIVITY	± 0,07% per °C

SAFETY	
MAX WORKING VOLTAGE	1000 V @ 50/60 Hz (CAT III)
HI POT TEST (Transducer & Output Cable)	7400 Vac @ 50/60 Hz for a minute

QI-SC

	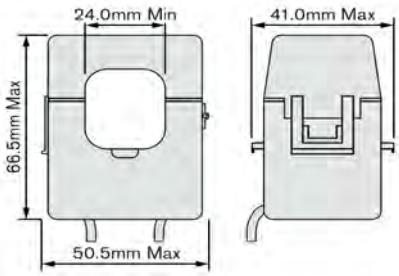	Split core current transformer with secondary at 5 A, 1 m of integrated cable, class 1, diameter 24 mm. Available for 100 A, 200 A and 300 A. **QI-SC-24-100/5** **QI-SC-24-200/5** **QI-SC-24-300/5**
	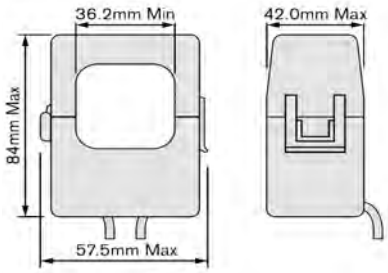	Split core current transformer with secondary at 5 A, 1 m of integrated cable, class 1, diameter 36 mm. Available for 300 A, 400 A and 600 A. **QI-SC-36-300/5** **QI-SC-36-400/5** **QI-SC-36-600/5**

QI-KCT

	Split core current transformers with secondary at 0...333 mV, 1 m of integrated cable, available with different diameter hole: 6 mm, 10 mm, 16 mm, 24 mm and 36 mm for measurement up to 600 A. **QI-KCT-06-xx/333 (primary 5 A)** **QI-KCT-10-xx/333 (primary 30 A, 50 A o 80 A)** **QI-KCT-16-xxx/333 (primary 80 A, 100 A o 200 A)** **QI-KCT-24-xxx/333 (primary 100 A, 200 A o 300 A)** **QI-KCT-36-xxx/333 (primary 300 A, 400 A o 600 A)**

QI-SC-DBP

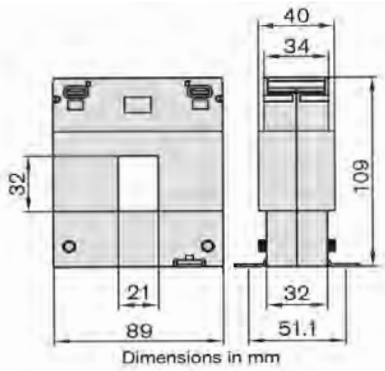

Split core current transformer with secondary at 5 A, class 1, hole 20 x 30 mm.
Available for 100 A, 200 A, 300 A and 400 A.

QI-SC-DBP23-100/5
QI-SC-DBP23-200/5
QI-SC-DBP23-300/5
QI-SC-DBP23-400/5

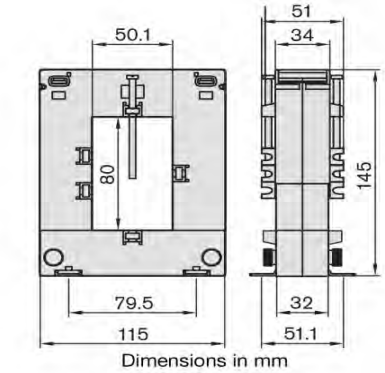

Split core current transformer with secondary at 5 A, class 1, hole 50 x 80 mm.
Available for 300 A, 400 A, 600 A, 800 A and 1000 A.

QI-SC-DBP58-300/5
QI-SC-DBP58-400/5
QI-SC-DBP58-600/5
QI-SC-DBP58-800/5
QI-SC-DBP58-1000/5

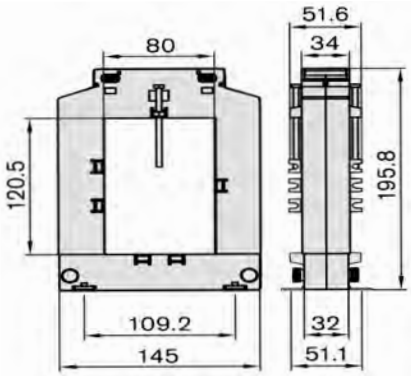

Split core current transformer with secondary at 5 A, class 1, hole 80 x 120 mm.
Available for 800 A, 1000 A, 1500 A and 2000 A.

QI-SC-DBP812-800/5
QI-SC-DBP812-1000/5
QI-SC-DBP812-1500/5
QI-SC-DBP812-2000/5
Available version 2000 A with hole: 80 x 160 mm
(**QI-SC-DBP816-2000/5**)

QI-DP

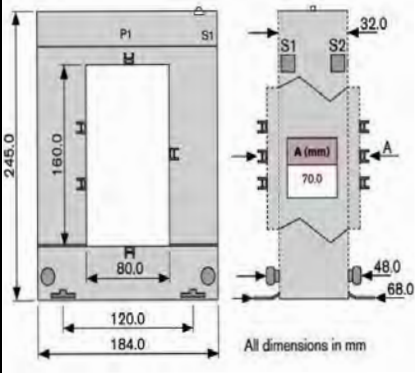

Available version 2000 A of split core current transformer with secondary at 5 A, class 1.
Hole 80 x 160 mm with rectangular shape.
(**QI-DP-816-2000/5**)

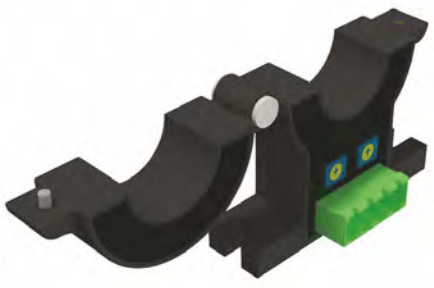

The QI-HSC sensor allows the measurement of continuous and alternating currents with excellent accuracy and a wide measuring range.

The QI-HSC, which is openable, allows you to implement without disconnecting the conductors.

Removable screw terminals are very easy to install.

The HSC sensors are used in all measurement requirements of continuous currents and with variable frequency (up to 20 kHz), in battery control systems such as UPS, safety power supplies and energy storage), power electronics. The output signals can be connected to a special instrumentation, PLC, etc.

	QI-HSC-50	QI-HSC-100
NOMINAL CURRENT MEASUREMENT	50 A AC/DC	100 A AC/DC
AUXILIARY POWER SUPPLY	± 12 … 15 Vdc	
WORKING FREQUENCY	From DC up to 20 kHz	
LOAD RESISTANCE	min 10 kΩ	
ABSORPTION @ 15 VDC	25 mA	
VOLTAGE OUTPUT @ Nominal current Ip = 0	± 25 mV	
VOLTAGE OUTPUT @ Nominal current Ipn	± 4 V ±1%	
ACCURACY	± 1%	
LINEARITY	< 1%	
THERMAL DRIFT	± 1 mV / °C	
RESPONSE TIME 0...90%	10 µs	
ISOLATION PRIMARY/SECONDARY	3 kV	
WORKING TEMPERATURE	-25 °C...85 °C	
STORAGE TEMPERATURE	-40 °C...100 °C	
CONNECTION	Removable connector for cable section 0,2 ÷ 2,5 mm²	
WEIGHT	80 g	

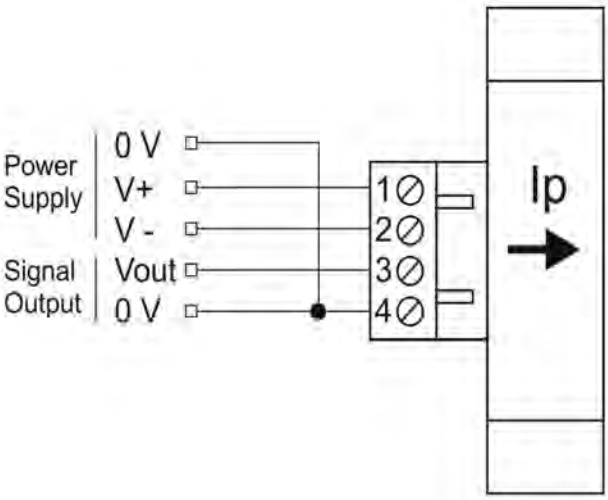

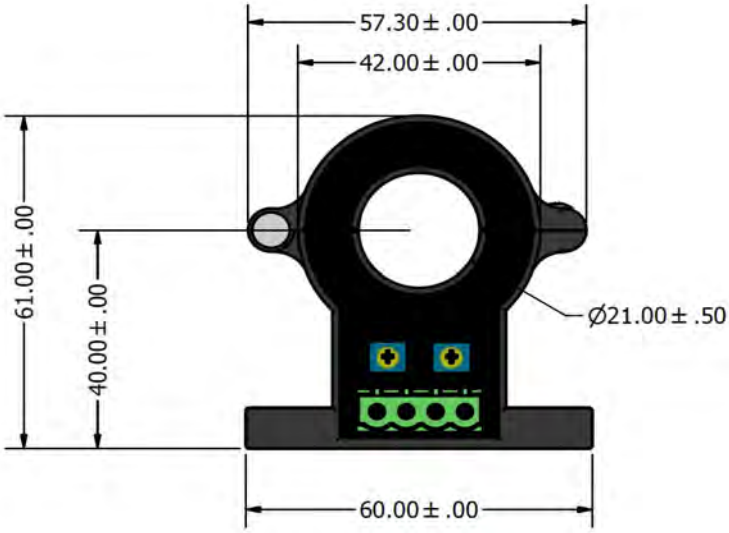

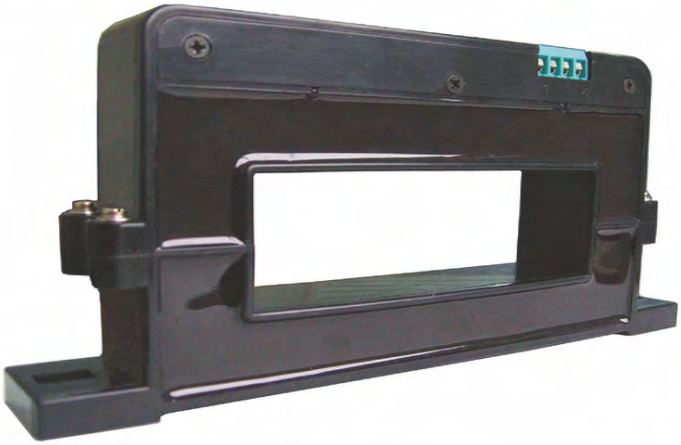

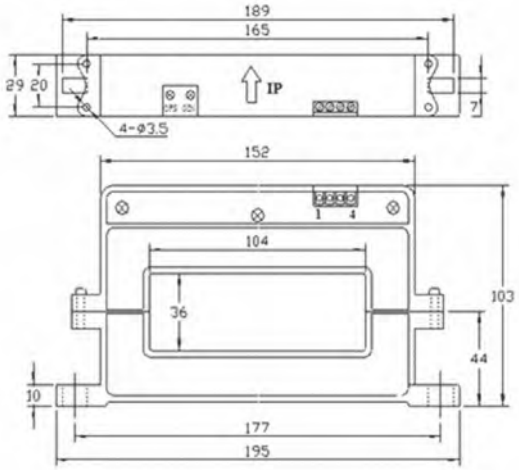

The QI-HSC-104-2000-I allow the measurement of continuous currents or with a wide frequency range. **Equipped with 4 ÷ 20 mA output**. They use the open loop Hall effect measurement technique (via openable core), making the sensors easily installable without disconnecting the conductors. Screw terminal blocks make installation extremely easy.

	QI-HSC-104-2000-I
NOMINAL CURRENT MEASUREMENT	± 2000 A
AUXILIARY POWER SUPPLY	24 Vdc
WORKING FREQUENCY	da DC fino a 20 kHz
LOAD RESISTANCE	max 500 Ω
ABSORPTION @ 24 VDC	25 mA
CURRENT OUTPUT @ Nominal current Ip = 0	4 mA
CURRENT OUTPUT @ Nominal current Ipn	20 mA ±1%
ACCURACY	± 1%
LINEARITY	< 1%
MAXIMUM PERMANENT OVERLOAD	50%
THERMAL DRIFT	± 0,001 mA / °C
RESPONSE TIME 0...90%	50 ms
INSULATION VOLTAGE BETWEEN PRIMARY/SECONDARY	5 kV
WORKING TEMPERATURE	-40 °C...85 °C
STORAGE TEMPERATURE	-40 °C...125 °C
CONNECTION	Removable connector for cable section 0,2 ÷ 2,5 mm²
WEIGHT	960 g

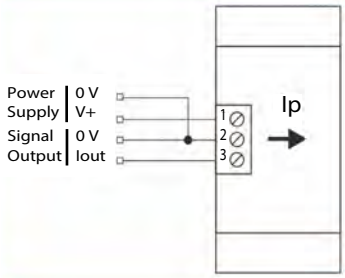

Legend:	
Ip	Primary current
Ipn	Nominal primary current
0 V	Reference for measurement and power supply
V+	Positive auxiliary power +24 Vdc
Iout	Output 4÷20 mA

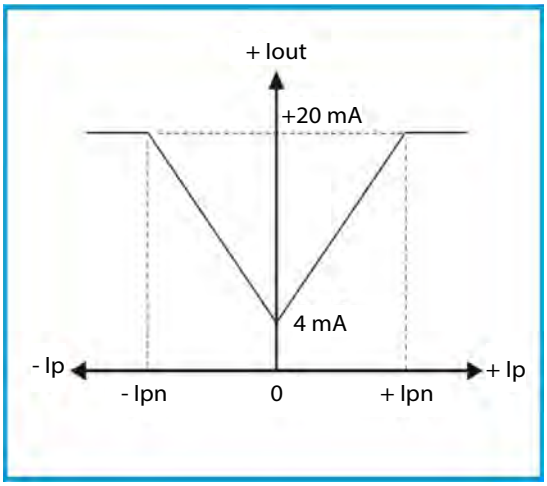

UNIVERSAL CURRENT / VOLTAGE CONVERTER AND ANALIZER

QE-CURRENT-485

The **QE-CURRENT-485** is the first **ALL IN ONE UNIVERSAL CURRENT AND VOLTAGE CONVERTER AND ANALYZER** of the market.
It is able to interface with any primary current sensor or voltage transformer isolated.
Enclosure of just a DIN, ideal for distribution panels.
It's equipped with Analog Output and RS485 Modbus RTU for reading all the parameters. Configuration using free software. The module provides the dual power supply for Hall sensor.

	QE-CURRENT-485	QE-CURRENT-485-H
CURRENT / VOLTAGE INPUT	1	
CURRENT / VOLTAGE PROBES SUPPORTED	• ROGOWSKI probe; • CURRENT TRANSFORMER with secondary at 1A / 5A; • CURRENT / VOLTAGE TRANSFORMER with secondary at ±1 V pk o ± 10 V pk; • CURRENT TRANSFORMER with secondary at 100 mVAC/dc; • HALL'S EFFECT SENSOR, with its Power Supply (±15 Vdc).	
TEMPERATURE INPUT	1	
TEMPERATURE PROBES SUPPORTED	PT100 2-3 wires or NTC (10 kΩ / 100 kΩ or custom) NOT ISOLATED	
OUTPUT	• RS485 MODBUS RTU • 0...10 V / 0...20 mA (fully configurable by software) • Free contact (alarm) 50 mA max, 30 Vdc	
AVAILABLE MEASUREMENT (for voltage too)	I RMS, Idc, Iac	
	I RMS max, I RMS min, I RMS media	
	Idc max, Idc min, Idc media	
	Iac max, Iac min, Iac media	
	Ah on I RMS, Ah on Idc, Ah on Iac	
	Frequency	
	Crest Factor	
	Temperature	
	Resistence	
		I pk
		THD
		Harmonics analysis up to 63th
		Internal temperature measurement
SAMPLING RATE	6400 Hz @ 50 Hz	
THERMAL DRIFT	< 100 ppm/°C	
ACCURACY ON ANALOG OUTPUT	< 0,1% F.S.	
BAUDRATE	from 1200...115200 Baud (standard 9600)	

UNIVERSAL CURRENT / VOLTAGE CONVERTER AND ANALIZER

QE-CURRENT-485

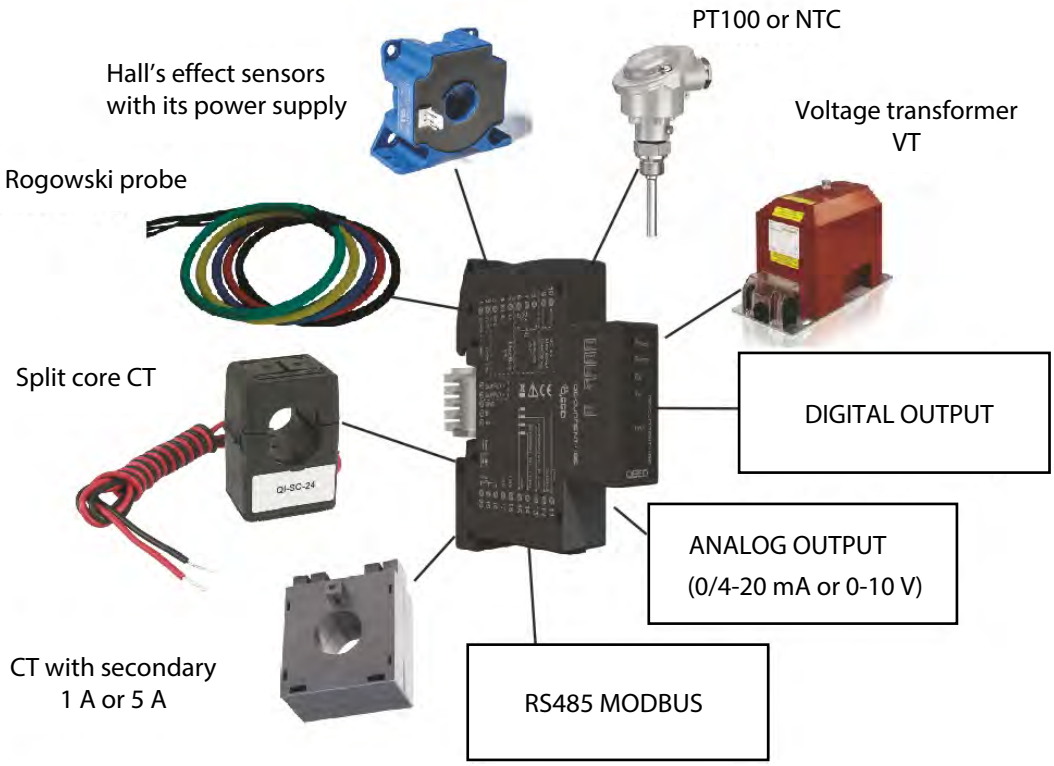

The QE-CURRENT-485 is fully configurable via RS485 by the free software FACILE QE-CURRENT-485 (download it from www.qeed.it site) or directly via Modbus commands.
Through the T-BUS connector (optional) it is possible to bring the power supply and connect multiple RS485 devices without cables.

WATER INDUSTRIES

PF CORRECTIONS

STEEL MILLS

PAPER MILLS

ELECTRIC POWER DISTRIBUTION SYSTEM

ELECTRIC MOTORS

OTHER FEATURES	QE-CURRENT-485 / QE-CURRENT-485-H
WORKING TEMPERATURE	-10 °C...+60 °C
STOCK TEMPERATURE	-40 °C...+85 °C
RELATIVE HUMIDITY	10... 90% not condensing
ALTITUDE	Up to 2000 m s.l.m.
FIXING SYSTEM	On DIN rail , ready to be mounted on T-BUS system
CONNECTIONS	n°2 removable connectors of 10-way 3,5 mm step
DIMENSIONS	93 x 17,5 x 68,3 mm (without connectors)
WEIGHT	55 g
ENCLOSURE	PBT, grey
DIP-SWITCH	2-way (Baudrate and Address) for connection with the configuration software FACILE
LED	N°5 : Power (Green), COMM (Yellow), TX e RX (Red), Digital contact (Green)
STANDARD REFERENCES	EN 61000-6-3; EN 61000-4-2; EN 61000-4-3; EN 61000-4-4; EN 61000-4-5; EN 61000-4-6; EN 61010-1

ACCURACY	QE-CURRENT-485 / QE-CURRENT-485-H
CHANNEL 1/5 A	Crest factor: 4 (@ 5 A) Range 50 mA < I < 250 mA: maximum error 1% Range 250 mA < I < 5 A: maximum error 0,5% Temperature coefficient: < 100 ppm/°C Banda Width: > 2 kHz
CHANNEL 20/100 mA	Crest factor: 4 (@ 100 mA) Range 1 mA < I < 5 mA: maximum error 1% Range 5 mA < I < 100 mA: maximum error 0,5% Temperature coefficient: < 100 ppm/°C Banda Width: > 2 kHz
CHANNEL ± 1 Vpk	Range 10 mV< V < 50 mV: maximum error 1% Range 50 mV< V < 1 V: maximum error 0,5% Temperature coefficient: < 100 ppm/°C Banda width: > 2 kHz
CHANNEL ± 10 Vpk	Range 100 mV < V < 500 mV: maximum error 1% Range 500 mV < V < 10 V: maximum error 0,5% Temperature coefficient: < 100 ppm/°C Banda width: > 800 Hz

TEMPERATURE CHANNEL

PT100	Range: -200 °C...600 °C Error: ± 1,2 °C on the reading Temperature coefficient: < 100 ppm/°C
NTC	Range 200 Ω...20 kΩ: ± 1,2 °C on the reading Range 20 kΩ...300 kΩ: ± 1,6 °C on the reading Temperature coefficient: < 100 ppm/°C

MADE IN ITALY CE

Standard reference:
CE EN 61000-6-4/2006+A1 2011;
EN 64000-6-2005;
EN 61010-1/2010.

SINGLE AND THREE PHASE POWER METER

QEED offer several solution to cover your needs for Power and Energy measurement:

- **AC/DC Single Phase POWER METER** developed in a CT enclosure with RS485 Modbus output;
- **AC/DC Single Phase POWER METER for direct connection** or with external CT, with Analog and Digital output, datalogger via USB and RS485 Modbus;
- **Single phase AC POWER METER with direct connection**, display and RS485 Modbus
- **Three phase POWER METER for external CTs or passing CTs, with RS485 Modbus;**
- **Three phase POWER METER/ NETWORK ANALYZER** in only ONE DIN width, RS485;
- **Bidirectional Three phase POWER METER** - 3 DIN width, with RS485 Modbus
- Panel meter 96 x 96 mm, with Harmonics analysis, THD and RS485 Modbus
- **MID APPROVAL Single and Three phase Power meter with RS485 Modbus (in partnership with INEPRO).**

SERIE QI-POWER	
	QI-POWER-485 / QI-POWER-485-LV Single phase measurement for AC/DC Current up to 50 A and Voltage up to 800 VAC / 1000 VDC or 80 VAC / 100 VDC for -LV (low voltage) version. **QI-POWER-485-100 / QI-POWER-485-100-LV** Phase measurement for current up to 100 A and Voltage up to 800 VAC / 1000 VDC or 80 VAC / 100 VDC for -LV (low voltage). **QI-POWER-485-300 / QI-POWER-485-300-LV** Phase measurement for current up to 300 A and Voltage up to 800 VAC / 1000 VDC or 80 VAC / 100 VDC for -LV (low voltage).
QC-POWER-T-485 / QC-POWER-T-TA	
	For three-phase measurements with external CTs with secondary 5 A or passing Cts up to 90 A, RS485 serial output.
QC-POWER-T-RELE	
	For three-phase measurements with external CTs with 5 A secondary with two relays outputs.
QE-POWER-T	
	Three-phase power meter developed in 17,5 mm thickness. UNIVERSAL input for current transformers (1/5 A, 333 mV, Rogowski), RS485 Modbus output and digital contact. Available in three versions: **STANDARD**, **PLUS** and **PRO** (complies with the requirements for POWER QUALITY).

SINGLE AND THREE PHASE POWER METER

QC-POWER-T2

Three-phase AC / DC power meter with secondary at 5 A or 333 mV / Rogowski.
(TWO MODELS: QC-POWER-T2-V and QC-POWER-T2-I).
Graphic display 128 x 64 65536 colors.
RS485 Modbus.
Optional: Ethernet, Wi-Fi and Bluetooth.

AVAILABLE FROM 1Q 2020.

INEPRO PRO1 - PRO380 - MID

INEPRO PRO1 - PRO380 - MID
MID APPROVAL Single and Three phase Power meter with RS485 Modbus. Direct connection, 45 A for Single phase, 100 A for three phase.

QC-POWER-3PC

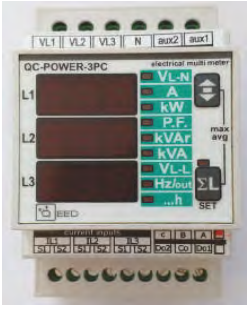

Bidirectional three phase power meter for external Cts with secondary at 5 A or three single phase meters. 3 DIN width, RS485 Modbus RTU.

QC-POWER-P96

Three phase Power meter and Network analyzer, 96 x 96 mm. Can be used with external CTs with secondary at 1 / 5 A, RS485 Modbus and Digital contact available.
Harmonics analysis up to 31st and THD measurement.

QC-PM485

Single phase Power meter for direct connection up to 100 A. Backlighted Display, RS485 Modbus.

AC/DC SINGLE PHASE POWER METER

QI-POWER-485

Compliant to the CE standards:
EN61000-6-4/2006+ A1 2011;
EN61000-6-2/2005;
EN61010-1/2010.

MADE IN ITALY CE

	QI-POWER-485	QI-POWER-485-300	QI-POWER-485-LV	QI-POWER-485-300-LV
CURRENT MEASUREMENT	50 A AC/DC	300 A AC 400 A DC	50 A AC/DC	300 A AC 400 A AC
VOLTAGE MEASUREMENT	800 VAC 1000 VDC		80 VAC 100 VDC	
POWER SUPPLY	9...30 VDC Protection against polarity reversal and overtemperature			
ACCURACY	@ 25 °C up to 400 Hz Voltage, Current, Active Power: < 0,5% F.S. Frequency: ± 0,1 Hz on reading Energy: ± 1% on reading value V peak, I peak: ± 5% F.S.			
TYPE OF MEASURE	RMS (monopolar) or DC			
OUTPUT	RS485 MODBUS RTU			

AVAILABLE MEASUREMENT VIA RS485	I RMS, V RMS
	I peak, V peak
	P: Active Power (W)
	Q: Reactive Power (VAR)
	S: Apparent Power (VA)
	Frequency
	Cosφ
	THD
	Energy (kWh)
	Bidirectional Energy Totalizer (kWh), positive and negative
	min and max of all RMS value
WORKING FREQUENCY	DC or 1...400 Hz
SAMPLING RATE	12 kHz @ 50 Hz
CREST FACTOR	QI-POWER-485/ -LV: 1,8 QI-POWER-485-300/ -LV: 1,4
INPUT IMPEDANCE	1 MΩ ± 1%
OVERVOLTAGE PROTECTION	Category III up to 600 V, category II up to 1000 V Low Voltage version -LV: Category IV up to 100 V
ABSORPTION	< 1,3 W
BAUDRATE	from 1200...115200 Baud (standard 9600)

OTHER FEATURES:

WORKING TEMPERATURE	-15 °C...+65 °C
STORAGE TEMPERATURE	-40 °C...+85 °C
TEMPERATURE COEFFICIENT	< 200 ppm/°C
HUMIDITY	10...90% not condensing
ISOLATION	3 kV on bare wire for current measurement 4 kV on voltage input (reinforced isolation between power supply and RS485)
ALTITUDE	up to 2000 m s.l.m.
DIMENSIONS	46,1 x 63 x 26,4 mm (terminals excluded)
TERMINALS	Removable pitch 3,5 mm (n°1 da 4-way, n°2 da 2-way)
WEIGHT	80 g / 370 g
FILLING	Epoxy resin
PROTECTION INDEX	IP20
ENCLOSURE	Nylon vitrified V0
LED	n°1 Yellow (fixed = power on, blinking = in communication)
DIP-SWITCH	n°2 (for address and baudrate for configuration software FACILE connection)

CONFIGURABLE PARAMETERS:

	QI-POWER-485 / QI-POWER-485-LV	QI-POWER-485-300 / QI-POWER-485-300-LV
VIA DIP-SWITCH	Modbus address: 0 or 1 (address 1 for communication with configuration software)	
	Baudrate: 9600 or 38400	
VIA SOFTWARE	Energy measurement saved on flash memory	
	Frequency measurement on current channel	
	Modbus address	
	Baudrate: 2400...115200	
	CT and VT ratio setting	
	Cut off on current measurement (default 250 mA)	Cut off on the current measurement (default 1,5 A)
	Cut off on power measurement (default 0 W)	
	Measurement filter (fast...accurate)	
	Modbus delay answer setting	

AC/DC SINGLE PHASE POWER METER

QI-POWER-485

Compliant to the CE standards:
EN61000-6-4/2006+ A1 2011;
EN61000-6-2/2005;
EN61010-1/2010.

	QI-POWER-485-100	QI-POWER-485-100-LV
CURRENT MEASUREMENT	100 A AC/DC	100 A AC/DC
VOLTAGE MEASUREMENT	800 VAC / 1000 VDC	80 VAC / 100 VDC
POWER SUPPLY	9...30 VDC Protection against polarity reversal and overtemperature	
ACCURACY	@ 25 °C up to 400 Hz Voltage, Current, Active Power: < 0,5% F.S. Frequency: ± 0,1 Hz on reading Energy: ± 1% on reading value V peak, I peak: ± 5% F.S.	
TYPE OF MEASURE	RMS (monopolar) or DC	
OUTPUT	RS485 MODBUS RTU	

AVAILABLE MEASUREMENT VIA RS485	I RMS, V RMS
	I peak, V peak
	P: Active Power (W)
	Q: Reactive Power (VAR)
	S: Apparent Power (VA)
	Frequency
	Cosφ
	THD
	Energy (kWh)
	Bidirectional Energy Totalizer (kWh), positive and negative
	min and max of all RMS value
WORKING FREQUENCY	DC or 1...400 Hz
SAMPLING RATE	12 kHz @ 50 Hz
CREST FACTOR	1,5
INPUT IMPEDANCE	1 MΩ ± 1%
OVERVOLTAGE PROTECTION	Category III up to 600 V Category II up to 1000 V Category IV up to 100 V
ABSORPTION	< 1,3 W
BAUDRATE	da 1200...115200 Baud (standard 9600)

AC/DC SINGLE PHASE POWER METER

QI-POWER-485

OTHER FEATURES:

WORKING TEMPERATURE	-15 °C...+65 °C
STORAGE TEMPERATURE	-40 °C...+85 °C
TEMPERATURE COEFFICIENT	< 200 ppm/°C
HUMIDITY	10...90% not condensing
ISOLATION	3 kV on bare wire for current measurement 4 kV on voltage input (reinforced isolation between power supply and RS485)
ALTITUDE	up to 2000 m s.l.m.
DIMENSIONS	46,1 x 63 x 26,4 mm (terminals excluded)
TERMINALS	Removable pitch 3,5 mm (n°1 da 4-way, n°2 da 2-way)
WEIGHT	80 g / 370 g
FILLING	Epoxy resin
PROTECTION INDEX	IP20
ENCLOSURE	Nylon vitrified V0
LED	n°1 Yellow (fixed = power on, blinking = in communication)
DIP-SWITCH	n°2 (for address and baudrate for configuration software FACILE connection)

CONFIGURABLE PARAMETERS:

	QI-POWER-485-100 / QI-POWER-485-100-LV
VIA DIP-SWITCH	Modbus address: 0 or 1 (address 1 for communication with configuration software)
	Baudrate: 9600 or 38400
VIA SOFTWARE	Energy measurement saved on flash memory
	Frequency measurement on current channel
	Modbus address
	Baudrate: 2400...115200
	CT and VT ratio setting
	Cut off on current measurement (default 500 mA)
	Cut off on power measurement (default 0 W)
	Measurement filter (fast...accurate)
	Modbus delay answer setting

RESISTIVE DIVIDER

QE-BOX

QE-BOX

The QE-BOX is a resistive divider that allows to reduce the input voltage up to ± 2000 VDC to 1000 VDC.
To be used exclusively with the QI-POWER-485 and QI-POWER-485-300. Typical application is the measurement of string voltages to 1500 VDC in the photovoltaic sector.
In order to correctly read the voltage value on the QI-POWER you will need to modify the TV ratio when programming the power meter via the FACILE software or via Modbus registers.

Application:

PHOTOVOLTAIC:
measurement of string current and voltage.
The QI-POWER-485 is able to measure both on the DC side and on the AC side (inverter efficiency control).
Combined with the QI-50-V-485 it is possible to measure the single strings of current. With the QI-POWER-485-300 it is possible to measure the entire cassette (combiner). The instrument, communicates data via RS485 without the need for additional hardware.

VARIABLE FREQUENCY MEASUREMENT (INVERTERS):
the QI-POWER-485 can work at variable frequency, from DC up to 400 Hz. This feature makes it suitable for working under Inverter, managing to guarantee read precision even during modulation.

AC/DC MOTOR MEASUREMENT:
the QI-POWER-485 can work both in continuous and in alternating, so the instrument is suitable for applications on brushless motors and AC motors for measurements of power, P.F., absorption, THD, etc.

TELECOM SHELTERS:
the measurement of DC currents combined with 24/48 VDC voltages responds to the needs of monitoring battery groups in DATA CENTERS, SHELTERS for telecommunications, charge and discharge control of battery groups.

ARON CONNECTION:
for the three-phase applications without neutral, balanced or unbalanced, using only two QI-POWER-485 you can estimate the total power. To do this you need to have a master Modbus device that are able to make the formula below.

Three phase ARON connection diagram:

$$Q = \sqrt{3}(W_a - W_b)$$

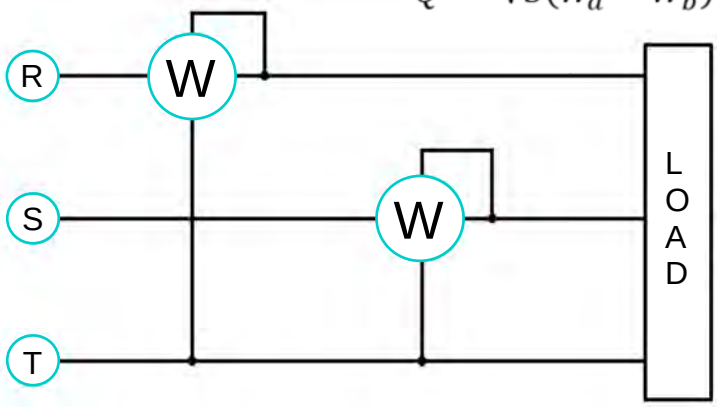

AC/DC SINGLE PHASE POWER METER VOLTAGE CURRENT CONVERTER

DATALOGGER VIA USB, ANALOG OUTPUT, DIGITAL OUTPUT, RS485

QA-POWER-M

Compliant to the CE standard:
EN61000-6-4/2006+ A1 2011;
EN61000-6-2/2005;
EN61010-1/2010.

MADE IN ITALY

AC/DC single phase power meter with direct connection (10 A - 600 VAC / 1000 VDC). Isolated voltage / current converter.

Fully configurable via USB, analog output, digital output (pulse or alarm contact).

RS485 Modbus RTU.

DATALOGGER via USB on standard pen-drive stick memory in .csv o excel compliant. Integrated RTC Real Time Clock.

	QA-POWER-M	QA-POWER-M-LV
POWER SUPPLY	10...40 VDC / 20...28 VAC - 50/60 Hz	10...40 VDC / 20...28 VAC - 50/60 Hz
INPUT (fully configurable)	VOLTAGE: up to 600 VAC / 1000 VDC	VOLTAGE: up to 60 VAC / 100 VDC
	CURRENT up to 10 A AC/DC (for higher current it is possible to use an external CT by setting the transformation ratio via software)	
ANALOG OUTPUT (fully configurable)	**CURRENT: 0...20 mA** (max load resistence 600 Ω), Active or Passive **VOLTAGE: 0...10 V** (min load resistence 2 kΩ) Matched to: V RMS, I RMS, Active power, Reactive, Apparent, Cosφ e Frequency Power supply on transmitted analog output @ 13 Vdc, 30 mA max	
SERIAL OUTPUT	**RS485 Modbus RTU** (from terminals and T-Bus connection)	
DIGITAL OUTPUT	**Free Contact, NA** for pulse output or contact alarm (matched with every parameters). Fully configurable.	
AVAILABLE MEASURES VIA RS485	I RMS, V RMS	
	I peak, V peak	
	P: active power (W)	
	Q: reactive power (VAR)	
	S: apparent power (VA)	
	Frequency	
	Cosφ	
	THD (on current channel)	
	Energy (kWh)	
	Bidirectional Energy Totalizer (kWh), positive and negative	
	min and Max of all RMS value	
SETTINGS VIA USB OR RS485	FACILE QA-POWER-M software (free download from QEED website) or directly by RS485 via Modbus registers	
ACCURACY CLASS	**0,5% F.S.** for all the measurement value	
WORKING FREQUENCY	DC or 1...400 Hz	
SAMPLE RATE	5000 sample per second	
ISOLATION	3-way: 4 kV for Voltage input, 1,5 kV between Power supply and Output	
FRONTAL DIP-SWITCH	Only for manual Modbus address and Baudrate setting	
ABSORPTION	Max 2,5 VA	
WORKING TEMPERATURE	-15 °C... +65 °C	
STORAGE TEMPERATURE	-40 °C... +85 °C	
THERMAL STABILITY @ 25°C	<100 ppm	

THREE PHASE POWER METER

QC-POWER-T

	QC-POWER-T-485	QC-POWER-RELE	QC-POWER-T-TA
POWER SUPPLY	230 VAC (-15%...+10%)		400 VAC (-15%...+10%)
WORKING FREQUENCY	50/60 Hz		
ABSORPTION	4 VA	7 VA	On Voltage channel: < 2,5 VA On Current channel: < 2,5 VA Power Supply: < 4 VA
CURRENT INPUT	TA X/5 (6) A		In =10 A; I max= 90 A
VOLTAGE INPUT	Direct connection up to 550 V RMS max (47...63 Hz)		V max = 440 V RMS (phase-phase) V max = 3 x 253 V RMS (phase- neutral)
ACCURACY:			
VOLTAGE	0,5% F.S. (dal 10%...100%); min 10 V		
CURRENT	0,5% F.S. (dal 10%...100%); min 20 mA		0,5% F.S. (dal 10%...100%)
ACTIVE POWER	1% F.S.		1% with F.S. Settable
REACTIVE POWER	1% F.S.		1% with F.S. Settable
POWER FACTOR	±1%		
FREQUENCY	± 0,1 Hz (47...63 Hz)		
ACTIVE ENERGY	CLASS 2		CLASS 1
REACTIVE ENERGY	CLASS 3		
CURRENT / VOLTAGE RATIO (TA / TV)	CONFIGURABLE BY DISPLAY		
OUTPUT	RS485 Modbus RTU	n°2 RELAYS OUTPUT 2 A-250 VAC	RS485 Modbus RTU
PEAK MEMORY	On display with date and time		Not available
WORKING TEMPERATURE	0 °C...50 °C		-10 °C ...45 °C
STORAGE TEMPERATURE	-20 °C...60 °C		-10 °C...60 °C
DIMENSIONS	4 DIN		7 DIN
PROTECTION INDEX	Frontal IP54 / Enclosure IP20		Frontal IP51 / Enclosure IP20
HUMIDITY	10...90% not condensing		

Compliant to the Community directives:
2006/95/CE (Low Voltage - LVD);
2004/108/CE (EMC) is declared with reference to the following standards:
Safety EN61010-1;
E.M Compability EN61000-6-2;
EN61000-6-4;
EN62052-21;
EN62053-23

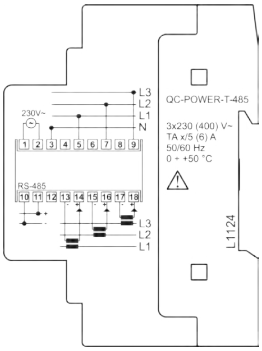

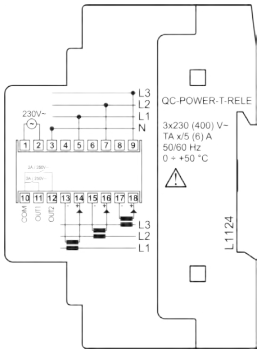

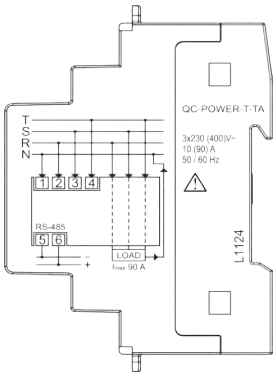

THREE PHASE POWER METER

QC-POWER-T2

Compliant to the Community directives:
2006/95/CE (Low Voltage - LVD);
2004/108/CE (EMC) is declared with reference to the following standards:
EN61010-1, EN 61010-2-030, EN61000- 6-2, EN61000-6-4, EN62052-21 and EN62053-23.

MADE IN ITALY

Three phase AC/DC Power meter with secondary at 5 A or 333 mV / Rogowski.

TWO MODELS:

- QC-POWER-T2-V;
- QC-POWER-T2-I.

AVAILABLE FROM 1Q 2020

	QC-POWER-T2
ACCURACY (@ 25 °C, 50 Hz)	
VOLTAGE (Un: 230/400 V)	± 0,5% RDG (10...100% Un)
CURRENT (In = 5 A or In =333 mV)	± 0,5% RDG (5...100% In)
FREQUENCY	± 0,1 Hz from 40 Hz to 70 Hz;
POWER	**ACTIVE**: ± 0,5 % RDG; **REACTIVE**: ± 0,5% RDG
ENERGY	**ACTIVE**: Class C according to EN 50470-1/3 or Class 0,5 S according to EN 62053-22 **REACTIVE**: Class 0,5 S according to EN 62053-24

OTHER FEATURES	
POWER SUPPLY	85 Vac - 265 Vac
FREQUENCY	50/60 Hz
ABSORPTION	< 2 W
SAMPLING RATE	6400 Hz @ 50 Hz
BAUDRATE RS485	da 1200...115200 Baud (standard 9600)
THERMAL DRIFT	< 100 ppm/°C
CURRENT INPUT	CT 5 A
VOLTAGE INPUT	CT 333 mV or Rogowski
WORKING TEMPERATURE	-10 °C...+60 °C
STORAGE TEMPERATURE	-20 °C...+85 °C
HUMIDITY	10... 90% not condensing
ALTITUDE	Up to 2000 m s.l.m.
PROTECTION INDEX	Frontal IP54 / Enclosure IP20
DIMENSIONS	4 DIN
MOUNTING	On DIN rail
TERMINALS	Screw connectors
COMMUNICATIONS	**DEFAULT:** RS485 Modbus RTU
	OPTIONAL: WiFi, Ethernet, Modbus TCP on Webserver
DISPLAY	Color display 320 mm x 240 mm with 65K resolution
DIGITAL OUTPUT	N°2 MOSFET OUTPUT: N°1 ALARM OUTPUT ON THRESHOLD; N°1 OUTPUT programmable optomos contact.
LOGGING	Via microSD (optional)

SINGLE AND THREE PHASE POWER METER MID APPROVAL

PRO1 - PRO380

Single phase Power meter Direct Connection -RS485 mod. PRO1.

Three phase Power meter Direct Connection - RS485 mod. PRO380.

Three phase Power meter with external CTs - RS485 mod. PRO380-CT.

Available measurement: Current, Voltage, Active Power, Reactive Power, Apparent Power, Total Energy and bidirectional Energy, Frequency, Power Factor , Totalizer for every Power measurement, bright pulse output S0.

	PRO1-MOD	PRO380-DC-MOD	PRO380-CT-MOD
DIMENSIONS	116 x 63 x 17,5 mm	140 x 63 x 70 mm	
MOUNTING	On DIN rail		
ACCURACY	According to EN 50470-3		
ACTIVE ENERGY	± 1 %		
MIN CURRENT MEASURE	0,05 Ib		
BASE CURRENT (Ib)	5 A		1,5 A
MAX CURRENT (I max)	45 A	100 A	6 A
WORKING CURRENT	0,4% Ib...I max		
OVERCURRENT	30 I max per 0,01 sec		
NOMINAL VOLTAGE (Un)	230 VAC	230/400 VAC	
WORKING VOLTAGE	100/173 V...270/468 V		
OVERVOLTAGE	4 kV for 1 minute		
PULSE OUTPUT S0	Configurable (T-on: 45 ms, T-off: 270 ms, T-t: 140 us)		
FREQUENCY	45...60 Hz		
HUMIDITY	≤ 75% (< 95% for storage)		
WORKING TEMPERATURE	-25 °C...55 °C	-40 °C...70 °C	-25 °C...55 °C
STORAGE TEMPERATURE	-30 °C ...70 °C	-40 °C...70 °C	-30 °C...70 °C
ABSORPTION	< 2 W...< 10 VA		
PROTECTION INDEX	IP51		
CONFIGURATION	By capacitive button on the device		

MID DIRECTIVE

Implemented at national level with the Legislative Decree no. 22/2007 is one of the new approach directives adopted by the European community. The aim of this approach is the definition of technical requirements and shared common, that allow you to move freely within the community tools.

Instruments which fit into this rule, have the CE mark, and it is important to mark that **the Directive relates solely to the design and manufacture of measuring instruments.**

THREE PHASE NETWORK ANALYZER - 17,5 mm

COMPLIANT POWER QUALITY REQUIREMENT

ALL-IN ONE CURRENT TRANSFORMER INPUT

QE-POWER-T

The smallest three phase network analayzer for all current probes. Ready to be connected with your monitoring/datalogger system. RS485 Modbus RTU and configurable digital contact available. All in one current transformers input and three versions to cover all of your needs.

MODEL	QE-POWER-T
CURRENT INPUT	1 A / 5 A Rogowski probe 0...333 mV

VERSION	STD	PLUS	PRO (Power Quality)
POWER SUPPLY	10...40 VDC o 19...28 VAC - 50/60 Hz		
VOLTAGE INPUT	Direct connection up to 500 V RMS max (40...70 Hz)		
	Transformation ratio for voltage tranformer (VT) and current transformer (CT) available		
OUTPUT	RS485 Mobus RTU and SPST digital contact (< 40 V, < 100 mA)		
AVAILABLE MEASURE	I RMS, V RMS		
	I pk, V pk per phase		
	P, P_1, P_2, P_3: active power (W)		
	Q, Q_1, Q_2, Q_3: reactive power (VAR)		
	S, S_1, S_2, S_3: apparent power (VA)		
	Frequency		
	Power factor (cosφ), total and per phase (inductive/capacitive)		
	Energy (kWh) total and per phase		
	Bidirectional Energy (kWh), positive and negative total and per phase		
	Active Energy and Reactive (kvarh), inductive/capacitive, total and per phase		
	Crest factor, total and per phase		
		Tanφ per phase and average (inductive/capacitive) Power Factor average, total and per phase	
		Power Factor distortion (inductive/capacitive) per phase/avg	
	–	THD (V, I)	
		Power measurement : min, average and max per phase and total	
	–	Monitoring phase sequence	
		Max demand over 15 minutes, total and per phase Time at which arises max demand (per month), total and per phase Time above a threshold, total and per phase Tempo oltre soglia impostabile, per fase e totale	
		K Factor (according to IEEE Standard 1100-1992)	
	–	–	Harmonics analisys up to 63th
	–	–	Interharmonics analysis up to 63th
	–	–	SAG / SWELL - voltage interruption

THREE PHASE NETWORK ANALYZER - 17,5 mm

COMPLIANT POWER QUALITY REQUIREMENT

ALL-IN ONE CURRENT TRANSFORMER INPUT

QE-POWER-T

ACCURACY (@ 25 °C, 50 Hz)	QE-POWER-T
VOLTAGE (Un: 230/400 V)	± 0,5% RDG (10...100% Un)
CURRENT (In= 5 A)	± 0,5% RDG (5...100% In)
FREQUENCY	± 0,1 Hz from 40…70 Hz;
POWER	**ACTIVE**: ± 0,5 % RDG; **REACTIVE**: ± 0,5% RDG
ENERGY	**ACTIVE**: Class C according to EN 50470-1/3 or Class 0,5 S according to EN 62053-22
	REACTIVE: Class 0,5 S according to EN 62053-24
OTHER FEATURES:	
ABSORPTION	< 500 mW @ 24 VDC
SAMPLING RATE	6400 Hz @ 50 Hz
BAUDRATE RS485	da 1200...115200 Baud (standard 9600)
THERMAL DRIFT	< 100 ppm/°C
WORKING TEMPERATURE	-10 °C...+60 °C
STORAGE TEMPERATURE	-20 °C...+85 °C
HUMIDITY	10...90% not condensing
ALTITUDE	Up to 2000 m s.l.m.
MOUNTING	On DIN rail, ready to be mounted on T-BUS system
CONNECTORS	REMOVABLE CONNECTORS n°3: 2-way, 3-way and 6-way with pitch 3,5 mm n°1: 4-way with pitch 5,08 mm
DIMENSIONS	93 x 17,5 x 68,3 mm (terminals excluded)
WEIGHT	60 g
DIP-SWITCH	2-way (address and baudrate) for connection with the configuration software FACILE
LED	n°5: POWER (green), COMM (yellow), TX and RX (red), Digital Contact (green)
STANDARD REFERENCES	EN 61000-6-2; EN 61000-6-4; EN 61000-4-2; EN 61000-4-3; EN 61000-4-4; EN 61000-4-5; EN 61000-4-6; EN 61010-1; EN 61010-2-30

QE-POWER-T + QE-BR-ETH485 (TCP-IP module)

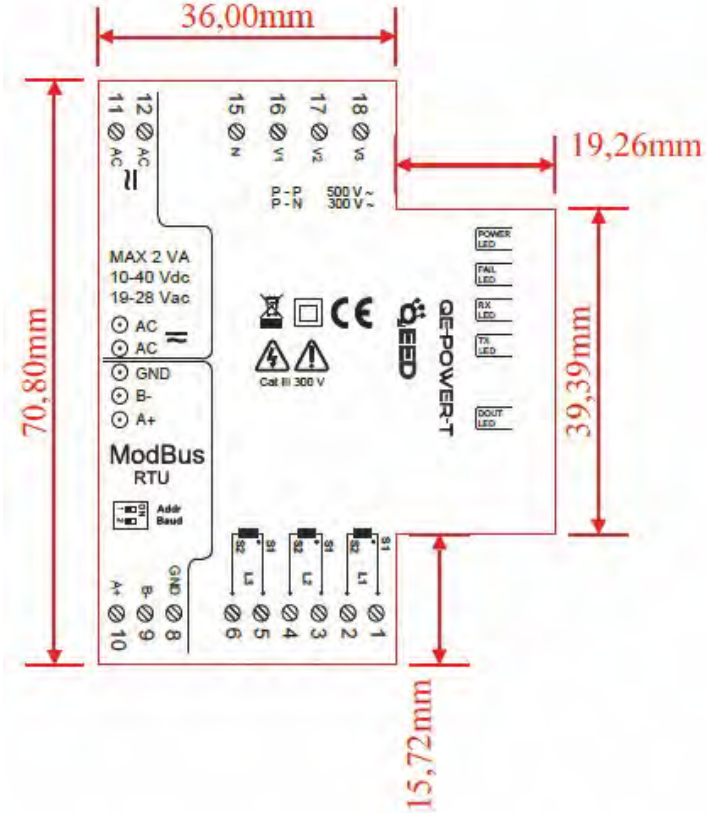

THREE PHASE POWER METER
BIDIRECTIONAL ENERGY
RS485 MODBUS RTU

QC-POWER-3PC

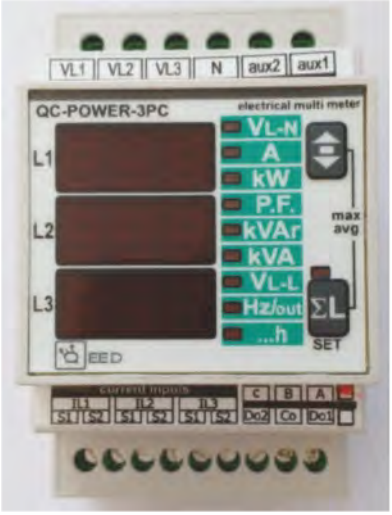

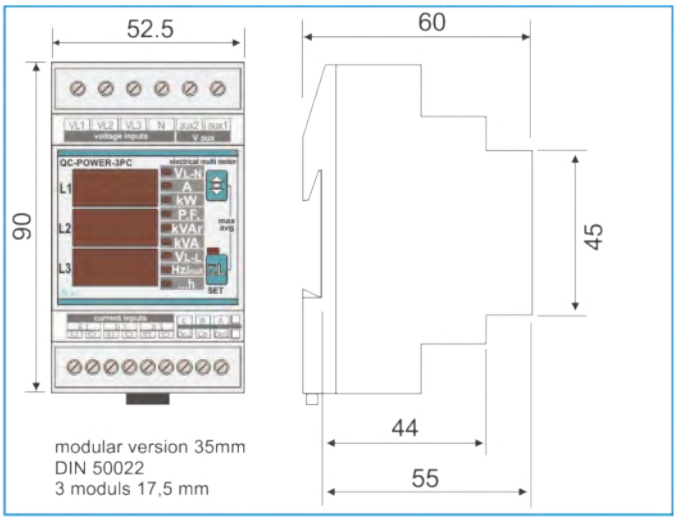

Compliant to the Community directives:
2006/95/CE (Bassa Tensione- LVD); 2004/108/CE (EMC) è dichiarata con riferimento alle seguenti norme armonizzate: EN61010-1, EN61000-6-2, EN61000-6-4, EN62052-21 e EN62053-23

	QC-POWER-3PC
POWER SUPPLY	230 VAC (± 15%)
WORKING FREQUENCY	50/60 Hz
ABSORPTION	max 3 VA
CURRENT INPUT	True RMS value of phase currents and three phase system value Range of measure: 0,02÷5 A true RMS digit – 40÷100 Hz
VOLTAGE INPUT	True RMS value of the phases voltages and phase to phase in a three phase system Total range of measure: 20÷500 V true RMS phase to phase - 380 V RMS phase-neutral - 40÷100 Hz
ACCURACY:	
VOLTAGE	0,5% F.S. (10%...100%); min 20 V - maximum values management
CURRENT	0,5% F.S. (10%...100%); min 20 mA - average and maximum values management
ACTIVE POWER	1% F.S. maximum, average and instantaneous values management
REACTIVE POWER	1% F.S. maximum, average and instantaneous values management
POWER FACTOR	±1%
FREQUENCY	± 0,5% (30...500 Hz)
ACTIVE ENERGY	Bidirectional CLASS 2 (IEC 1036) accuracy ± 1%
REACTIVE ENERGY	Bidirectional CLASS 2 (IEC 1036) accuracy: ± 1%
HOUR METER	Time metering in hours and decimal of hours Range of measure 0,0 ÷ 99999,9 h / accuracy ± 0,5%
OTHER FEATURES:	
CURRENT VOLTAGE RATIO (CT/VT)	Configurable from DISPLAY
OUTPUT	RS485 Modbus RTU (4800...19200 baudrate)
DISPLAY / KEYS	3 display with red LED 7,5 mm each of 3 digits 7 segments 2 keys for selecting measures and programming, LED bar 10 points
WORKING TEMPERATURE	-10 °C...60 °C
STORAGE TEMPERATURE	-25 °C...70 °C
DIMENSIONS	3 DIN
PROTECTION INDEX	Frontal IP52/ Enclosure IP20
HUMIDITY	10...90% not condensing

THREE PHASE POWER METER
PANEL MOUNTING - 96 x 96 mm

QC-POWER-P96

Panel mounting 96 x 96 mm Power meter and Network analyzer. RS485 Modbus RTU.

Current secondary at 1 A and 5 A. Class 1 accuracy for Energy measurement **THD and Harmonics analysis up to the 31st.**

Bidirectional Power and Energy measurement.
Pulse output.
Power supply 100-240 VAC @ 50-60 Hz.

	QC-POWER-P96
POWER SUPPLY	100...230 VAC (-15%...+12%) @ 50/60 Hz (± 5%)
ABSORPTION	less then 8 VA
CURRENT INPUT	Nominal 5 A AC (minimum 11 mA -max 6 A)
VOLTAGE INPUT	11...300 VAC (L-N) ; 19...519 VAC (L-L) - Category III
ACCURACY:	
VOLTAGE	0,5% F.S.
CURRENT	0,5% F.S.
ACTIVE POWER	1%
REACTIVE POWER	1%
POWER FACTOR	± 0,1%
FREQUENCY	± 0,1% (45...65 Hz)
ACTIVE ENERGY	CLASS 1
REACTIVE ENERGY	CLASS 1
OTHER FEATURES:	
TRANFORMATION RATIO (TA/TV)	Primary from 1/5 A to 10000 A and from 100 V to 500 kV configurable
OUTPUT	RS485 Modbus RTU and pulse (24 VDC max)
BAUDRATE RS485	From 300...19200 configurable
WORKING TEMPERATURE	-10 °C...55 °C
STORAGE TEMPERATURE	-20 °C...75 °C
DIMENSIONS	Panel mounting 96 x 96 x 55 mm
PROTECTION INDEX	Frontal IP54/ Enclosure IP20
HUMIDITY	10...90% not condensing
WEIGHT	318 g

Suitable to be used with Split Core current transformers QI-SC with secondary at 5 A.

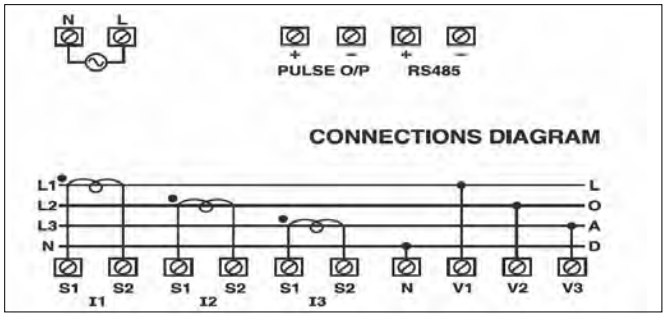

Suitable for 3 phases measurement and 3 phases + Neutral and single phase with two wires.

SINGLE PHASE POWER METER DIRECT INSERCTION

SERIAL OUTPUT RS485 MODBUS

QC-PM485

Single Phase Power Meter for direct connection up to 100 A. Serial output RS485 Modbus.

Class 1 Accuracy.

Measure available: **Voltage, Current, Active Power, Reactive Power, Apparent Power, Power Factor, Energy, Frequency.**

Metering for time slots.

Light pulse output 1000 imp/1 kW.

Power supply from the network.

	QC-PM485
POWER SUPPLY	230 VAC
ABSORPTION	≤8 VA ≤0,4 Wh
CURRENT INPUT	Direct connection 10 A typical, max 100 A
MIN CURRENT MEASUREMENT	0,004 Ib
AVAILABLE MEASURES	Voltage, Current, Frequency, Active , Reactive and Apparent Power, Power Factor, Energy
SERIAL OUTPUT	RS485 Modbus RTU
BAUDRATE	From 1200...9600 configurable (default 9600)
OUTPUT PULSE K	Led, 1000 pulse/kWh (lenght 90 ms)
WORKING TEMPERATURE	-20 °C...65 °C
DISPLAY	5+1 digit : 99999,9 kWh
DIMENSIONS	Mounting on DIN rail 44,6 x 72 x 18,2 mm
PROTECTION INDEX	IP51
HUMIDITY	10...90% not condensing
WEIGHT	100 g
STANDARD	IEC 62052-11, IEC 62053-21
CONFIGURATION	free configuration Software available on our website

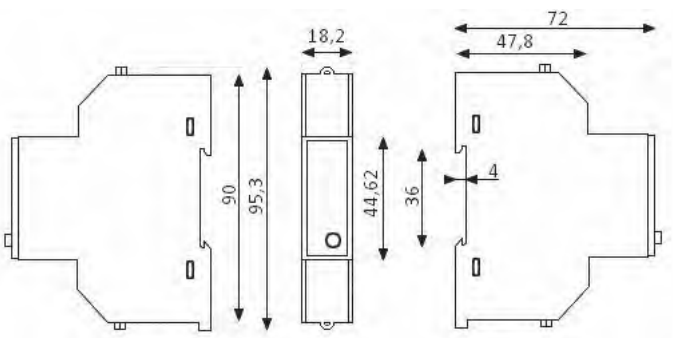

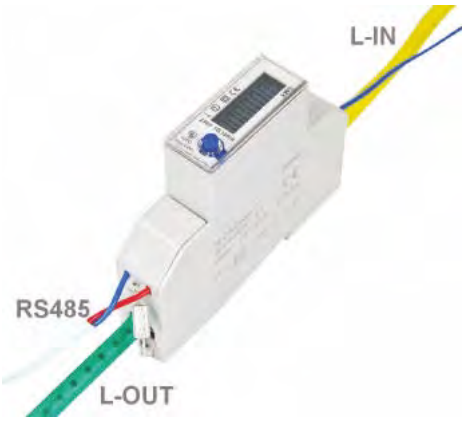

ISOLATED SIGNAL CONVERTERS
I/O SLAVE MODBUS RTU SYSTEMS

QA SERIES

QEED offer several solutions to cover your need to **ISOLATE** and **CONVERT** signals and to **ACQUIRE signals from field by MULTI-CHANNEL Slave Modbus I/O:**

- **QA-OMNI**: universal signal converter (voltage, current, temperature, resistence, potentiometer, universal digital input);
- **QA-TEMP**: universal temperature converter (RTD, TC, potentiometer, resistence);
- **QA-VI**: voltage /current converter;
- **QA-I**: current isolator;
- **QA-12DI-4DO**: I/O slave modbus for 12 digital input and 4 relays output;
- **QA-8DO**: I/O slave modbus with 8 relays output.

QA-OMNI / QA-TEMP / QA-VI

Common features for all these model:

- **DATALOGGER via USB** by standard pen-drive stick memory;
- **ANALOG OUTPUT** fully configurable;
- **DIGITAL OUTPUT**, SPDT 5 A 250 VAC relay fully Configurable;
- **READY TO BE MOUNTED** on T-BUS connection system;
- **CONFIGURATION** by free software "FACILE" available, by USB or RS485 connection.

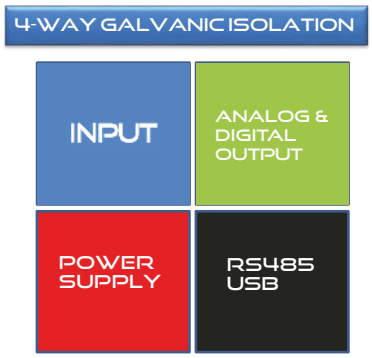

QA-12DI-4DO / QA-8DO

Common features for all these model:

- **HOT SWAPPING**, to install or replace the module without switch off the power supply;
- **SERIAL OUTPUT** RS485 Modbus RTU;
- **READY TO BE MOUNTED** on T-BUS connection system;
- **DIGITAL OUTPUT**, SPDT 5 A 250 VAC relay fully configurable;
- **CONFIGURATION** by software "FACILE" available, by USB or RS485 connection.

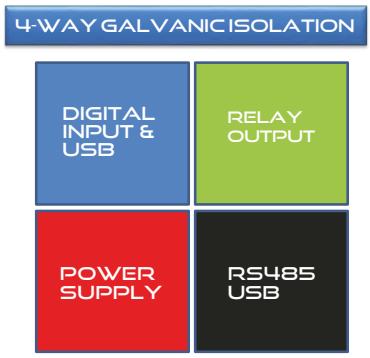

QA-I

Common features for all these model:

- **CURRENT ISOLATOR** (0...20 mA/0...20 mA);
- Current INPUT and OUTPUT can be ACTIVE or PASSIVE;
- **READY TO BE MOUNTED** on T-BUS connection system (only for power supply);
- **NO NEED ANY CONFIGURATION**.

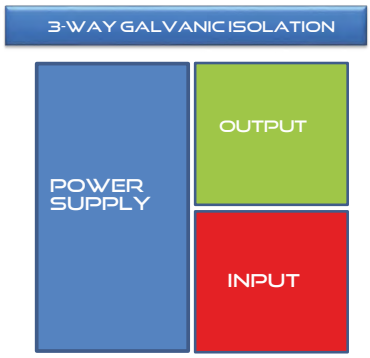

ISOLATED SIGNAL CONVERTERS
MULTI-CHANNEL MODULES
I/O SLAVE MODBUS

QA SERIES

Compliant to the CE standards:
EN61000-6-4/2006+ A1 2011;
EN61000-6-2/2005;
EN61010-1/2010.

MADE IN ITALY CE

	QA-OMNI	QA-TEMP	QA-VI
POWER SUPPLY	10...40 VDC, 20...28 VAC @ 50/60 Hz		
ANALOG INPUT (fully configurable)	Voltage (up to 10 VDC) resolution 1 mV, input impedance 100 kΩ		Voltage (up to 10 VDC) resolution 1 mV, input impedance 100 kΩ
	Current (up to 20 mA), max resolution 2 µA, input impedance 20 Ω		Current (up to 20 mA), max resolution 2 µA, input impedance 20 Ω
	Temperature / Resistence **RTD**: PT100, PT500, PT1000, Ni100 (2, 3 or 4 wires) **TC**: J, K, R, S, T, B, E, N (-10 mV...+70 mV) Automatic detection of cable interruption	**Temperature / Resistence** **RTD**: PT100, PT500, PT1000, Ni100 (2, 3 or 4 wires) **TC**: J, K, R, S, T, B, E, N (-10 mV... +70 mV) Automatic detection of cable interruption	
	Potentiometer: 1 K... 10 kΩ	Potentiometer: 1 K... 10 kΩ	
DIGITAL INPUT (at the same time with analog input)	Frequency: 0,001 Hz…9,99 kHz Mechanical contact NPN 2 and 3 wires 3 wires PNP with power supply 24 V Namur Photoelectric Hall's sensors Variable reluctance Pulsed at 24 V TTL		
ANALOG OUTPUT (fully configurable)	**Current: 0...20 mA** (max load resistance 600 Ω) **Voltage: 0...10 V** (min load resistance 2 kΩ) Power supply on transmitted output: 13 VDC, 30 mA max		
SERIAL OUTPUT	RS485 Modbus RTU (from terminals and T-Bus)		
DIGITAL OUTPUT	**RELE' SPDT 5 A - 250 VAC** fully configurable		
ACCURACY CLASS	0,1% F.S.		
RESOLUTION	16 bit (15 + sign for TC)		16 bit
REJECTION	50/60 Hz		
THERMAL STABILITY @ 25 °C	< 100 ppm		
ISOLATION	4-way - 1,5 kV		
DATA LOGGING	Via standard USB stick memory		
CONFIGURATION	Software FACILE QA-OMNI	Software FACILE QA-TEMP	Software FACILE QA-VI
WORKING TEMPERATURE	-15 °C...+65 °C		
STORAGE TEMPERATURE	-40 °C...+85 °C		
HUMIDITY	10%...90% not condensing		
FRONTAL DIP-SWITCH	Only for manual setting of modbus address and baudrate		
DIMENSIONS	17,5 x 100 x 112 mm (terminals excluded)		

MANAGEMENT OF A TANK FILLING

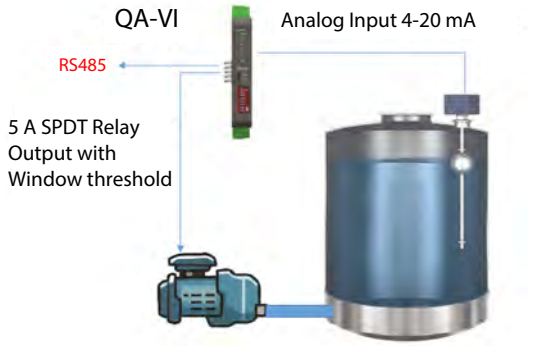

Using a QA-VI module is possible to acquire the analog output from a Level probe. The relay output of the QA-VI is an SPDT contact that allow you to set the working window (hysteresis included) of the level probe.
The SPDT relay will manage the start and the stop of the pump once the level probe will reach the upper limit setted on the module.
The QA-VI is ready to be connected via RS485 with an existing Remote Monitoring System. No need of other logics!

MONITORING AND MANAGEMENT OF AN ELECTRIC ACTUATOR

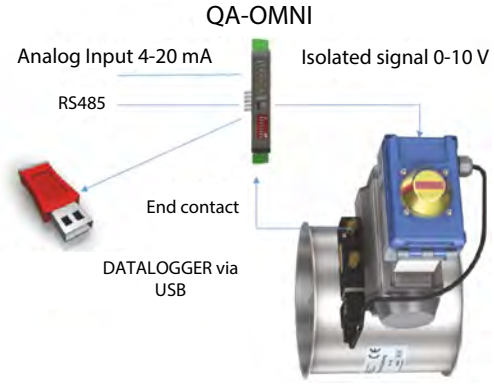

Using a QA-OMNI module is possible to acquire in the same time one analog input and one digital input.
For this application the customer required us to convert and isolate the drive signal for the actuator from 4-20 mA to 0-10 V.
We connected also the end contact of the actuator to the digital input of the board in order to TOTALIZE and LOG, on a USB stick memory, the cycles of the valve.
The QA-OMNI is ready to be connected via RS485 with an existing remote monitoring system, so the customer can plan in a better way the mainteinance activites of the plant.

TEMPERATURE MONITORING ON COLD STORE

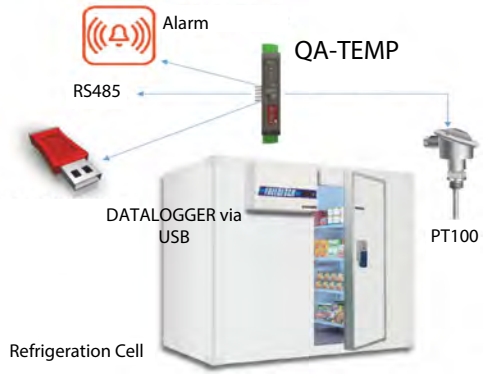

Using a QA-TEMP module it is possible to acquire and isolate the signal coming from a temperature probe. Through the USB memory stick, it is possible to store data (as required by current standard) in .csv format and download them as you like on your PC. A threshold can be set on the measured temperature value in order to trigger an alarm. The module is already set up for RS485 serial communication for integration with a monitoring system.

CONFIGURATION SOFTWARE "FACILE"

THE CONFIGURATION SOFTWARE "FACILE" ALLOW TO SET ALL THE PARAMETERS ON QA MODULES (THE INPUT AND OUTPUT MEASUREMENT RANGE, THE MODBUS SETTINGS, THE DIGITAL OUTPUT SETTINGS, THE LOG, ECC.).

ALL THE SOFTWARE ARE FREE AND CAN BE DOWNLOAD FROM OUR WEBSITE: **www.qeed.it**

I/O SLAVE MODBUS RTU SYSTEMS

MULTI-CHANNEL INPUT AND OUTPUT WITH SPDT RELAYS, RS485

QA SERIES

Compliant to the CE standards:
EN61000-6-4/2006+ A1 2011;
EN61000-6-2/2005;
EN61010-1/2010.

The I/O Slave Modbus QA are suitable to be used like expansions for the input/output in a master device (PLC, industrial PC and controllers, HMI, panel PC).

All the QA models can be connected with the T-Bus connectors, it allow you the connection for power supply and RS485 with the other devices. Hot swapping function (system reboot not required).

	QA-12DI-4DO	QA-8DO
POWER SUPPLY	10...40 VDC, 20...28 VAC @ 50/60 Hz	
ANALOG INPUT	n.d.	n.d.
DIGITAL INPUT	n°12 PNP with common negative 32 bit Totalizer Max Frequency 10 kHz	n.d.
ANALOG OUTPUT	n.d.	n.d.
DIGITAL OUTPUT	n°4 SPDT 5 A - 250 VAC Relays	n°8 SPDT 5 A -250 VAC Relays
SERIAL OUTPUT	RS485 Modbus RTU On Terminals or by T-BUS connection (on the bottom)	
ABSORPTION	2,5 VA max	
ISOLATION	4-way (1,5 kV)	
WORKING TEMPERATURE	-15 °C... +65 °C	
STORAGE TEMPERATURE	-40 °C... +85 °C	
HUMIDITY	10%... 90% not condensing	
ALTITUDE	Up to 2000 m s.l.m.	
MOUNTING	On DIN rail	
TERMINALS	Removable with pitch 5,08 mm	
DIMENSIONS	17,5 x 100 x 112 mm (terminals excluded)	
HOT SWAPPING	No need to switch off the system for the installation	
CONFIGURATION	By software FACILE QA-12DI-4DO (via USB or RS485) or directly by RS485 via Modbus registers	By software FACILE QA-8DO (via USB or RS485) or directly by RS485 via Modbus registers

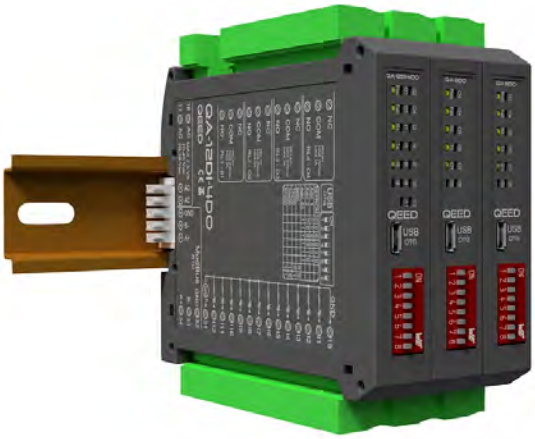

QA-12DI-4DO + QA-8DO

MODBUS SLAVE MODULES

MULTI-CHANNEL I/O SLAVE MODBUS

MULTI-DIGITAL INPUT WITH SERIAL OUTPUT RS485 (MODBUS)

QE-8DI

Compliant to the CE standards:
EN61000-6-4/2006+ A1 2011;
EN61000-6-2/2005;
EN61010-1/2010.

The multi-channel module QE-8DI is suitable to be used like expansions for the digital input in a master device (PLC, industrial PC and controllers, HMI, panel PC).

The QE-8DI can be connected with the T-Bus connectors, it allow you the connection for power supply and RS485 with the other devices.

Hot swapping function (system reboot not required).

	QE-8DI
POWER SUPPLY	10...40 VDC, 19...28 VAC @ 50/60 Hz
ANALOG INPUT	n.d.
DIGITAL INPUT	n°8 **PNP with common negative 32 bit Totalizer Max Frequency 10 kHz** **(5 Vdc output for detecting the optomos contact)**
ANALOG OUTPUT	n.d.
DIGITAL OUTPUT	n.d.
SERIAL OUTPUT	RS485 Modbus RTU On terminals or by T-BUS connection
ABSORPTION	1 VA max
ISOLATION	3-way (1,5 kV)
WORKING TEMPERATURE	-15 °C... +65 °C
STORAGE TEMPERATURE	-40 °C... +85 °C
HUMIDITY	10%... 90% not condensing
ALTITUDE	Up to 2000 m s.l.m.
MOUNTING	On DIN rail
TERMINALS	Removable with pitch 3,5 mm
DIMENSIONS	93 x 17,5 x 68,3 mm (terminals excluded)
HOT SWAPPING	No need to switch off the system for the installation
CONFIGURATION	By software FACILE QE-8DI (via USB or RS485) or directly by RS485 via Modbus registers

QE-8DI + QE-POWER-T + QE-BR-ETH485

MODBUS SLAVE MODULES

SERIAL CONVERTER BRIDGE MODBUS RTU TCP-IP MULTICLIENT

QE-BR-ETH485

Compliant to the CE standards:
EN61000-6-4/2006+ A1 2011;
EN61000-6-2/2005;
EN61010-1/2010.

The QE-BR-ETH485 is a multiclient bridge Modbus RTU to Modbus TCP.

- 17,5 mm module for DIN rail mounting Ethernet 10 Base-T / 100 Base-T
- Isolated between Serial RS485, Power Supply and Ethernet
- T-BUS connection for fast installation without wiring
- Up to 10 client connections
- Web Server configuration

	QE-BR-ETH485
POWER SUPPLY	10...40 VDC / 20...28 VAC
NETWORK INTERFACE	10/100 Base-T
RTU BAUDRATE	Up to 115200
MAX MODBUS NODES ALLOWED	247
STANDARDS	Compliant ETHERNET IEEE 802.3 and RS485
SERIAL PORT	**RS485 Modbus RTU** (on terminals or by T-BUS (on the bottom) **ETHERNET** Modbus TCP-IP (RJ45)
ABSORPTION	< 1 W
LED	Link/Activity Ethernet, RX-TX, Fail, Power Supply
WORKING TEMPERATURE	-20 °C... +60 °C
WORKING STORAGE	-40 °C... +85 °C
HUMIDITY	10%... 90% not condensing
CONFIGURATION	By Web Server (192.168.178.29 from ROM)
DHCP	Available by dip-switch setting
MOUNTING	DIN rail mounting
TERMINALS	Removable with pitch 3,5 mm
DIMENSIONS	93 x 17,5 x 68,3 mm (terminals exluded)

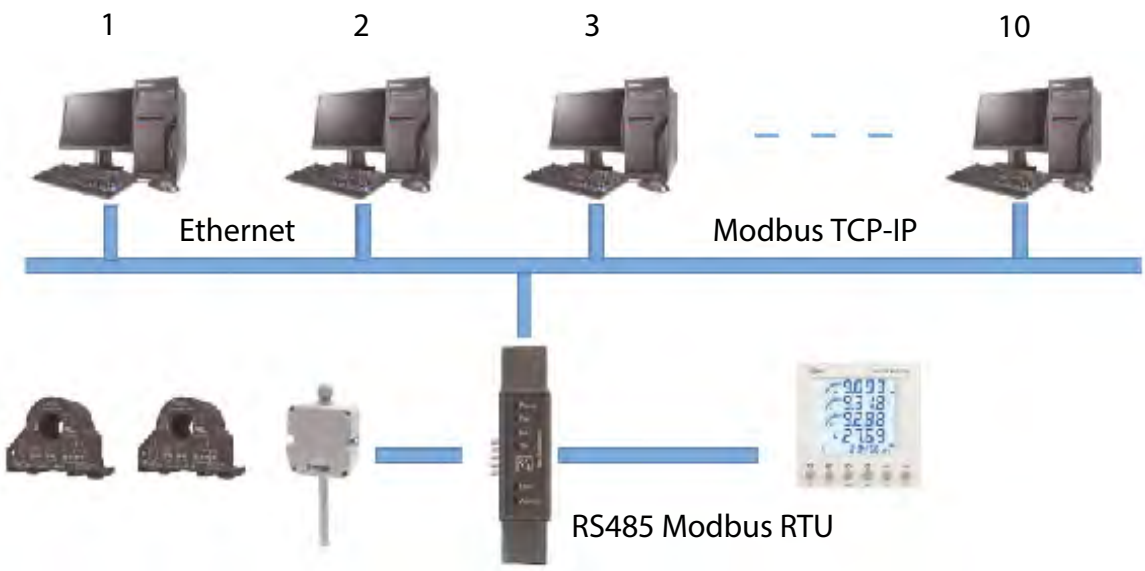

MODBUS/MQTT GATEWAY WITH DATA LOGGING

QE-MQTT-485

Compliant to the CE standards:
EN61000-6-4/2006+ A1 2011;
EN61000-6-2/2005;
EN61010-1/2010.

The QE-MQTT-485 is an industrial gateway with support for Modbus RTU / TCP and MQTT protocols.

- 17,5 mm module for DIN rail mounting
- Ethernet 10 Base-T / 100 Base-T
- Isolated between Serial RS485, Power supply and Ethernet
- T-BUS connection (for fast installation without wiring)
- Modbus RTU/TCP and MQTT
- Data logging on SD card
- Web Server configuration
- Over the Air firmware update available

AVAILABLE AFTER 4Q 2019

	QE-MQTT-485
POWER SUPPLY	10...40 VDC / 20...28 VAC
NETWORK INTERFACE	10/100 Base-T
RTU BAUDRATE	Up to 115200
MAX MODBUS NODES ALLOWED	247
STANDARDS	Compliant ETHERNET IEEE 802.3 and RS485
SERIAL PORT	**RS485 Modbus RTU** (on terminals) or by T-BUS (on the bottom) **ETHERNET** Modbus TCP-IP (RJ45), MQTT
ABSORPTION	< 1 W
LED	Link/Activity Ethernet, RX-TX, Fail, Power Supply
WORKING TEMPERATURE	-20 °C... +60 °C
WORKING STORAGE	-40 °C... +85 °C
HUMIDITY	10%... 90% not condensing
CONFIGURATION	By Web Server (192.168.178.29 from ROM)
DHCP	Via dip-switch setting
BROKER MQTT	Configurable (Amazon AWS default)
DATA LOGGING	On microSD card in .csv file format
MOUNTING	DIN rail mounting
TERMINALS	Removable with pitch 3,5 mm
DIMENSIONS	93 x 17,5 x 68,3 mm (terminals exluded)

DISPLAY

FOR MEASURES OF VOLTAGE, CURRENT, TEMPERATURE, TOTALIZERS AND ENCODER

Q-DISP

Complies with standards CE:
EN61000-6-4/2006+ A1 2011;
EN61000-6-2/2005;
EN61010-1/2010.

Display 96 x 48 mm for mounting on pannels, with the possibility to mount up to three output cards to choice (relay or analog).
Universal power supply in low or hight voltage. **Version totalizer/counter for bidirectional Encoder.**

	Q-DISP-T	Q-DISP-VI	Q-DISP-C
POWER SUPPLY	**H**: 85/265 VAC/DC **L**: 11...60 VDC, 24 VAC, 48 VAC		
DISPLAY (AT 7 SEGMENTS)	4 DIGIT (or 5 with the last number fixed at Zero)		6 DIGIT
MAXIMUM AND MINIMUM VALUE ON DISPLAY	Max: 9999 or 99990 min: -9999 or -99990		
TYPE OF INPUT	PT100 / RTD 2 o 3 wires, failure detection sensor. **Thermocouples** J, K, T, E, S, R, N, C, L, X, with failure detection sensor.	**Current**: ± 20 mA **Voltage**: ± 10 VDC Sensor power supply on field (selectable up to 20 VDC, 35 mA maximum)	Impulsive: Push-pull, NPN, PNP Namur Pick-up TTL Inductive Mechanical Bidirectionl Encoder Square waves
MODE OF WORKING	TEMPERATURE	VOLTAGE AND CURRENT	TOTALIZER (max 250 kHz) PERIOD METER (0,1...900 kHz) MEASURE OF THE AVERAGE (900 kHz max)
UPDATE TIME	3 times per second	15 times per second	100 times per second in totalizer mode
ACCURACY	Maximum error on the reading: PT100/RTD: < 0,2°C TC: < 2°C	0,05% +1 digit sul F.S.	Referring quartz oscillator ± 0,01%
CONFIGURATION	By front button (3) and jumpers on the back		
N° OF AVAILABLE OUTPUT	n°3 AVAILABLE SLOT OF OUTPUTS **-R**: Relay **-AO**: Analog output		
ABSORPTION	< 4 W		
WORKING TEMPERATURE	0°C... +50°C		
STORAGE TEMPERATURE	-20°C...+70°C		
INSULATION	2 kV for power supply L, 3,5 kV for power supply H		
DIMENSIONS	96 x 48 mm - depth 91 mm - MOUNTING ON PANEL		
PROTECTION INDEX	IP 54		
OTHER FUNCTIONS	Storage of maximum and minimum value		
	Protection password		
	Visualization step by step		
	Peak & Hold function		
	Linearization segment		
	Setting the intensity of the light		

ISOLATED SERIAL CONVERTER RS485-USB

Q-USB485

The **Q-USB485** is a serial converter **galvanically isolated up to 5 kV, based on chip USB FTDI**.
The simple use is guarantee by the **windows validation drivers** that you download automatically when you have your PC connected to the network .
This device allow you to connect in safety way to any Modbus devices on RS485.

Features:

- Max baud rate 500 kbit/sec
- Max common mode voltage (A+ / B-, input - output), –60 V / +60 V
- Removable connectors
- Transparent housing to view led indicators: TX, RX, Supply

It is possible to download the driver directly from our website: http://www.qeed.it/category/software

TURNKEY CUSTOM ELECTRONIC BOARD EMS (ELECTRONICS MANUFACTING SERVICES)

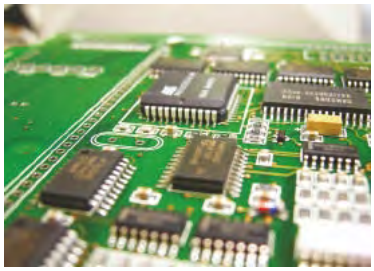

DEM S.p.A. is right partner to develop and produce your electronic boards.
The project needs four steps to do: development, production of CE omologation, production and post sales support.

1. **Development**
   - Find all technical informations;
   - fixing the technical specification of the project.
   - Drafting of a circuit diagram.
   - Design and production of printed circuit board prototypes.
   - Writing firmware
   - Internal functional test (to approval the technical specification).
2. **Consulting and certification**
   DEM will provide the complete package for the CE type-approval of the board.
3. **Production**
   Production capacity, with our production sites in Longarone (IT) and Pakrac (HR), reaches more than 50.000 electronic boards a week.
4. **Post sales support**
   DEM support the customers in all their needs, we train the customer to understand and manage all the situations with the electronic board.

EXAMPLES OF INSTALLATION

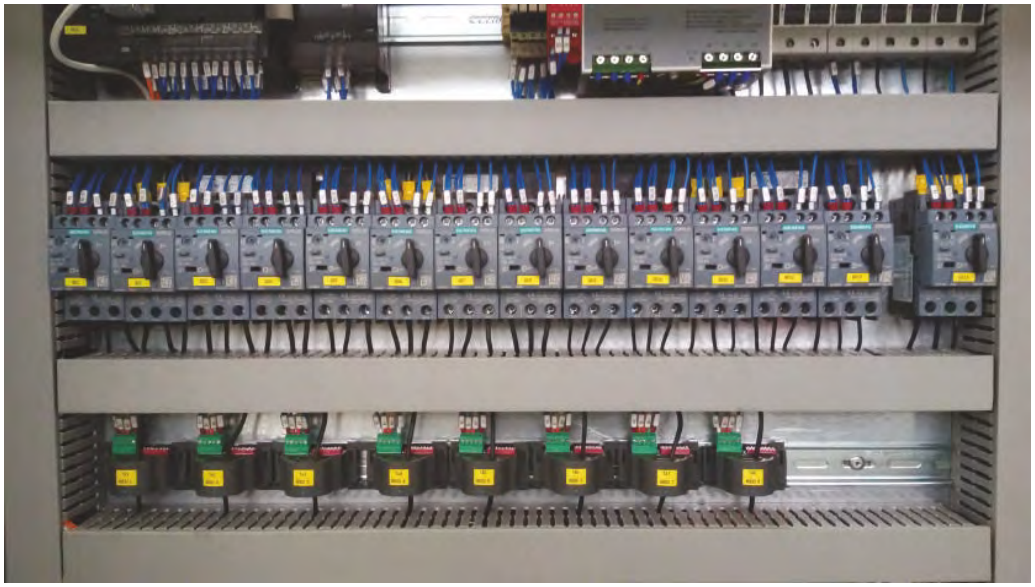

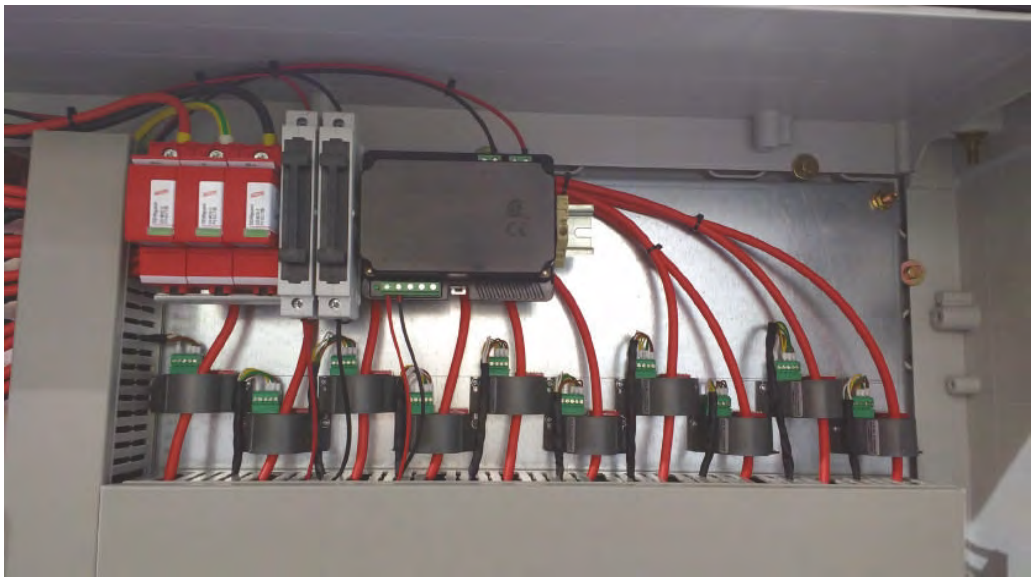

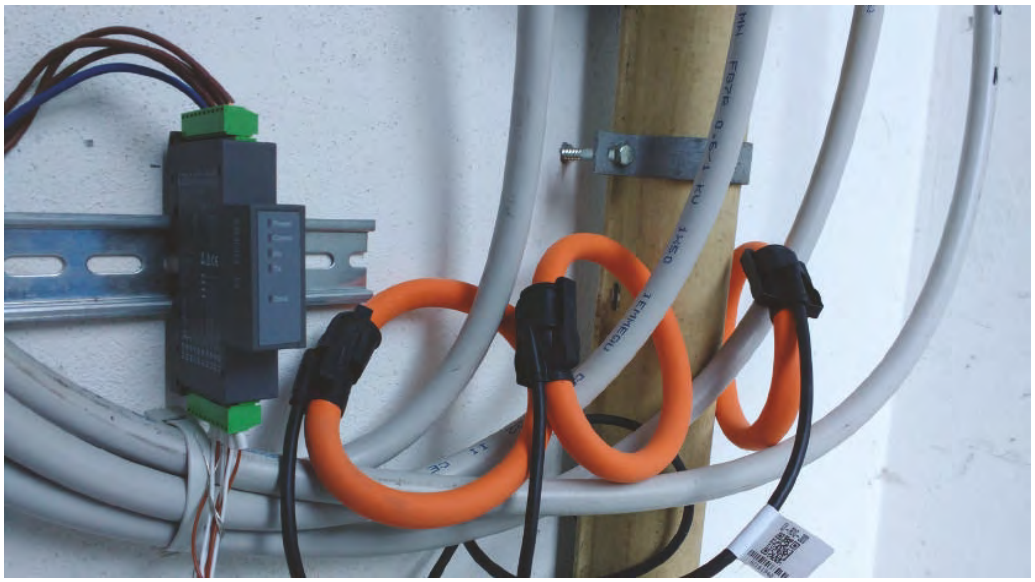

QEED

QUALITY ELECTRONIC DESIGN

Distribuited by:

MASTER CHIPS

WE MAKE THINGS WORK FOR YOU •

Industrielaan 4 • 9320 Erembodegem • Belgium

T +32 (0)56 22 36 73 • www.masterchips.eu

September 2019